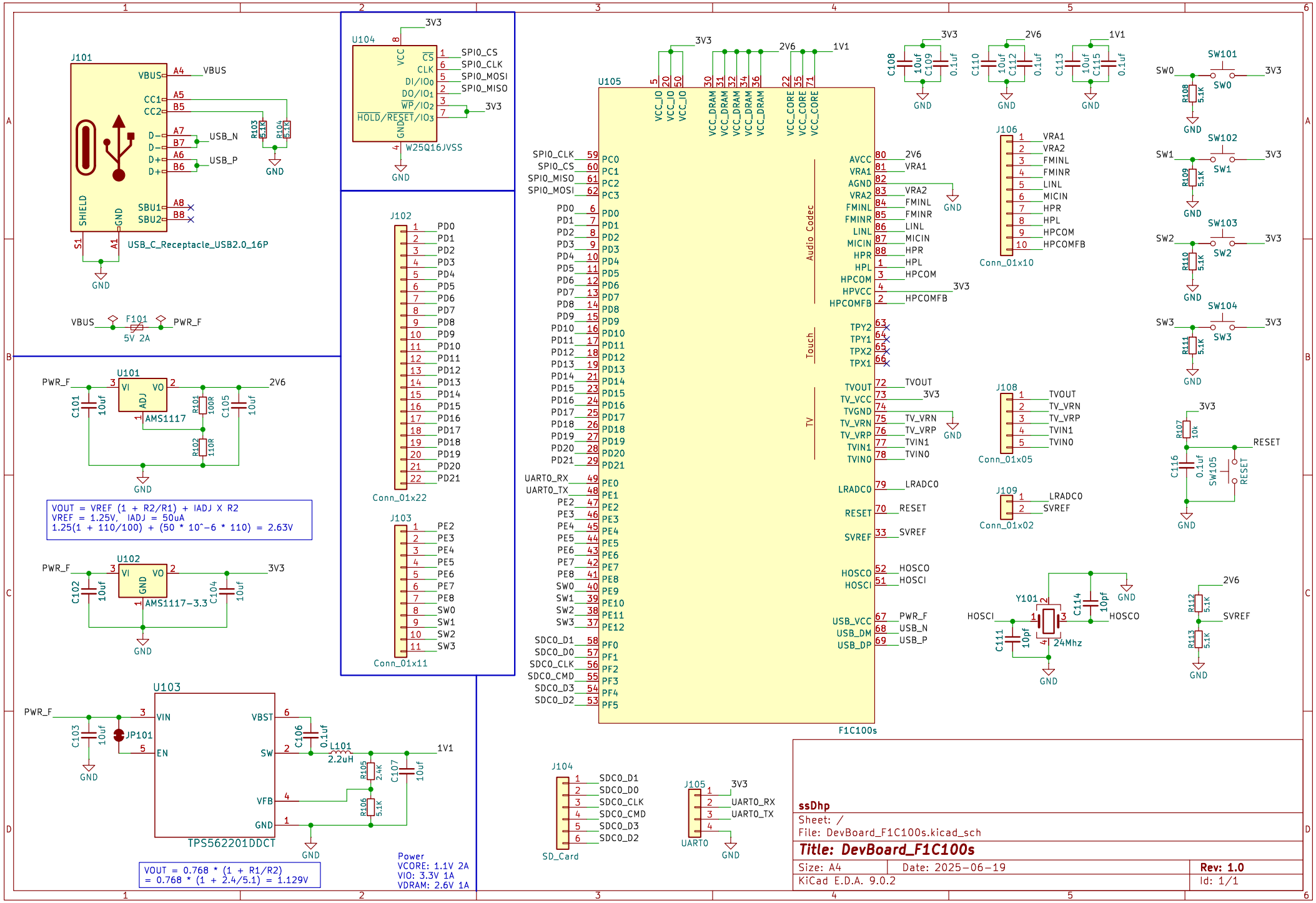
J101
USB_C_Receptacle_USB2.0_16P
VBUS
CC1
CC2
D-
D+
SHIELD
GND
SBU1
SBU2
USB_N
USB_P
R103 5.1K
R104 5.1K
F101
5V 2A
PWR_F
U104
W25Q16JVSS
SPI0_CS
SPI0_CLK
SPI0_MOSI
SPI0_MISO
3V3
J102
Conn_01x22
J103
Conn_01x11
U101
AMS1117
VI
VO
ADJ
2V6
C101 10uf
R101 100R
R102 110R
C105 10uf
VOUT = VREF (1 + R2/R1) + IADJ X R2
VREF = 1.25V, IADJ = 50uA
1.25(1 + 110/100) + (50 * 10^-6 * 110) = 2.63V
U102
AMS1117-3.3
C102 10uf
C104 10uf
U103
TPS562201DDCT
VIN
EN
VBST
SW
VFB
JP101
C103 10uf
C106 0.1uf
L101 2.2uH
R105 2.4K
R106 5.1K
C107 10uf
1V1
VOUT = 0.768 * (1 + R1/R2)
= 0.768 * (1 + 2.4/5.1) = 1.129V
Power
VCORE: 1.1V 2A
VIO: 3.3V 1A
VDRAM: 2.6V 1A
U105
F1C100s
Audio Codec
Touch
TV
VCC_IO
VCC_DRAM
VCC_CORE
AVCC
VRA1
AGND
VRA2
FMINL
FMINR
LINL
MICIN
HPR
HPL
HPCOM
HPVCC
HPCOMFB
TPY2
TPY1
TPX2
TPX1
TVOUT
TV_VCC
TVGND
TV_VRN
TV_VRP
TVIN1
TVIN0
LRADC0
RESET
SVREF
HOSCO
HOSCI
USB_VCC
USB_DM
USB_DP
PC0
PC1
PC2
PC3
PD0
PD1
PD2
PD3
PD4
PD5
PD6
PD7
PD8
PD9
PD10
PD11
PD12
PD13
PD14
PD15
PD16
PD17
PD18
PD19
PD20
PD21
PE0
PE1
PE2
PE3
PE4
PE5
PE6
PE7
PE8
PE9
PE10
PE11
PE12
PF0
PF1
PF2
PF3
PF4
PF5
UART0_RX
UART0_TX
SW0
SW1
SW2
SW3
SDC0_D1
SDC0_D0
SDC0_CLK
SDC0_CMD
SDC0_D3
SDC0_D2
C108 10uf
C109 0.1uf
C110 10uf
C112 0.1uf
C113 10uf
C115 0.1uf
J106
Conn_01x10
J108
Conn_01x05
J109
Conn_01x02
SW101
SW102
SW103
SW104
R108 5.1K
R109 5.1K
R110 5.1K
R111 5.1K
R107 10k
C116 0.1uf
SW105
Y101
24Mhz
C111 10pf
C114 10pf
R112 5.1K
R113 5.1K
J104
SD_Card
J105
UART0
ssDhp
Sheet: /
File: DevBoard_F1C100s.kicad_sch
Title: DevBoard_F1C100s
Size: A4
Date: 2025-06-19
Rev: 1.0
KiCad E.D.A. 9.0.2
Id: 1/1