Design and Implementation of an Embedded Solar Panel Fault Diagnosis System Using Load Perturbation Technique

Jegadeesan S
Department of Electronics and Communication Engineering
M.Kumarasamy College of Engineering
Karur, TamilNadu, India 639113
jegadeesanece@gmail.com

Vadivukarasi B L
Department of Electronics and Communication Engineering
M.Kumarasamy College of Engineering
Karur, TamilNadu, India 639113
vadivukarasi@gmail.com

Sanjay S
Department of Electronics and Communication Engineering
M.Kumarasamy College of Engineering
Karur, TamilNadu, India 639113
sanjaysece7@gmail.com

Rajeshwari E
Department of Electronics and Communication Engineering
M.Kumarasamy College of Engineering
Karur, TamilNadu, India 639113
rajeshwarie@gmail.com

Sabarsih G
Department of Electronics and Communication Engineering
M.Kumarasamy College of Engineering
Karur, TamilNadu, India 639113
sabarish1@gmail.com

***Abstract*—Abstract—This paper presents a smart embedded system for real-time monitoring and fault diagnosis of solar PV systems. The system integrates an INA219 sensor for precise voltage and current measurement with an ESP32 microcontroller for real-time processing. A MOSFET-based load perturbation mechanism actively probes system behavior, enabling accurate classification of faults including wiring issues, load anomalies, and panel degradation — unlike passive monitoring systems that merely collect data. Testing confirmed successful detection of all simulated fault conditions. The system provides an affordable, compact, and scalable solution with OLED display feedback and a live web dashboard, bridging the gap between simple monitoring and intelligent diagnostics.**

***Index Terms*—Solar monitoring, fault detection, embedded systems, perturbation analysis, photovoltaic systems.**

I. Introduction

The increasing demand for renewable energy has led to the widespread adoption of solar photovoltaic (PV) systems across residential, commercial, and industrial sectors. While solar energy offers a sustainable and clean alternative to conventional power sources, the efficiency and reliability of PV systems are significantly affected by various faults such as wiring issues, load mismatches, environmental degradation, and aging of panels. Early detection and accurate diagnosis of such faults are essential to ensure optimal system performance and reduce maintenance costs.

Conventional solar monitoring systems primarily focus on measuring electrical parameters such as voltage, current, and power. However, these systems often lack the capability to interpret data intelligently and identify the root cause of performance degradation. As a result, manual inspection is frequently required, leading to increased downtime and operational inefficiency. To address these limitations, there is a growing need for embedded systems that not only monitor performance but also provide intelligent fault diagnosis.

Inspired by advanced hybrid sensing architectures that integrate multiple detection mechanisms within a compact system , this work proposes an embedded solar panel diagnostic system based on a perturbation-driven approach. By combining real-time sensing with controlled load perturbation, the system evaluates dynamic responses to classify different fault conditions. The integration of low-cost sensors, microcontroller-based processing, and intelligent analysis enables a scalable and efficient solution for modern solar installations.

The proposed system aims to bridge the gap between simple monitoring and intelligent diagnostics, providing a practical and cost-effective approach for enhancing the reliability and performance of solar energy systems.

II. Literature Survey

There have been significant studies on monitoring and fault diagnosis in solar photovoltaic (PV) systems to improve efficiency and reliability. Traditional methods rely on measuring electrical parameters such as voltage and current using sensors like INA219 [1], combined with microcontrollers such as ESP32 for real-time processing [2]. However, these systems

are generally limited to basic monitoring and lack fault classification capabilities.

Mellit and Kalogirou [3] highlighted the importance of data-driven techniques for PV performance analysis, while Dhimish *et al.* [4] proposed fault detection methods based on I–V characteristics. Although accurate, these methods require complex instrumentation and analysis.

Gow and Manning [5] developed PV system models for behavior analysis, and Branker *et al.* [6] studied cost and performance aspects. Hardware implementations using MOSFETs [7] and circuit design principles [8] are also widely used for system control.

Recent work focuses on IoT-based monitoring systems [9], which provide remote access but mainly rely on passive observation. Hybrid sensing approaches [10] improve reliability by combining multiple sensing methods.

The proposed system builds on these works by integrating real-time monitoring with a perturbation-based diagnostic approach. Unlike conventional systems, it actively analyzes system response under controlled conditions, enabling efficient and accurate fault identification.

III. System Architecture

The proposed system is a modular embedded architecture which integrates sensing, control, and diagnosing units. The architecture allows real-time monitoring along with intelligent fault classification using a perturbation based approach.

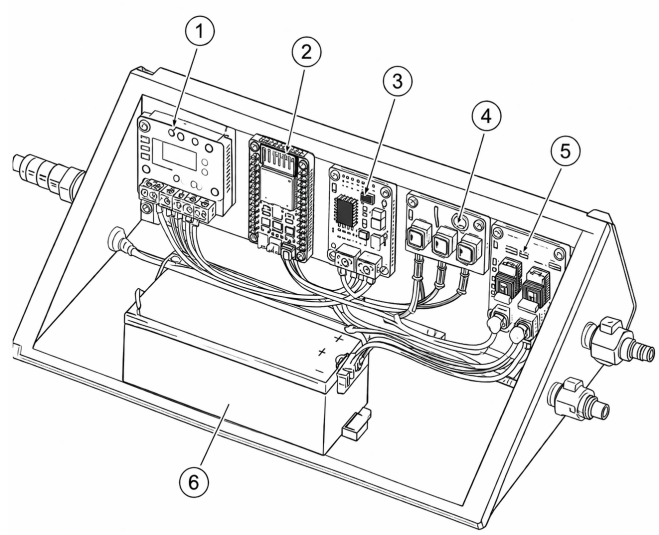

Fig. 1. Overall System Architecture

TABLE I
Components in System Architecture

Marker	Component Name
1	Charge Controller
2	ESP32 Microcontroller
3	INA219 Current & Voltage Sensor
4	LM2596 Buck Convertor
5	MOSFET (Load Perturbation Unit)
6	Battery

A. Overview

A solar panel connected through a charge controller, which regulates power delivery, is the system. A high-side sensing module is used to measure the electrical parameters, which are then processed by a microcontroller. To study the system response under controlled conditions, a load perturbation mechanism is included.

B. Measurement Unit

The unit for measurement handles the collection of electrical parameters on a real-time basis. It comprises an INA219 current and voltage sensor that functions on an I2C communication interface.

The sensor measures:

- Bus voltage of the solar system
- Load current flowing through the circuit
- Instantaneous power consumption

Such information serves as the foundation for baseline modeling and fault detection.

C. Processing Unit

The control unit uses the ESP32 microcontroller as its core that is responsible for gathering data, doing computations, and making decisions.

Its main functions are as follows :

- It performs sensor data reading via I2C
- It calculates power and baseline values
- It recognizes deviations from normal operation
- It manages perturbation mechanism
- It operates the display module

ESP32 is pretty powerful to do real-time embedded analysis.
.

D. Load Perturbation Unit

Load perturbation unit changes loads to system regularly so changes in the system can be measured accurately.

This unit consists of:

- IRLZ44N MOSFET (switching device)
- Power resistor (10Ω, 5W)
- Control signal from ESP32

Temporary loading by using MOSFET is done so that changes in voltage and current under normal and stressed conditions are measured.

E. Load Unit

Load element in the form of a 12V automotive bulb is used. Besides giving a visible indication of system performance, it also aids in the verification of faults such as power interruption and instability.

F. Display Unit

An OLED display module is incorporated in the system for real-time display of system parameters and faults detected.

The information displayed includes:

- Voltage
- Current
- Power
- Fault status

This makes the user interface more enjoyable and also helps the system to be more easily understood.

G. Power Management Unit

The system is operating using the controlled supply indirectly obtained by solar system via the buck converter module. In order to get stable 5V output for ESP32 and other components, the LM2596 voltage regulator was used.

In order to obtain accurate results and keep the system stable, proper grounding and isolation were carried out.

IV. Working Principle

The suggested system relies on continuous monitoring, baseline modeling, and fault diagnosis based on perturbations for its operation. The working mechanism is split up into several steps to get fault detection and classification right.

tikz

A. Overview of Operation

The system keeps track of the electrical parameters of the solar panel setup all the time. A baseline performance is established, and any deviation from this baseline triggers a diagnostic process. Controlled disturbances are used to investigate the system's reaction and locating faults.

B. Baseline Performance Modeling

During normal work, the system uses the sensing unit to get voltage and current. The instantaneous power is calculated as:

$$P = V \times I \tag{1}$$

A baseline power value is established by averaging multiple readings:

$$P_{baseline} = \frac{1}{N} \sum_{i=1}^{N} V_i I_i \tag{2}$$

This baseline is the normal condition performance the system will be expected to output.

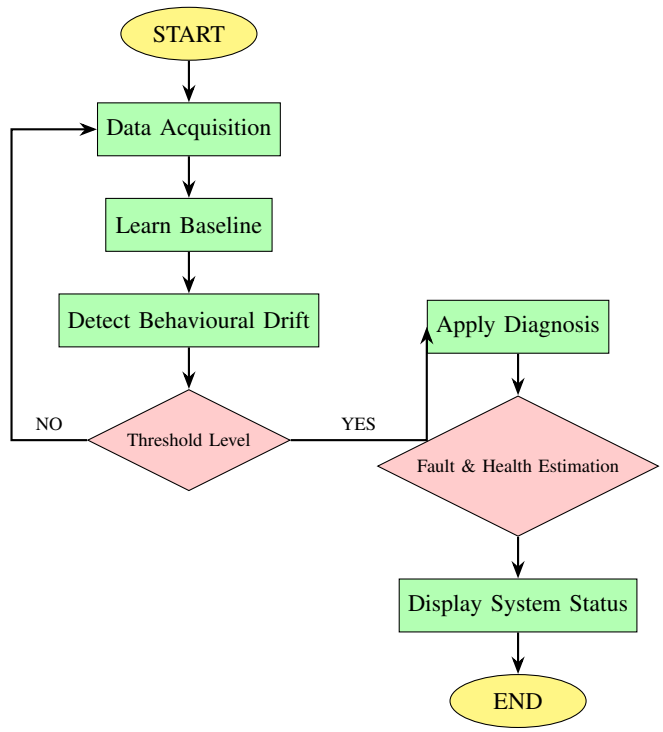

Fig. 2. Flowchart of the Proposed SOL-NODE System

C. Deviation Detection Mechanism

The system keeps checking the live power versus the baseline value:

$$\Delta P = P_{baseline} - P_{current} \tag{3}$$

If the difference goes beyond a set level, the system perceives that a fault has occurred and enters the diagnosis phase.

D. Perturbation-Based Diagnostic Method

The proposed method for fault classification is to generate a small perturbation in the load by the introduction of a MOSFET-based switching circuit as the load switch whose control is the only source of fault classification. Changing the load conditions will be a brief moment and the system will be able to see the dynamic changes in voltage and current as a result.

The response of the system is analyzed in terms of:

- Voltage drop characteristics
- Current variation
- Recovery behavior after perturbation

In a way, this technique is similar to active probing techniques of top-class sensing systems where the response of the system reveals what is going on inside.:contentReference[oaicite:1]index=1, where system response reveals internal conditions.

E. Fault Classification Strategy

The classification of various faults by the response is as follows:

1) Wiring Fault:

- Sudden and significant voltage drop
- Load fails to operate (bulb OFF)
- No recovery after perturbation

2) Load Fault:

- Increase in current beyond expected range
- Unstable power output
- Partial voltage fluctuation

3) Panel Degradation:

- Gradual reduction in power output
- Reduced voltage under load conditions
- Slower recovery after perturbation

F. Real-Time Monitoring and Display

The system keeps refreshing the measured parameters and diagnostic output on the OLED screen. It actually serves as a gives the user instant feedback and helps identifying the situation of the system very quickly.

V. Hardware Design

The hardware of the proposed system is designed to provide accurate sensing, reliable processing, and stable power management within a compact embedded module. The system integrates multiple functional units, each responsible for a specific operation.

A. Processing Unit

The ESP32 microcontroller serves as the core processing unit of the system. It is responsible for acquiring data from the sensor, executing the monitoring and fault detection algorithm, and transmitting data to the cloud platform. The ESP32 is selected due to its built-in Wi-Fi capability, low power consumption, and ability to handle real-time processing efficiently.

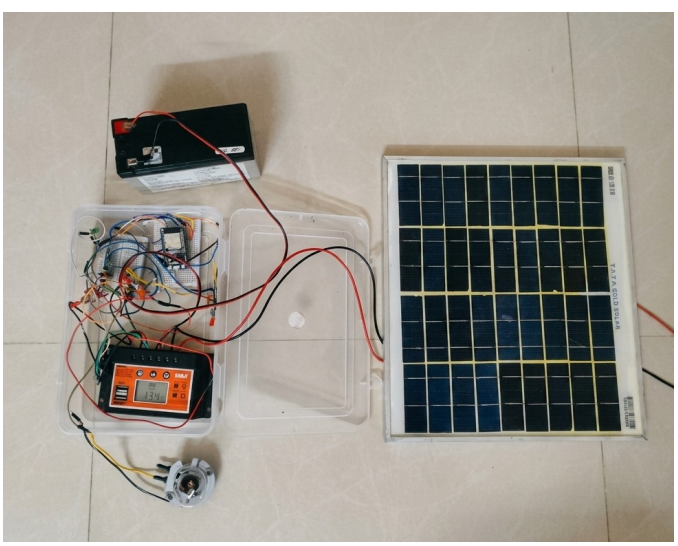

Fig. 3. HARDWARE

B. Measurement Unit

The INA219 current and voltage sensor is used to measure electrical parameters in real time. It is connected in series with the load, allowing it to measure bus voltage and current accurately. The sensor communicates with the ESP32 using the I2C protocol, ensuring efficient and reliable data transfer.

C. Power Management Unit

A DC-DC buck converter (LM2596) is used to regulate the voltage supplied from the solar charge controller. It steps down the input voltage to a stable 5V output required for the ESP32 and other components. This ensures safe operation under varying input conditions.

D. Diagnostic Unit

The system incorporates a MOSFET-based switching mechanism to introduce controlled perturbations. This allows the system to analyze variations in voltage and current during abnormal conditions, enabling effective fault diagnosis.

E. Energy Storage Unit

An internal rechargeable battery is used to power the system, ensuring uninterrupted operation even when solar input is low or unavailable. This enhances the reliability of the monitoring system.

F. Interfacing Unit

The system includes input and output terminals for integration with the solar charge controller and the load. These interfaces allow the module to be easily connected within the power path without affecting normal system operation.

VI. Software Algorithm

The suggested system brings together a smart edge gadget with a cloud-based monitoring platform for enabling immediate fault detection and system visualization. The software structure comprises three main layers: edge processing with the help of ESP32, backend processing with Python, and a web-based dashboard built using the latest frontend technologies.

A. System Initialization

On power-up, the ESP32 microcontroller configures all peripherals such as the INA219 current sensor and connects to the Wi-Fi. Initial baseline parameters like voltage, current, and power are first zeroed and then prepared for calibration in the learning phase.

B. Data Acquisition

The system draws live electrical parameters like voltage and current from the INA219 sensor in a continuous manner. Power is derived by the formula: P = V x I . These measurements are held briefly for subsequent actions.

C. Baseline Learning

When the load is steady, the device captures several instances of voltage, current, and power. A mean of the values is found to determine normal operating conditions. This norm serves as the baseline for comparisons later on.

D. Continuous Monitoring and Fault Detection

Real-time data are always evaluated against baseline data by the system. A sudden change in power over a set limit would be a sign of a fault in the system. However, if the change is within the limits, the system will keep

VII. Results and Analysis

The proposed system was subjected to tests under various operating conditions to measure its fault detection capability. Controlled faults were implemented through toggle switches, and the system response was monitored in terms of voltage, current, and power changes.

1) Normal Operating Condition Under normal conditions, the system stabilizes voltage and current simultaneously leading to steady power output. Baseline measurements depict no change, which means the system is functioning correctly.

Fig. 4. Battery Fault

Fig. 5. Wiring Fault

2) Wiring Fault Condition Breaking the current path was the main way to introduce a wiring fault. A sudden voltage drop and zero current made power output zero. The system test showed no signs of recovery, confirming a wiring fault.

3) Load Fault Condition A higher load made current consumption rise and voltage levels fluctuate. The unstable output power clearly showed a problem coming from the load.

Fig. 6. Load Fault

Fig. 7. Panel Fault

4) Panel Degradation Condition This was done by cutting the input supply. Voltage and current gradually decreased, resulting in the power output steadily getting less.

These findings demonstrate that the system is capable of distinguishing various fault situations properly.

VIII. Comparison with Existing System

TABLE II
Comparison Between Existing Systems and Proposed SOL-NODE

Parameter	Existing Systems	Proposed SOL-NODE
Monitoring Approach	Passive monitoring of parameters	Active monitoring with diagnosis capability
Fault Detection	Requires external analysis	Real-time on-device detection
Fault Diagnosis	Complex or not available	Simple perturbation-based method
Cost	High due to advanced equipment	Low-cost implementation
Processing	Cloud or external processing	Local processing using ESP32
Real-time Capability	Limited	Fully real-time operation
Remote Access	Available in some systems	Web dashboard with live updates
Hardware Complexity	High and bulky	Compact and modular design
Ease of Deployment	Complex installation	Easy integration into existing systems
Scalability	Limited	Easily scalable

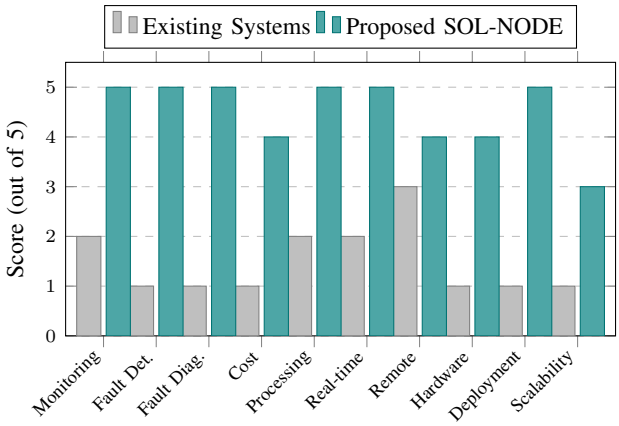

Fig. 8. Comparison of Existing Systems vs. Proposed SOL-NODE

IX. Discussion

The system introduced intends to illustrate a working and efficient method for fusing monitoring and diagnostic features of solar photovoltaic systems. It is a new design that separates from the traditional systems which depend only on passive observation and adds an active perturbation mechanism for the analysis of the system behavior in controlled conditions

1) Capability of Perturbation Technique In comparison to only recording static measurements, the perturbation method results in better fault detection by tracking the changes happening in the system. The method is capable of distinguishing faults clearly such as wiring problems, load changes, and panel degradation.

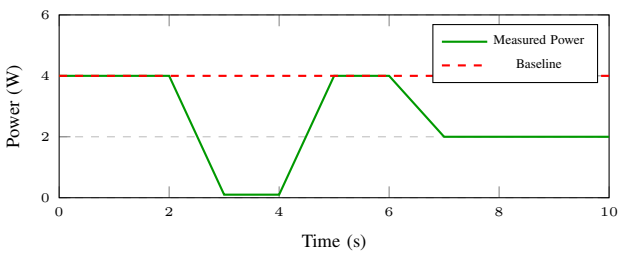

Fig. 9. Power deviation during fault perturbation

2) Dependability and Budget-Friendliness of the System Choosing cheap yet good-performing parts like ESP32 and INA219 is a method to keep prices low without sacrificing reliable production. The setup based on the modular principle allows the growth of the system at will for bigger solar units

3) Drawbacks At the moment, the system works under fairly controlled conditions. In actual situations, factors like weather temperature, partial shading, and dust may have an impact on the system's operations

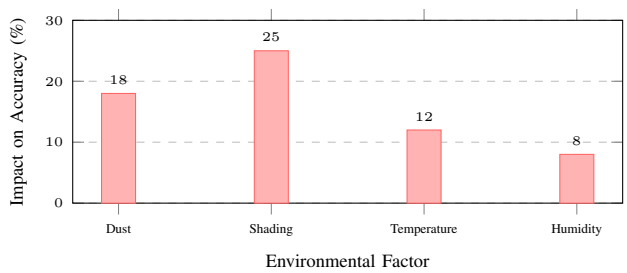

Fig. 10. Estimated impact of environmental factors on system accuracy

4) Prospective Development The system may be made better through the use of machine learning tools, monitoring on cloud, and recalibration methods that are self-adapting.

X. Conclusion

Here is a smart embedded system for monitoring solar photovoltaics in real-time and diagnosing faults. It combines sensing, processing, and diagnostic devices in a small, fast, and convenient package. Using an INA219 sensor to measure voltage and current accurately, with an ESP32 microcontroller to process information in real-time, the system can monitor solar panel performance and perceive any abnormal operations quickly.

One of the significant components of the study is the use of a perturbation diagnostics method. The creation of strain in the load through turn on and off by a MOSFET-based switching circuit has made it possible for the system to examine the responses dynamically and thereby to classify the faults accurately. This method can give a major advantage over the old monitoring systems that rely solely on observation and do not reveal the causes of performance loss.

Testing the prototype exposed the ability of the system to detect not only the occurrence of the faults in wiring but also the changes in loads of the panel as well as the aging of the panel. Loading a 12V bulb is a very unsophisticated yet highly visually effective way of demonstrating system behavior; thus, the system can serve for both demonstration and practical purposes. The real-time information is made available to the user by an OLED display making the device even more convenient to operate.

In summary, the system provides a very affordable, scalable, and environmentally friendly solution for solar power plant monitoring and fault diagnosis. This method fills the void between simple monitoring and sophisticated diagnostics, thereby increasing the dependability and decreasing the maintenance required. Upcoming studies might involve actual implementation, connection with IoT, and employing machine learning techniques for the prediction of failure and improvement of the overall system.

References

[1] Texas Instruments, "INA219 Zerø-Drift, Bidirectional Current/Power Monitor With I2C Interface," Datasheet, 2015.
[2] Espressif Systems, "ESP32 Technical Reference Manual," 2023. [Online]. Available: https://www.espressif.com
[3] A. Mellit and S. A. Kalogirou, "Artificial intelligence techniques for photovoltaic applications: A review," *Progress in Energy and Combustion Science*, vol. 34, no. 5, pp. 574–632, 2008.
[4] M. Dhimish, V. Holmes, B. Mehrdadi, and M. Dales, "Diagnostic method for photovoltaic systems based on I–V characteristics," *Renewable Energy*, vol. 105, pp. 274–289, 2017.
[5] J. A. Gow and C. D. Manning, "Development of a photovoltaic array model for use in power-electronics simulation studies," *IEE Proceedings - Electric Power Applications*, vol. 146, no. 2, pp. 193–200, 1999.
[6] K. Branker, M. J. Pathak, and J. M. Pearce, "A review of solar photovoltaic levelized cost of electricity," *Renewable and Sustainable Energy Reviews*, vol. 15, no. 9, pp. 4470–4482, 2011.
[7] IRLZ44N Power MOSFET Datasheet, International Rectifier, 2016.
[8] J. Carr and J. Brown, *Introduction to Electronic Circuit Design*, 2nd ed. New York, NY, USA: McGraw-Hill, 2001.
[9] A. K. Singh and S. Chandra, "Real-time monitoring and fault detection in solar PV systems using IoT," *International Journal of Renewable Energy Research*, vol. 10, no. 3, pp. 1200–1208, 2020.
[10] Hybrid CO_2–VOC Sensor System Design, Reference Paper Provided.