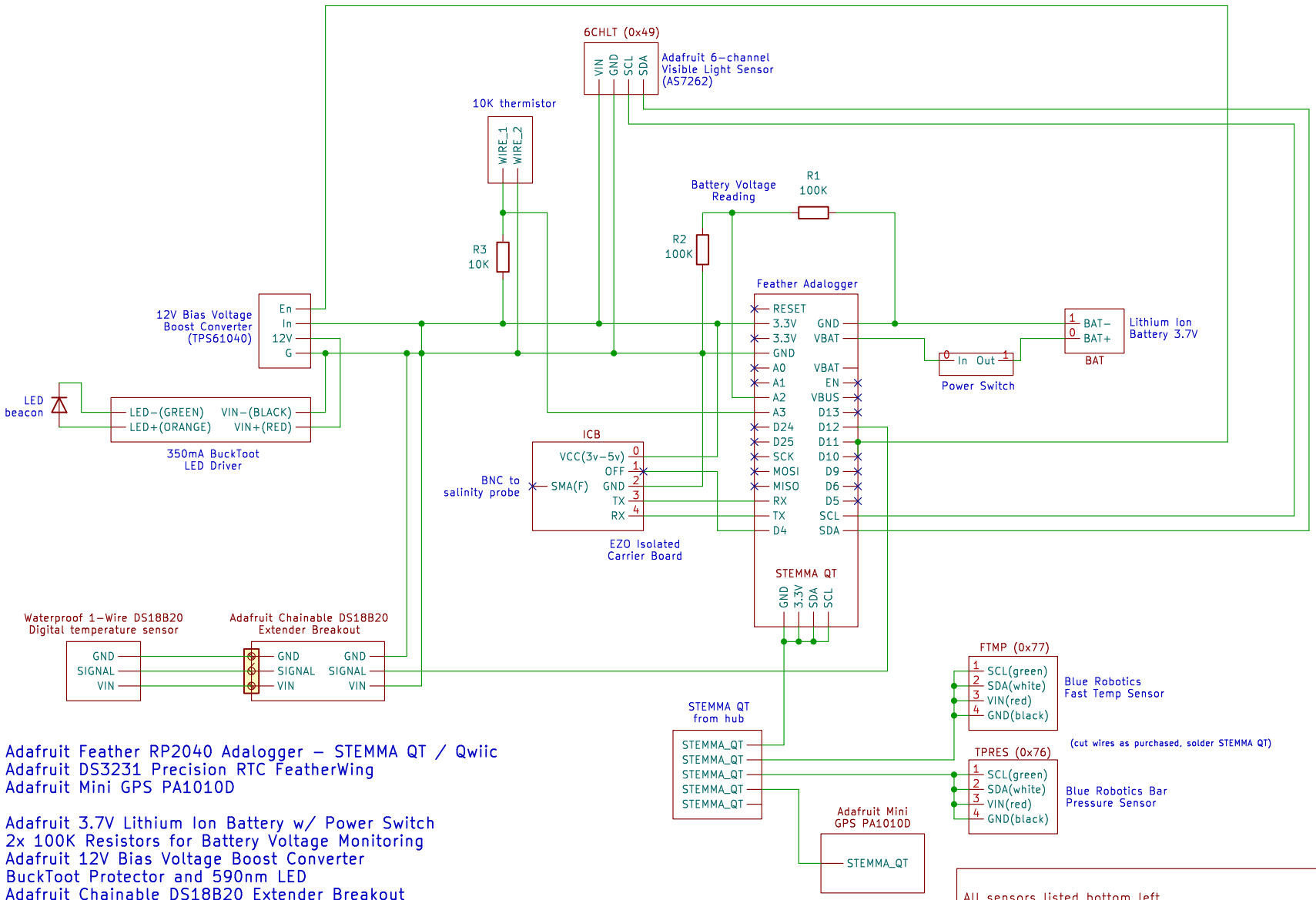

Adafruit Feather RP2040 Adalogger – STEMMA QT / Qwiic
Adafruit DS3231 Precision RTC FeatherWing
Adafruit Mini GPS PA1010D

Adafruit 3.7V Lithium Ion Battery w/ Power Switch
2x 100K Resistors for Battery Voltage Monitoring
Adafruit 12V Bias Voltage Boost Converter
BuckToot Protector and 590nm LED
Adafruit Chainable DS18B20 Extender Breakout

Blue Robotics Fast Temp
10k Thermistor w/ 10k Resistor
Adafruit Waterproof 1-Wire DS18B20 Digital Temp

Blue Robotics Bar02/Bar30/Bar100 Pressure

Atlas Scientific K 1.0 Kit Salinity

All sensors listed bottom left
STEMMA QT ports simplified
LED beacon on heatsink

Aspect Wave LLC

Sheet: /
File: SeaLabMOS.kicad_sch

Title: SeaLabMOS (all sensors)

Size: A4	Date: 2025-09-21	**Rev: 1**
KiCad E.D.A. 8.0.8		Id: 1/1