RECAP OF LESSON 1

RASPBERRY PI PIN DIAGRAM

WE ARE USING BROADCOM (BCM) PIN NUMBERING SYSTEM FOR OUR LESSONS. THE DEFAULT FOR gpiozero Library

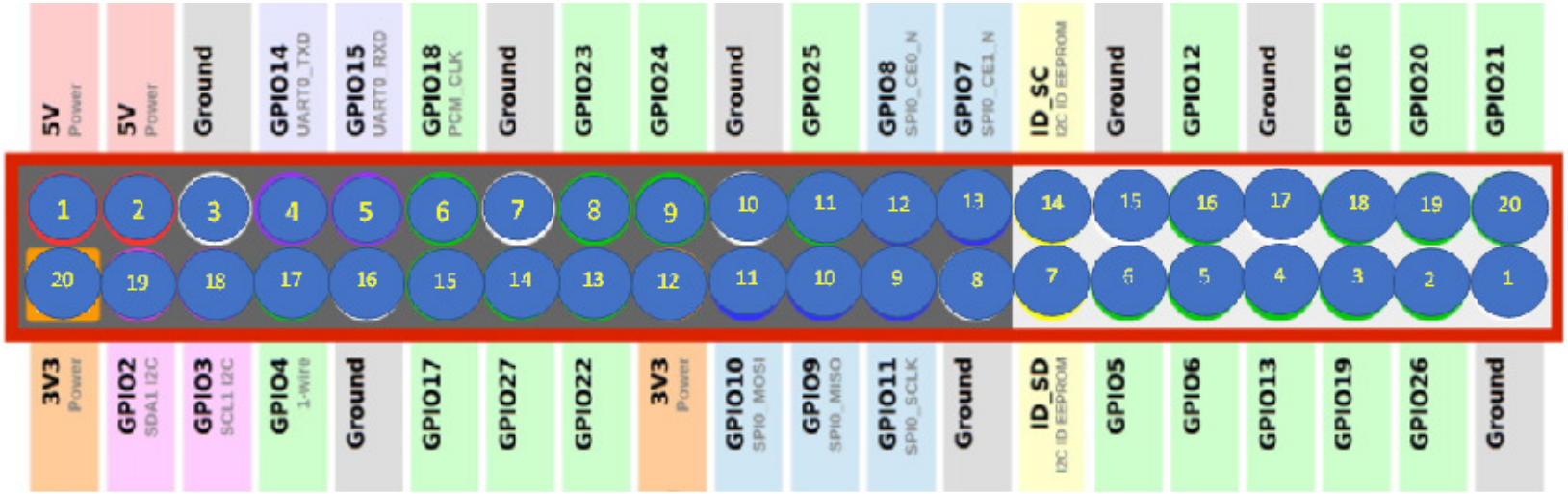

BOARD – PIN NUMBERING SYSTEM using RPi.GPIO Library

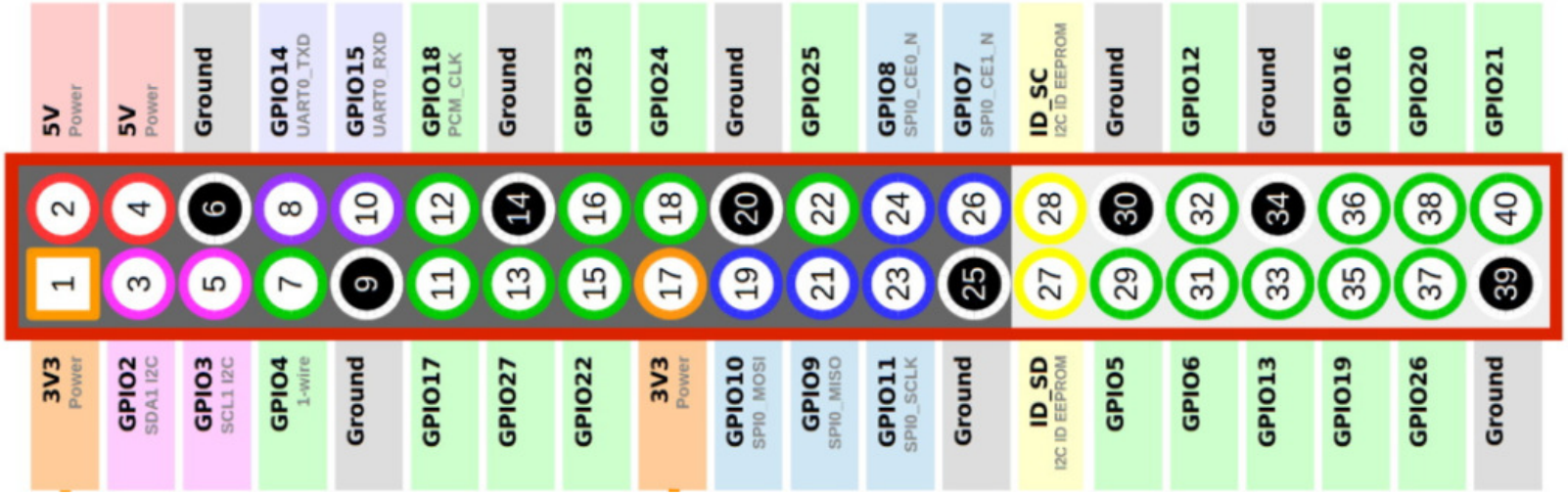

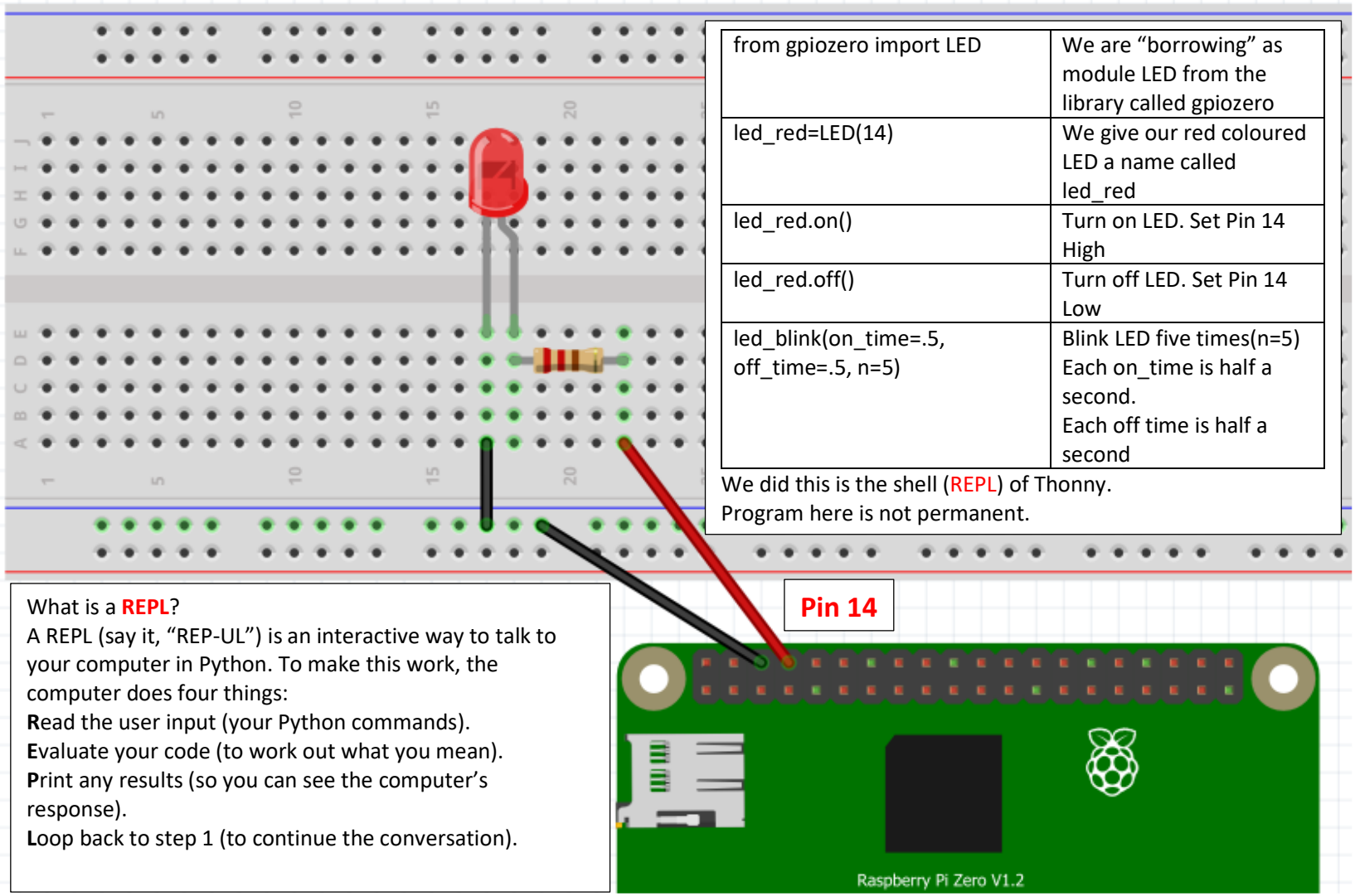

from gpiozero import LED	We are “borrowing” as module LED from the library called gpiozero
led_red=LED(14)	We give our red coloured LED a name called led_red
led_red.on()	Turn on LED. Set Pin 14 High
led_red.off()	Turn off LED. Set Pin 14 Low
led_blink(on_time=.5, off_time=.5, n=5)	Blink LED five times(n=5) Each on_time is half a second. Each off time is half a second

We did this is the shell (REPL) of Thonny.
Program here is not permanent.

What is a **REPL**?
A REPL (say it, “REP-UL”) is an interactive way to talk to your computer in Python. To make this work, the computer does four things:
Read the user input (your Python commands).
Evaluate your code (to work out what you mean).
Print any results (so you can see the computer’s response).
Loop back to step 1 (to continue the conversation).

PATROLCAR Example

patrolcar.py	**patrolcar2.py**
from gpiozero import LED from time import sleep red_led=LED(14) red_led.off() blue_led=LED(12) blue_led.off() while True: → red_led.blink(on_time=.1 , off_time=.1, n=5) sleep(1) blue_led.blink(on_time=.1, off_time=.1,n=5) sleep(1)	from gpiozero import LED from time import sleep red_led=LED(14) red_led.off() blue_led=LED(12) blue_led.off() **def flash():** red_led.blink(on_time=.1 , off_time=.1, n=5) sleep(1) blue_led.blink(on_time=.1, off_time=.1,n=5) sleep(1) while True: **flash()**
Indentation [TAB key]	*** **def flash():** is called a **python function**