AAN300784 (1/10)

Internal Use Only

LG Electronics

No	CTQ Name	Unit	Nominal	Tolerance +	Tolerance -	Target (Zst)
1	###	mm				
2						
3						

Dimension Type	Mark
General Dim.	None
Part Approval	■
MP Check	★
CTQ	<CTQ>

Applicable item (해당항목)		Mechanical Item	
		LG standard name	Standard No.
Incoming Inspection (수입검사)		Large Injected Parts Incoming Inspection (대형 사출물 수입검사 지침서)	LG(53)-G7-2013
		Large Press Parts Incoming Inspection (대형 Press물 수입검사 지침서)	LG(53)-G7-2014
		Small Injected Parts Incoming Inspection (소형 사출물 수입검사 지침서)	LG(53)-G7-2028
		Small Press Parts Incoming Inspection (소형Press물 수입검사 지침서)	LG(53)-G7-2101-01
		Base Assy Incoming Inspection (Base Assy 수입검사 지침서)	LG(53)-G7-2032
		Hanger(Wall mount) Assy Incoming Inspection (Hanger(벽걸이)Assy 수입검사 지침서)	LG(53)-G7-2044
		Insulation Sheet Incoming Inspection (Insulation Sheet 수입검사 지침서)	LG(53)-G7-2048
		Packing Incoming Inspection (Packing 수입검사 지침서)	LG(53)-G7-2019
		BOX Incoming Inspection (BOX 수입검사 지침서)	LG(53)-G7-2004
		Rubber Incoming Inspection (Rubber 수입검사 지침서)	LG(53)-G7-2046
		DECO Incoming Inspection (장식부(DECO)품 수입검사 지침서)	LG(53)-G7-2047
		ETC. Submaterial Incoming Inspection (기타,부자재 수입검사 지침서)	LG(53)-G7-2050
		Screw Incoming Inspection (Screw 수입검사 지침서)	LG(53)-G7-2102-01
		PE-Bag Incoming Inspection (PE-Bag 수입검사 지침서)	LG(53)-G7-2022
Part Approval (부품인정)	Post-process (후가공)	AL Extrusion Parts Approval Test Standard (Al 압출 부품 인정시험 표준)	LG(52)-G2-2056
		Die-casting Parts Approval Test Standard (Die-casting 부품 인정시험 표준)	LG(52)-G2-2057
		Press Parts Approval Test Standard (Press류 부품 인정시험 표준)	LG(52)-G2-2019
		Metal Material Approval Test Standard (Metal 원고재 부품 인정시험 표준)	LG(52)-G2-2059
		Mold parts approval Test standard (Mold 부품 인정시험 표준)	LG(52)-G2-2036
	Raw material (원소재)	Steel Parts Approval Test Standard (강판류 부품 인정시험 표준)	LG(53)-G2-2117-7
		Resin Parts Approval Test Standard (RESIN 부품 인정시험 표준)	LG(53)-G2-2084
	Part (부품)	Mold parts approval Test standard (Mold 부품인정 시험)	LG(52)-G2-2036
		Press Parts Approval Test Standard (Press 부품 인정시험 표준)	LG(52)-G2-2019
		Large Press Parts Approval Test Standard (대형 press 부품 인정시험 표준)	LG(53)-G2-2048
		Packing Parts Approval Test Standard (Packing 부품 인정시험 표준)	LG(52)-G2-2038
		Box Parts approval Test standard (Box 부품 인정시험 표준)	LG(52)-G2-2039
		Protection film parts approval test standard (보호 Film 부품 인정시험 표준)	LG(52)-G2-2015
		Insulation Sheet Parts Approval Test Standard (Insulation sheet 부품 인정시험 표준)	LG(53)-G2-2025
		Screw Parts Approval Test Standard (SCREW 부품 인정시험 표준)	LG(52)-G2-2012
	Assembly item (조립품)	Stand Assy Parts Approval Test Standard (STAND ASSY 부품 인정시험 표준)	LG(53)-G2-2089-9
		Wall Mount Ass'y Parts Approval Test Standard (벽걸이 Ass'y 부품 인정시험)	LG(53)-G2-2083

[지 정]
1. 본 도면 품 "01"을 나타내며, 상세 치수는 단품 도면 참조할 것.
2. 부품에 관한 상세 치수는 각 부품 도면을 참조할 것.
3. LG 전자 규격을 만족할 것.
4. 인쇄는 설계 지정 Film에 의할 것.
5. 양산 전 Sample 제출하여 설계 승인 득할 것.
6. 입고 전 묻힌 이물 및 Burr등 완전히 제거 후 입고할 것.
7. 사출물 외관 상태 : Weld Line, Sink Mark, Flash, Scratch등이 없을 것.
8. [ ]의 치수는 설계 인정 치수임.
9. ( )의 치수는 참고용 치수임.
10. C/SKD 공급용은 별도 지정된 포장방법을 적용할 것.
⚠ 11. 양산 사출시 오일류 사용불가 (이형제, 세척제, 방청제, WD40 등)

[NOTE]
1. This drawing indicates part number '01'.
   Detail shape and dimensions are referenced in the single part drawing.
2. Detailed dimension about part, Refer to drawing of each part.
3. Have to meet the specification of LG Electronics.
4. The artwork for printing is referenced film of TV ENG. Department.
5. Sample must be approved by LGE TV ENG. Department.
   Before proceeding with mass production
6. Before in storage, perfectly remove the dirties, burr etc.
7. Appearance condition of plastic parts :
   It has not to be Weld Line, Sink Mark, Flash, Scratch, etc.
8. Dimension in [ ] is design accepted dimensions.
9. Dimension in ( ) is referential dimension.
10. Use the specified packing method for the products for C/SKD.
⚠ 11. Oil cannot be used during mass production injection
   (mold release agent, cleaner, rust preventation product, WD 40, etc.)

<LG(53) G2-1026 "Sharp Edge Testing Standard(UL1439)"를 만족하지 못할 경우 사상 대응할 것.>
<If it isn't satisfy specification of LG(53) G2-1026
"Sharp Edge Testing Standard(UL1439), Must Remove the flash.>

▷ Sharp Edge Test Guide
외관 돌출면에 Sharp Edge Test시 종이가 찢어지는 현상이 없을 것.
단, 조립 후 소비자 손이 닿지 않는 곳은 Sharp Edge Test를 하지 않는다.
조립에 영향이 없고, 미세 Burr 발생면의 경우는 최소한의 사상(봉사상 혹은 칼/면 사상)만 진행한다.

The sharp edge test must be conducted on exposed areas.
After this test, a tear should not be found in testing papers.
However, testers do not need to perform this sharp edge test on areas where hands could not be reached.
In case of minor burrs which do not affect assembling, do the minimum trimming on them with blades or sticks.

[RoHS 지정]
본 부품의 환경유해물질은 LG(52) B-5011 규격의 Level A-I, A-II + SVHC 물질의 규제를 만족 할 것.
특히, 아기 내용을 필히 준수하고 관리할 것.
(1) 부품 인정시험 및 양산 조품 입고시 국가 공인기관의 환경유해물질관련
    시험 성적서를 제출할 것.
(2) Cr 6+ 를 사용하거나 포함되지 않도록 할 것.
(3) Resin의 Scrap 사용에 의한 환경 유해물질 유입이 없을 것.
(4) Metal의 불순물 또는 부적절품 사용에 의한 환경유해물질 유입이 없을 것.

[RoHS Specification]
Hazardous Substances on this product should be satisfied by substance regulation of Level A-I, A-II + SVHC according to LG(52) B-5011 standard.
Especially, Part should be followed and controlled the following specification.
(1) Eco-hazardous substances test report should be submitted
    when part certification test and First Mass Production.
(2) Don't use or contain Hexavalent chromium (Cr 6+).
(3) Don't flow Eco-hazardous substances into resin by using scrap.
(4) Don't flow Eco-hazardous substances into metal by using impurities or
    improper stuff.

*하기 VIEW 는 LEFT(A) ASSY 이며, RIGHT(B) ASSY 와 조립순서 동일

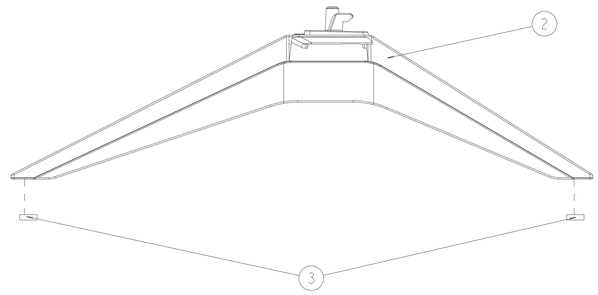

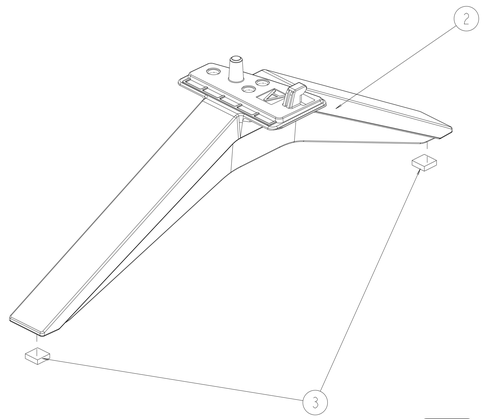

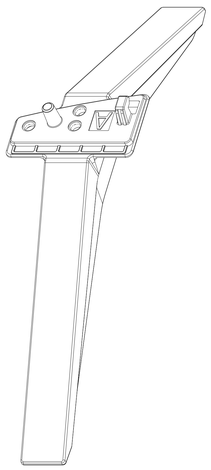

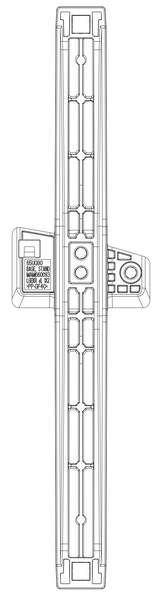

<Bottom View>

[작업 순서]

1. RUBBER(2 번부) 2EA 부착.

[WORKING SEQUENCE]

1. Attach the RUBBER(Part 2) 2 EA.

Rubber Adhesive Strength Test

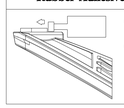

*Rubber 비접착.
-수평방향으로 3kgf/cm^2 이상일 것.

*Rubber Adhesive Strength.
-.should be more 3kgf/cm^2

[Rubber 부착시 주의 문구]
Rubber 부착시 모서리부에 부착하지 말 것.
Rubber 들뜸 없을 것

[Caution of Rubber Attachment]
When attached the Rubber, Don't over the edge attatching area.
Rubber should not be floating

DIMENSIONAL TOLERANCE								
DIM	0	>4	>12	>36	>120	>315	>1000	>2000
GRADE	4	12	36	120	315	1000	2000	
f	0.05	0.15	0.20	0.30	0.45	0.70	1.0	1.5
2	0.15	0.20	0.30	0.45	0.70	1.0	1.5	2.0
3	0.20	0.30	0.45	0.70	1.0	1.5	2.0	3.0
4	0.30	0.45	0.70	1.0	1.5	2.0	3.0	4.0
5	0.45	0.75	1.0	1.5	2.0	3.0	4.0	-
ANGULAR		90°	0		-			

UNLESS OTHERWISE SPECIFIED

SYM	DATE	REVD	ECNO	REVISIONS
⚠				
⚠	JUN.06.2024	Youngchul Lee	EKL0600388	Add a note related to the use of oils

This drawing belongs to LGE. The partes boarding it, correctly will be punished according to the relevant rules and the company regulations.

CONFIRM

SCALE	UNIT	
N/S	MM	
DESIGNED	CHECKED	APPROVED
CHO KYONG SIK	KIM DONG HYUN	SONG DONG SEOK
APR.18.2022	APR.21.2022	APR.26.2022

TITLE: BASE ASSEMBLY, STAND

65UQ79

LG Electronics Inc.

REF.DWG.NO.

APPD.TEST NO.

DWG.NO. AAN300784 (1/10)

AAN300784 (2/10)

Internal Use Only

LG Electronics

Stand Assy Spec.

	전/후 기울기 (The front and the rear slope)	좌/우 기울기, Rubber Gap(평탄도) [Right and left slope, Rubber gap(flatness)]
View	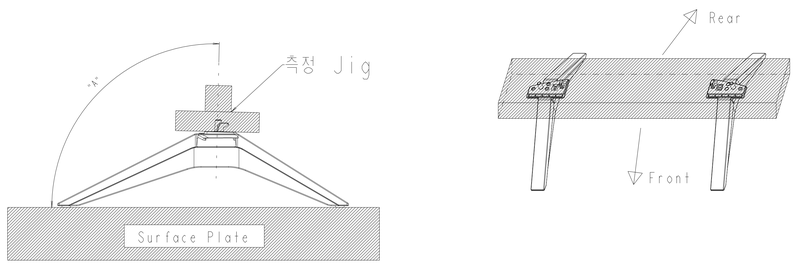	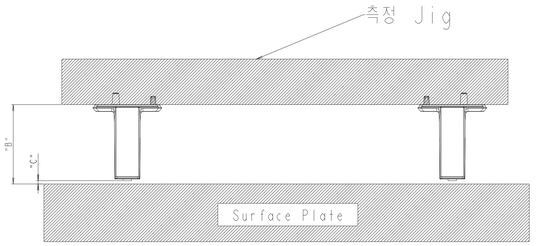
Spec.		"B" : 수직방향으로 1 Kgf 하중 가했을 때(총 2~3Kgf), 좌/우 편차 0.5 mm이하 만족할 것. -> 정면에서 Stand Body 좌우 외곽 최상단까지의 높이를 측정할 것. "C" : 수직방향으로 1 Kgf 하중 가했을 때(총 2~3kgf), 0~0.7 mm 이하 만족할 것. *지정된 Jig 적용하여 측정할 것. "B" : The left and right deviations when apply vertical force 1 Kgf(Total 2~3kgf) should be managed under 0.5 mm. -> Measure the height from a surface table to an upper-left and right side of stand body. "C" : When apply vertical force 1 Kgf(Total 2~3kgf) This size should be managed from 0mm to 0~0.7 mm. *Measure by indicated Jig.

Applying Stand Assy P/N	"A" Spec	Remark
AAN300784*	91.2 ± 0.3°	Stand assy 전/후 기울기("A") 측정 결과 상이 시, Jig 측정값 기준으로 전/후 기울기("E") 합부 판정할 것. 단, Jig가 없을 경우 연구소 지정 SET 기준으로 전/후 기울기("D") 합부 판정할 것. If the result of front & rear slope("A") are different to SPEC, pass or fail judgement will be made based on the result of Jig measurement("E"). If you don't usd Jig, you will use TV Set(Research verification TV SET).

2 Pole barcode Label

No	(d)	⚠(e)	Remark
1-1	60/65	LI/BL	Light Black
1-2	60/65	AS/BR	Ashed Brown
1-3	60/65	TI/GR	Titan Gray
⚠1-4	60/65	RO/BL	Rocky Black
⚠1-5	60/65	ES/GR	Essence Graphite

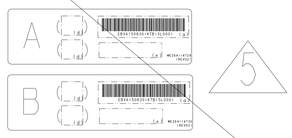

*Color of Label
MEZ64114729 : White
MEZ64114730 : Yellow

Set Spec.

	전/후 기울기 (The front and the rear slope)	좌/우 기울기 (Right and left slope)	⚠ Wobble
Set Spec.	90° -0/+1.8	30 인치 미만 : 좌우 편차 3.0mm 이하 30 인치 이상 : 좌우 편차 5.0mm 이하 (Deviation of Left and Right height) Under 30 inch : Under 3.0mm Above 30 inch : Under 5.0mm	15 Sec

Bag wrapping guide.

Packing Method

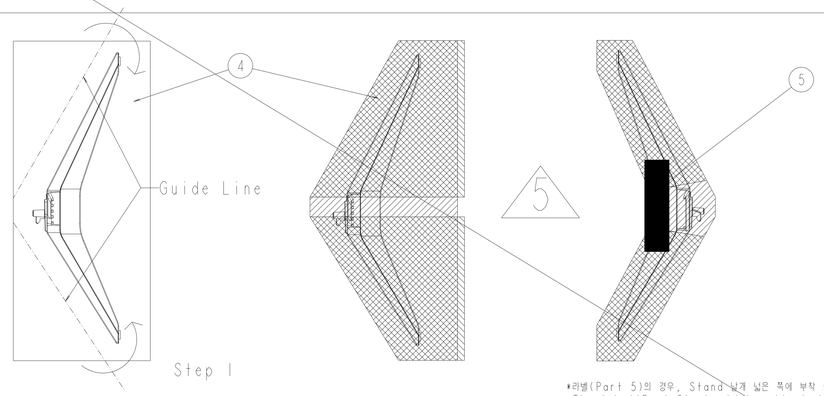

*라벨(Part 5)의 경우, Stand 넓게 넓은 쪽에 부착 할 것.
*The label(Part 5) should be attached to the wide side of the stand wing.

1. Insert stand into the Bag
2. folding the bag following as guide line(Step 1)
3. Attach the Label
4. fold the bag to cover the stand totally and check it.

⚠2 Label(MEZ690717**) attach guide

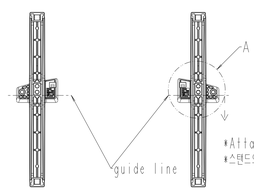

⚠2 [Label 부착 작업 순서]
1. Label에 있는 Screw Hole 개수와 Stand Screw Hole 개수가 일치하는지 확인 할 것.
2. Guide Line 기준으로 부착 할 것.
3. Label에 있는 ⚠2이미지가 아래쪽으로 위치하게 부착 할 것.
* Label 미세들뜸 허용.

[Label Attachment WORKING SEQUENCE]
1. Check the screw Hole quantity on the label with stand.
2. Attached to guide line.
3. The image of ⚠2 on the label will be placed to the bottom.
* Partially adhered label is acceptable.

*Attach label on longer side of the stand leg.
*스탠드의 긴 다리 쪽으로 라벨 부착할 것.

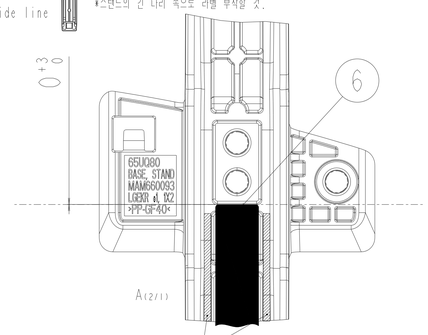

*Do not get on the specified surface while attaching.
*부착 시 해당 부착 면에 올려타지 말 것.

*Attach label(Part 6) on the other side of stand as reference.
*참고 참고하여 반대 편 스탠드에도 동일하게 라벨(Part 6) 부착할 것.

SYM.	DATE	REVD.	ECNO	REVISIONS
⚠	APR.08.2024	KIM DOWAN	EKLO4001146	Replace packing/labeling method on laminate bag to other sheet
⚠	NOV.24.2023	NWAK SANGWOON	DKLNA00619	Add information in barcode label (for Canada regulation) & Label attachment guide
⚠	MAY.30.2023	KIM DONGHYUN	EKLN500820	Update 2 Pole bar code label table
⚠	DEC.09.2022	KIM DOWAN	EKLM800798	Add label attaching guide for customer assemble
⚠	JUN.02.2022	CHO KYUNG SIK	DKLM500825	Add the wobble spec.

This drawing belongs to LG Electronics Inc. The people handling it secretly will be punished according to the relevant rules and the company's standards.

CONFIRM

SCALE	UNIT	TITLE	
N/S	MM		BASE ASSEMBLY, STAND 65U79
DESIGNED: CHO KYUNG SIK APR.18.2022	CHECKED: KIM DONG HYUN APR.21.2022	APPROVED: SONG DONG SEOK APR.26.2022	

LG Electronics Inc.

REF.DWG NO.

APPD.TEST NO.

DWG.NO. AAN300784 (2/10)

AAN300784 (3/10)

Internal Use Only

LG Electronics

Dimension Type	Mark
General Dim.	None
Part Approval	#
MP Check	*
CTQ	<CTQ>
Consumer Assembly	@

Auto Part List

NO.	DESCRIPTION	PART NO.	MATERIAL		

Consumer Assembly Point

LEFT(A) Assy, View

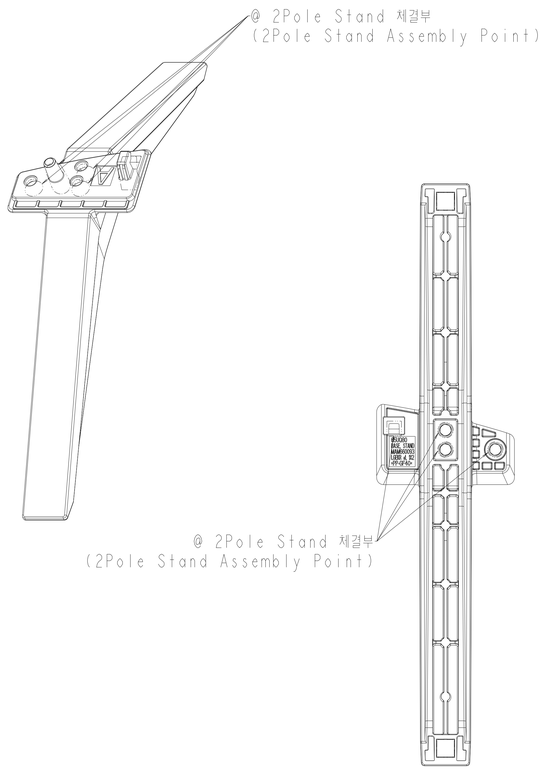

RIGHT(B) Assy, View

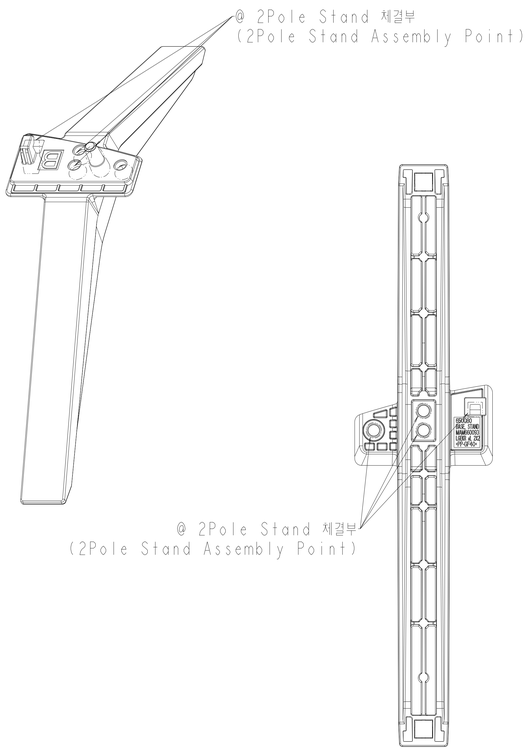

SYM.	DATE	REVD.	ECNO	REVISIONS

This drawing belongs to LGE. The data handling it securely will be punished according to the rules regard Patent Patent and the company standards.

CONFIRM

SCALE	UNIT	
N/S	MM	
DESIGNED	CHECKED	APPROVED
CHO KYONG SIK	KIM DONG HYUN	SONG DONG SEOK
APR.18.2022	APR.21.2022	APR.26.2022

TITLE: BASE ASSEMBLY, STAND

65UQ79

LG Electronics Inc.

REF.DWG.NO.

APPR.TEST NO.

DWG. NO. AAN300784 (3/10)

AAN300784 (4/10)

Internal Use Only

LG Electronics

Packing Method

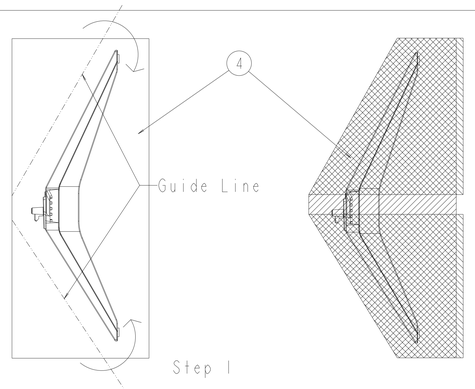

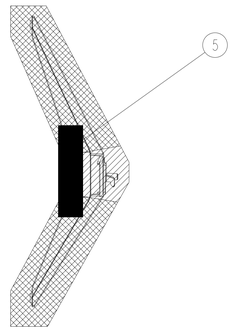

*라벨(Part 5)의 경우, Stand 날개 넓은 쪽에 부착 할 것.
*The label(Part 5) should be attached to the wide side of the stand wing.

1. Insert stand into the Bag
2. folding the bag following as guide line(Step 1)
3. Attach the Label
4. fold the bag to cover the stand totally and check it.

2 Pole barcode Label

No	(d)	(e)	Remark
1-1	60/65	LI/BL	Light Black
1-2	60/65	AS/BR	Ashed Brown
1-3	60/65	TI/GR	Titan Gray
1-4	60/65	RO/BL	Rocky Black
1-5	60/65	ES/GR	Essence Graphite
1-6	60/65	CH/BL	Charcoal Black

*Color of Label
MEZ64114729 : White
MEZ64114730 : Yellow

Packing Method (for PE bag MAF664340"[03]/[08]/[15]")

This packaging has been improved by following the TV reliability test standard.
Therefore, if the packing method differs, it needs to be proven by the test. (C/SKD, Set.)

1.bag(PART[4])에 스탠드 장입 후 가이드라인에 맞춰 실링할 것.
-열 실링 중 입구부분 구겨지거나 찢어짐 허용함.
(단, 열 융착 중 찢어짐 등에 의한 미 실링구간은 10mm 이하일 것.)

1.Insert the stand to the bag(Part[4])
and seal the entrance by following the guide line.
-Allow tear/wrinkle on the area while heat sealing.
(Non-sealing area due to tearing or similar issues should be less than 10mm during heat seal.)

*업체 재작업 및 수입검사 확인 등을 위한 컷팅 라인
(실링위치가 라인보다 위에 있다면 라인 윗쪽 컷팅 무방)

*Cutting line for rework and inspection verification.
(It's fine to cut above the line when the sealed area is higher.)

*1차 실링 구간 (실링 시 컷팅 라인 침범 허용)
*Primary sealing area.
(Allow till cutting line.)

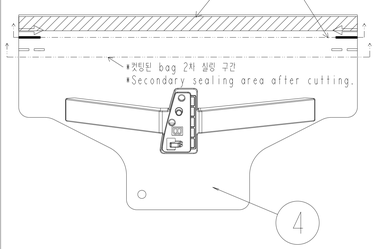

Re-packing after inspection

1.봉합에 맞춰 bag에 스탠드 장입한다.
제품이 드러나지 않도록 bag을 접어 OPP tape(A) 등으로 장착
혹은 열 융착(B) 후 다음 가이드 진행.

1.Insert the stand as below to the bag.
Manage the bag to keep the stand shielded from exposure using tape etc(A) or heat seal(B) and then proceed next step.

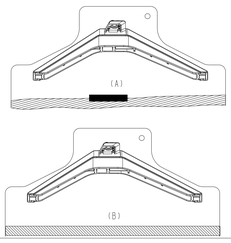

2.하기와 같이 접어서 bag 끝단이 삐져나오지 않도록 감싼다.
3.그리고 *바코드라벨([5]번부)를 부착한다.

2.Fold as shown below to wrap the bag, ensuring that both ends do not protrude.
3.And then attach *bar-code label(Part[5]).

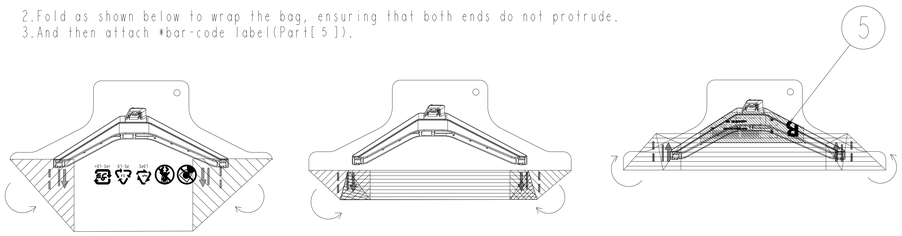

*Label 부착 시 Barcode 인쇄부는 반드시 Stand 하단쪽으로 향하게 부착할 것.(바코드 반대 면은 접혀도 무방함.)
*Bar-code should be placed on bottom side of the stand.(Other side can be folded without any issues.)

2 *이미지 상의 stand 방향과 상관없이 트레이 장입방향으로 stand를 포장할 것.
*Regardless of the stand image,
package the stand in the direction which it loads into the tray.

MAF664340"[03]"_GRS

MAF664340"[08]"_ECAS

MAF664340"[15]"_No print

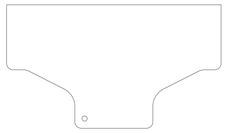

SYM.	DATE	REVD.	ECNO	REVISIONS
3	NOV.20.2024	KIM DOWAN	EKLOA01021	Replace ECAS mark
2	JUL.22.2024	SYAFIQ NAZRIM	DKLOT00509	Add remark for charcoal black in barcode label
1	JUN.27.2024	KIM DOWAN	EKLO60071G	Add comment on packing guide for PE bag to avoid confusion. Add 2nd packing method
0	APR.08.2024	KIM DOWAN	EKLO40014G	Separate packing method in cohesive bag from tape. sheet Add packing method for deplicate PE

This Drawing belongs to LG Electronics and the design hoarding is secretly will be punished according to the relevant rules and the company's standards. CONFIRM

SCALE	UNIT	TITLE
1/1	MM	BASE ASSEMBLY, STAND

DESIGNED	CHECKED	APPROVED
CHO KYUNG SIK	KIM DONG HYUN	SONG DONG SEOK
APR.18.2022	APR.21.2022	APR.26.2022

65UQ79

LG Electronics Inc.

REF.DWG NO.

APPD.TEST NO.

DWG.NO. AAN300784 (4/10)

AAN300784 (5/10)

Internal Use Only

LG Electronics

65UQ79

C/SKD PACKING SPECIFICATION

DQMS APPROVAL No.HERDL-1910-00266(불요)
RDL-2312-0000484(GRS,불요)
RDL-2312-0000485(ECAS,불요)

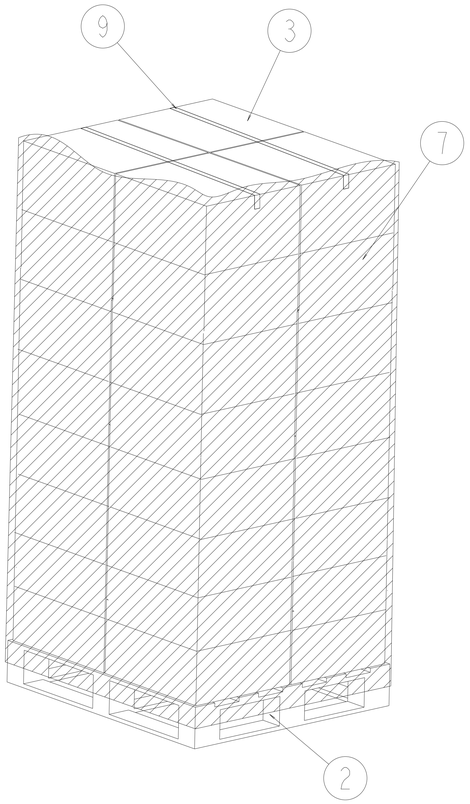

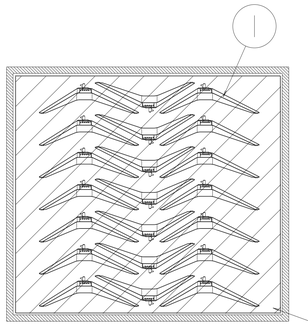

Top View

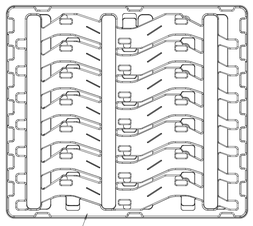

TRAY 형상

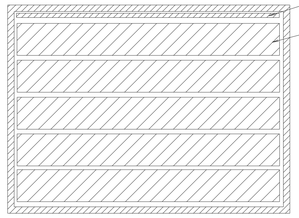

Side View

BOX PRINT CONTENTS	Maximum stackable box step RoHS 글꼴 : 굴림체 크기 : (FONT 48) 문자/이미지 : 흑색 배합 : Box 색상 DO NOT DROP FRAGILE HANDLE WITH CARE
CONTAINER 적재 방법 (40FT H/C)	1. BOX 당 장입수량 : 105EA 2. PALLET 당 BOX 적재수량 : 32BOX 3. CONTAINER에 PALLET 적재수량 길이 방향 : 9 PALLET 폭 방향 : 2 PALLET 높이 방향 : 1 PALLET 4. CONTAINER 당 장입수량 PALLET 수량 : 18 PALLET BOX 수량 : 576 BOX 제품 수량 : 60,480 EA
CONTAINER SIZE	40Ft(H/C):12,000(L) * 2,330(W) * 2,690(H)
주의사항	Palletzing 총 높이는 2,500mm 이하가 되도록 설계할것.

CONTAINER에 PALLET 장입 방법

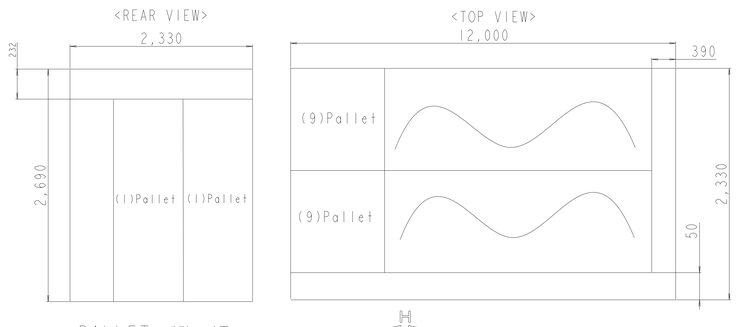

PALLET 제작 기준

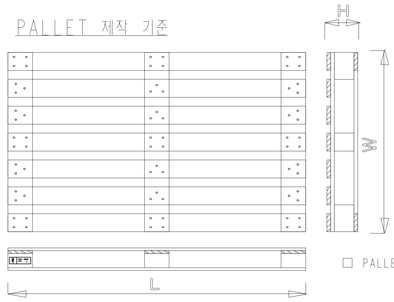

	LVL 합판	Pallet "W"	상판 개수
INJECTION /STAND	11.5 t 폭 70mm	1300 이상	9 EA
		1100 이상	7 EA
		1100 미만	5 EA
PRESS B/C	14.5 t 폭 80mm	800 이상	5 EA
		800 미만	4 EA

☐ PALLET "W" 치수가 박스 장변과 Align 되도록 제작 할 것.

PART	1	2	3	4	5	6	7	8	9	10	11	12	13	14	15	16
DESCRIPTION	Base Assembly, STAND	Pallet	Box	Tray	Top PAD	Label	WRAP	Month Label	OPP-TAPE	"Safety Mark"						
Q'TY	3,360EA	1EA	32EA/Pallet	5EA/BOX	1EA/BOX	1EA/BOX	35MZ/Pallet	1EA/BOX	1.5MZ/BOX	2EA/BOX						
MATERIAL or P/N	AAN300784	MGA63859212 (표준 Pallet)	DW(MAY68948502) (KL(B)175*S120*S120*A180 *KL(B)175)		PE	411-A22A	882-052B	MEZ64920601	961-0111							
SPECIFICATION		1290*1140*119.5	633*558*275 (Inner Size)	630*555*68	630*555*3t	Label위치는 특정위치로 지정하지 않으며, Box 적재시,보이는 방향에 부착 할 것.	Minimum "7Turn"	Label위치는 특정위치로 지정하지 않으며, Box 적재시,보이는 방향에 부착 할 것.	"-" Type	전/후 2EA						
잔량(소량) SPEC					Box내 최상단에 적용 할 것.											

NOTE
1. 소량 포장 안에 별도 명기되지 않은 항목은 기본 포장 안과 동일하게 적용함
2. 소량 포장 방법은 별도 배포 및 유첨된 소량 포장 Guide를 따를 것

NOTE
1. Apply default C/SKD packing method when no comments are written on small packing table.
2. Follow small packing guide refer to attachment or deployed separately for packing method.

#INFORMATION FOR WOODEN PALLET

*Detail of IPPC complianted markings

XX 000
HT

XX : ISO 3166 2자리 국가코드
000 : 해당 국가 산림청 등록 업체 번호 3자리
HT : 열처리 (HEAT TREATMENT)

DD : The 2 dimension of DD country code
000 : The 3 digit facility code assigned to that manufacturer by the NPPO
HT : IPPC abbreviation for the heat treatment

※ 훈증목 겸용 표 (MB/HT) * The standard of wood packaging material heat treatment(HT).
-목재 훈증기준 최소온도가 56°C로 30분이상 유지되어야 함 (최소 처리한 목재중심부의 온도기준임).
* It should be treated in accordance with a specific time-temperature schedule that achieves a minimum core temperature of 56°C for a minimum of 30 minutes.
*훈증(MB), 열처리 (HT)를 적용한 모든 가공된 원목은 IPC 가이드라인 준수를 준수해야 하며 표시 (IPPC)를 표기해야 함.
*Kiln-dried(KD), chemical pressure impregnated(CP), or other treatment may be considered HT treatments to the extent that these meet the HT specifications.

SYM	DATE	REVD.	ECNO	REVISIONS
△	APR. 05. 2024	KIM DOWAN	EKL0400146	Add approval no for GRS, ECAS PE

This drawing belongs to LGE. The design boarding is strictly will be punished according to the Patent Law and the Company standard.

CONFIRM

SCALE	UNIT	TITLE
N/S	MM	BASE ASSEMBLY, STAND

DESIGNED	CHECKED	APPROVED
CAD KIONG GIA APR.18.2022	KIM DONG WON APR.21.2022	JONG DONG GEON APR.26.2022

65U079

LG Electronics Inc.

EST.DWG.NO.

APPD.TEST NO.

DWG.NO. AAN300784 (5/10)

AAN300784 (6/10)

Internal Use Only

LG Electronics

Auto Part List

NO.	DESCRIPTION	PART NO.	MATERIAL		

NO	PART 2		PART 3		PART 4		PART 5		△1 PART 6		PART 7		PART 8		FINISH1		FINISH2		TYPE	CHANGE CORE					C/SKD PACKING	MATERIAL MARK	REMARK	MODEL	NO
	PART NAME		PART NAME		PART NAME		PART NAME		PART NAME		PART NAME		PART NAME		DESCRIPTION		DESCRIPTION			AA	BB	CC	DD	EE					
	P/No.	Q'ty	P/No.	Q'ty	P/No.	Q'ty	P/No.	Q'ty	P/No.	Q'ty	P/No.	Q'ty	P/No.	Q'ty	P/No.	Q'ty	P/No.	Q'ty											
01	Base		Bag		Damper		Label		Label																No	>PP-GF40<	Label Printing (I-1) Light Black	60/65UQ79 Global (Left)	01
	MAM66009301	1 EA	MAF64729467	1 EA	MCQ68894002	2 EA	MEZ64114729	1 EA	MEZ69071719	1 EA																			
02	Base		Damper		Bag		Label		Label																No	>PP-GF40<	Label Printing (I-1) Light Black	60/65UQ79 Global (Right)	02
	MAM66009302	1 EA	MCQ68894002	2 EA	MAF64729467	1 EA	MEZ64114730	1 EA	MEZ69071719	1 EA																			
03	Base		Damper		Bag		Label		Label																Yes	>PP-GF40<	Label Printing (I-1) Light Black	60/65UQ79 Global (Left)	03
	MAM66009301	1 EA	MCQ68894002	2 EA	MAF64729467	1 EA	MEZ64114729	1 EA	MEZ69071719	1 EA																			
04	Base		Damper		Bag		Label		Label																Yes	>PP-GF40<	Label Printing (I-1) Light Black	60/65UQ79 Global (Right)	04
	MAM66009302	1 EA	MCQ68894002	2 EA	MAF64729467	1 EA	MEZ64114730	1 EA	MEZ69071719	1 EA																			
05	Base		Damper		Bag		Label		Label																No	>PP-GF40<	Label Printing (I-3) Titan Gray	60/65UQ79 Global (Left)	05
	MAM66009303	1 EA	MCQ68894002	2 EA	MAF64729467	1 EA	MEZ64114729	1 EA	MEZ69071719	1 EA																			
06	Base		Damper		Bag		Label		Label																No	>PP-GF40<	Label Printing (I-3) Titan Gray	60/65UQ79 Global (Right)	06
	MAM66009304	1 EA	MCQ68894002	2 EA	MAF64729467	1 EA	MEZ64114730	1 EA	MEZ69071719	1 EA																			
07	Base		Damper		Bag		Label		Label																Yes	>PP-GF40<	Label Printing (I-3) Titan Gray	60/65UQ79 Global (Left)	07
	MAM66009303	1 EA	MCQ68894002	2 EA	MAF64729467	1 EA	MEZ64114729	1 EA	MEZ69071719	1 EA																			
08	Base		Damper		Bag		Label		Label																Yes	>PP-GF40<	Label Printing (I-3) Titan Gray	60/65UQ79 Global (Right)	08
	MAM66009304	1 EA	MCQ68894002	2 EA	MAF64729467	1 EA	MEZ64114730	1 EA	MEZ69071719	1 EA																			
09	Base		Damper		Bag		Label																		Brazil Phantom	>PP-GF40<	Label Printing (I-1) Light Black	60/65UQ79 Brazil Phantom (Left)	09
	MAM66009305	1 EA	MCQ68894002	2 EA	MAF64729467	1 EA	MEZ64114729	1 EA																					
10	Base		Damper		Bag		Label																		Brazil Phantom	>PP-GF40<	Label Printing (I-1) Light Black	60/65UQ79 Brazil Phantom (Right) _From KR	10
	MAM66009306	1 EA	MCQ68894002	2 EA	MAF64729467	1 EA	MEZ64114730	1 EA																					
11	Base		Damper		Bag		Label		Label																Phantom	>PP-GF40<	Label Printing (I-1) Light Black	60/65UQ79 LGEMA Local (Left) _From KR	11
	MAM66009301	1 EA	MCQ68894002	2 EA	MAF64729467	1 EA	MEZ64114729	1 EA	MEZ69071719	1 EA																			
12	Base		Damper		Bag		Label		Label																Phantom	>PP-GF40<	Label Printing (I-1) Light Black	60/65UQ79 LGEMA Local (Right)	12
	MAM66009302	1 EA	MCQ68894002	2 EA	MAF64729467	1 EA	MEZ64114730	1 EA	MEZ69071719	1 EA																			
13	Base		Damper		Bag		Label		Label																Phantom	>PP-GF40<	Label Printing (I-1) Light Black	60/65UQ79 LGESP Local (Left)	13
	MAM66009301	1 EA	MCQ68894002	2 EA	MAF64729467	1 EA	MEZ64114729	1 EA	MEZ69071719	1 EA																			
14	Base		Damper		Bag		Label		Label																Phantom	>PP-GF40<	Label Printing (I-1) Light Black	60/65UQ79 LGESP Local (Right)	14
	MAM66009302	1 EA	MCQ68894002	2 EA	MAF64729467	1 EA	MEZ64114730	1 EA	MEZ69071719	1 EA																			
15	Base		Damper		Bag		Label		Label																Phantom	>PP-GF40<	Label Printing (I-1) Light Black	60/65UQ79 LGERS Local (Left)	15
	MAM66009301	1 EA	MCQ68894002	2 EA	MAF64729467	1 EA	MEZ64114729	1 EA	MEZ69071719	1 EA																			
16	Base		Damper		Bag		Label		Label																Phantom	>PP-GF40<	Label Printing (I-1) Light Black	60/65UQ79 LGERS Local (Right)	16
	MAM66009302	1 EA	MCQ68894002	2 EA	MAF64729467	1 EA	MEZ64114730	1 EA	MEZ69071719	1 EA																			
17	Base		Damper		Bag		Label		Label																△1 Yes	>PP-GF40<	Label Printing (I-1) Light Black	△1 60/65UQ79 LGEAIN (Left)	17
	MAM66009301	1 EA	MCQ68894002	2 EA	MAF64729467	1 EA	MEZ64114729	1 EA	MEZ69071719	1 EA																			
18	Base		Damper		Bag		Label		Label																△1 Yes	>PP-GF40<	Label Printing (I-1) Light Black	△1 60/65UQ79 LGEAIN (Right)	18
	MAM66009302	1 EA	MCQ68894002	2 EA	MAF64729467	1 EA	MEZ64114730	1 EA	MEZ69071719	1 EA																			
19	Base		Damper		Bag		Label		Label																△1 Yes	>PP-GF40<	Label Printing (I-3) Titan Gray	△1 60/65UQ79 LGEAIN (Left)	19
	MAM66009303	1 EA	MCQ68894002	2 EA	MAF64729467	1 EA	MEZ64114729	1 EA	MEZ69071719	1 EA																			
20	Base		Damper		Bag		Label		Label																△1 Yes	>PP-GF40<	Label Printing (I-3) Titan Gray	△1 60/65UQ79 LGEAIN (Right)	20
	MAM66009304	1 EA	MCQ68894002	2 EA	MAF64729467	1 EA	MEZ64114730	1 EA	MEZ69071719	1 EA																			

SYM.	DATE	REVD.	ECNO	REVISIONS	CONFIRM
△1	OCT.06.2022	KIM DOWAN	DKLMA00050	Correct C/SKD type and model on P/N "17~20" (was)Phantom, IN local -> (is)Yes, LGEAIIN)	
	AUG.30.2022	CHO KYONG SIK	DKLMB00033T	Add series P/N "17"~"20"	
	JUL.18.2022	CHO KYONG SIK	DKLM700423	Add series P/N "15"~"16"	
△2	JUL.06.2022	CHO KYONG SIK	DKLM600619	Add series P/N "11"~"14"	
△3	JUN.02.2022	CHO KYONG SIK	DKLM500825	Add series P/N "05"~"10"	

This drawing belongs to LGE. The person hoarding it secretly will be punished according to the relevant rules and the company standard.

SCALE	UNIT	TITLE
N/S	MM	BASE ASSEMBLY, STAND 65UQ79
DESIGNED: CHO KYONG SIK, APR.18.2022	CHECKED: KIM DONG HYUN, APR.21.2022	APPROVED: SONG DONG SEOK, APR.26.2022

LG Electronics Inc.

REF.DWG.NO.

APPD.TEST NO.

DWG.NO. AAN300784 (6/10)

SYM.	DATE	REVD.	ECNO	REVISIONS	CONFIRM
△1	DEC.09.2022	KIM DOWAN	EKLMB00798	Add PART 6	

This drawing belongs to LGE. The person hoarding it secretly will be punished according to the relevant rules and the company standard.

AAN300784 (7/10)

Internal Use Only

LG Electronics

Auto Part List

NO.	DESCRIPTION	PART NO.	MATERIAL		

NO	PART 2		PART 3		PART 4		PART 5		△1 PART 6		PART 7		PART 8		FINISH1		FINISH2		TYPE	CHANGE CORE					C/SKD PACKING	MATERIAL MARK	REMARK	MODEL	NO
	PART NAME		PART NAME		PART NAME		PART NAME		PART NAME		PART NAME		PART NAME		DESCRIPTION		DESCRIPTION												
	P/No.	Q'ty	P/No.	Q'ty	P/No.	Q'ty	P/No.	Q'ty	P/No.	Q'ty	P/No.	Q'ty	P/No.	Q'ty	P/No.	Q'ty	P/No.	Q'ty		AA	BB	CC	DD	EE					
21	Base		Damper		Bag		Label		Label																Brazil Phantom	>PP-GF40<	Label Printing (1-1) Light Black	60/65UQ79 Brazil Phantom (Left),From IN	21
	MAM66009307	1 EA	MCQ68894002	2 EA	MAF64729467	1 EA	MEZ64114729	1 EA	MEZ69071719	1 EA																			
22	Base		Damper		Bag		Label		Label																Brazil Phantom	>PP-GF40<	Label Printing (1-1) Light Black	60/65UQ79 Brazil Phantom (Right),From IN	22
	MAM66009308	1 EA	MCQ68894002	2 EA	MAF64729467	1 EA	MEZ64114730	1 EA	MEZ69071719	1 EA																			
23	Base		Damper		Bag		Label		Label																No	>PP-GF40<	Label Printing (1-2) Ashed Brown	60/65UR75 Global (Left)	23
	MAM66009309	1 EA	MCQ68894002	2 EA	MAF64729467	1 EA	MEZ64114729	1 EA	MEZ69071719	1 EA																			
24	Base		Damper		Bag		Label		Label																No	>PP-GF40<	Label Printing (1-2) Ashed Brown	60/65UR75 Global (Right)	24
	MAM66009310	1 EA	MCQ68894002	2 EA	MAF64729467	1 EA	MEZ64114730	1 EA	MEZ69071719	1 EA																			
25	Base		Damper		Bag		Label		Label																Yes	>PP-GF40<	Label Printing (1-2) Ashed Brown	60/65UR75 LGEA(KR) (Left)	25
	MAM66009309	1 EA	MCQ68894002	2 EA	MAF64729467	1 EA	MEZ64114729	1 EA	MEZ69071719	1 EA																			
26	Base		Damper		Bag		Label		Label																Yes	>PP-GF40<	Label Printing (1-2) Ashed Brown	60/65UR75 LGEA(KR) (Right)	26
	MAM66009310	1 EA	MCQ68894002	2 EA	MAF64729467	1 EA	MEZ64114730	1 EA	MEZ69071719	1 EA																			
27	Base		Damper		Bag		Label		Label																Yes	>PP-GF40<	Label Printing (1-2) Ashed Brown	60/65UR75 LGEA(IN) (Left)	27
	MAM66009309	1 EA	MCQ68894002	2 EA	MAF64729467	1 EA	MEZ64114729	1 EA	MEZ69071719	1 EA																			
28	Base		Damper		Bag		Label		Label																Yes	>PP-GF40<	Label Printing (1-2) Ashed Brown	60/65UR75 LGEA(IN) (Right)	28
	MAM66009310	1 EA	MCQ68894002	2 EA	MAF64729467	1 EA	MEZ64114730	1 EA	MEZ69071719	1 EA																			
29	Base		Damper		Bag		Label		Label																Phantom	>PP-GF40<	Label Printing (1-2) Ashed Brown	60/65UR75 LGEMA Local (Left)	29
	MAM66009309	1 EA	MCQ68894002	2 EA	MAF64729467	1 EA	MEZ64114729	1 EA	MEZ69071719	1 EA																			
30	Base		Damper		Bag		Label		Label																Phantom	>PP-GF40<	Label Printing (1-2) Ashed Brown	60/65UR75 LGEMA Local (Right)	30
	MAM66009310	1 EA	MCQ68894002	2 EA	MAF64729467	1 EA	MEZ64114730	1 EA	MEZ69071719	1 EA																			
31	Base		Damper		Bag		Label		Label																Phantom	>PP-GF40<	Label Printing (1-2) Ashed Brown	60/65UR75 LGERS Local (Left)	31
	MAM66009309	1 EA	MCQ68894002	2 EA	MAF64729467	1 EA	MEZ64114729	1 EA	MEZ69071719	1 EA																			
32	Base		Damper		Bag		Label		Label																Phantom	>PP-GF40<	Label Printing (1-2) Ashed Brown	60/65UR75 LGERS Local (Right)	32
	MAM66009310	1 EA	MCQ68894002	2 EA	MAF64729467	1 EA	MEZ64114730	1 EA	MEZ69071719	1 EA																			
33	Base		Damper		Bag		Label		Label																Phantom	>PP-GF40<	Label Printing (1-2) Ashed Brown	60/65UR75 LGESP Local (Left)	33
	MAM66009309	1 EA	MCQ68894002	2 EA	MAF64729467	1 EA	MEZ64114729	1 EA	MEZ69071719	1 EA																			
34	Base		Damper		Bag		Label		Label																Phantom	>PP-GF40<	Label Printing (1-2) Ashed Brown	60/65UR75 LGERS Local (Right)	34
	MAM66009310	1 EA	MCQ68894002	2 EA	MAF64729467	1 EA	MEZ64114730	1 EA	MEZ69071719	1 EA																			
35	Base		Damper		Bag		Label		Label																Phantom	>PP-GF40<	Label Printing (1-1) Light Black	65UR75 LGEMX Local (Left)	35
	MAM66009301	1 EA	MCQ68894002	2 EA	MAF64729467	1 EA	MEZ64114729	1 EA	MEZ69071719	1 EA																			
36	Base		Damper		Bag		Label		Label																Phantom	>PP-GF40<	Label Printing (1-1) Light Black	65UR75 LGEMX Local (Right)	36
	MAM66009302	1 EA	MCQ68894002	2 EA	MAF64729467	1 EA	MEZ64114730	1 EA	MEZ69071719	1 EA																			
37	Base		Damper		Bag		Label		Label																Argentina Phantom	>PP-GF40<	Label Printing (1-1) Light Black	60/65UR75 Argentina Phantom (Left),From IN	37
	MAM66009307	1 EA	MCQ68894002	2 EA	MAF64729472	1 EA	MEZ64114729	1 EA	MEZ69071719	1 EA																			
38	Base		Damper		Bag		Label		Label																Argentina Phantom	>PP-GF40<	Label Printing (1-1) Light Black	60/65UR75 Argentina Phantom (Right),From IN	38
	MAM66009308	1 EA	MCQ68894002	2 EA	MAF64729472	1 EA	MEZ64114730	1 EA	MEZ69071719	1 EA																			
39	Base		Damper		Bag		Label		Label																NO	>PP-GF40<	Label Printing (1-4) Rocky Black	60/65UR75 Global (Left)	39
	MAM66009315	1 EA	MCQ68894002	2 EA	MAF64729467	1 EA	MEZ64114729	1 EA	MEZ69071719	1 EA																			
40	Base		Damper		Bag		Label		Label																NO	>PP-GF40<	Label Printing (1-4) Rocky Black	60/65UR75 Global (Right)	40
	MAM66009316	1 EA	MCQ68894002	2 EA	MAF64729467	1 EA	MEZ64114730	1 EA	MEZ69071719	1 EA																			

SYM.	DATE	REVD.	ECNO	REVISIONS
	MAY.16.2023	KIM DONGHYUN	DKLN500329	Add series P/N "39,40"
	JAN.27.2023	CHO KYUNG SIK	DKLN100149	Add series P/N "37,38"
	JAN.03.2023	KIM DOWAN	DKLMC00561	Add series P/N "35,36"
△1	DEC.09.2022	KIM DOWAN	EKLM800798	Add PART 6
△2	SEP.23.2022	KIM DOWAN	DKLM900719	Add series P/N "23"~"34"
△3	AUG.30.2022	CHO KYUNG SIK	DKLM800337	Add series P/N "21"~"22"

This drawing belongs to LG Electronics Inc. Any design boarding it secretly will be punished according to the relevant laws and the company's standard.

CONFIRM

SCALE	UNIT		TITLE
1/1	MM		BASE ASSEMBLY, STAND 65UQ79
DESIGNED	CHECKED	APPROVED	
CHO KYUNG SIK APR.18.2022	KIM DONG HYUN APR.21.2022	SONG DONG SEOK APR.26.2022	

LG Electronics Inc.

REF.DWG NO.

APPD.TEST NO.

DWG.NO. AAN300784 (7/10)

AAN300784 (8/10)

Internal Use Only

LG Electronics

Auto Part List

NO.	DESCRIPTION	PART NO.	MATERIAL		

NO	PART 2		PART 3		PART 4		PART 5		PART 6		PART 7		PART 8		FINISH1		FINISH2		TYPE	CHANGE CORE					C/SKD PACKING	MATERIAL MARK	REMARK	MODEL	NO
	PART NAME		PART NAME		PART NAME		PART NAME		PART NAME		PART NAME		PART NAME		DESCRIPTION		DESCRIPTION			AA	BB	CC	DD	EE					
	P/No.	Q'ty	P/No.	Q'ty	P/No.	Q'ty	P/No.	Q'ty	P/No.	Q'ty	P/No.	Q'ty	P/No.	Q'ty	P/No.	Q'ty	P/No.	Q'ty											
41																													41
42																													42
43																													43
44																													44
45	Base		Bag		Damper		Label		Label																△2 Phantom	>PP-GF40<	Label Printing (1-4) Rocky Black	60/65UR75 LGEMA Local (Left)	45
	MAM66009315	1 EA	MAF64729467	1 EA	MCQ68894002	2 EA	MEZ64114729	1 EA	MEZ69071719	1 EA																			
46	Base		Bag		Damper		Label		Label																△2 Phantom	>PP-GF40<	Label Printing (1-4) Rocky Black	60/65UR75 LGEMA Local (Right)	46
	MAM66009316	1 EA	MAF64729467	1 EA	MCQ68894002	2 EA	MEZ64114730	1 EA	MEZ69071719	1 EA																			
47	Base		Bag		Damper		Label		Label																△2 Phantom	>PP-GF40<	Label Printing (1-4) Rocky Black	60/65UR75 LGESP Local (Left)	47
	MAM66009315	1 EA	MAF64729467	1 EA	MCQ68894002	2 EA	MEZ64114729	1 EA	MEZ69071719	1 EA																			
48	Base		Bag		Damper		Label		Label																△2 Phantom	>PP-GF40<	Label Printing (1-4) Rocky Black	60/65UR75 LGESP Local (Right)	48
	MAM66009316	1 EA	MAF64729467	1 EA	MCQ68894002	2 EA	MEZ64114730	1 EA	MEZ69071719	1 EA																			
49	Base		Bag		Damper		Label		Label																△2 Phantom	>PP-GF40<	Label Printing (1-4) Rocky Black	60/65UR75 LGERS Local (Left)	49
	MAM66009315	1 EA	MAF64729467	1 EA	MCQ68894002	2 EA	MEZ64114729	1 EA	MEZ69071719	1 EA																			
50	Base		Bag		Damper		Label		Label																△2 Phantom	>PP-GF40<	Label Printing (1-4) Rocky Black	60/65UR75 LGERS Local (Right)	50
	MAM66009316	1 EA	MAF64729467	1 EA	MCQ68894002	2 EA	MEZ64114730	1 EA	MEZ69071719	1 EA																			
51	Base		Damper		Bag		Label		Label																△1 ~~NO~~ YES	>PP-GF40<	Label Printing (1-4) Rocky Black	60/65UR75 LGEAI(IN) (Left)	51
	MAM66009315	1 EA	MCQ68894002	2 EA	MAF64729467	1 EA	MEZ64114729	1 EA	MEZ69071719	1 EA																			
52	Base		Damper		Bag		Label		Label																△1 ~~NO~~ YES	>PP-GF40<	Label Printing (1-4) Rocky Black	60/65UR75 LGEAI(IN) (Right)	52
	MAM66009316	1 EA	MCQ68894002	2 EA	MAF64729467	1 EA	MEZ64114730	1 EA	MEZ69071719	1 EA																			
53	Base		Bag		Damper		Label		Label																△2 Phantom	>PP-GF40<	Label Printing (1-4) Rocky Black	60/65UR75 LGEMX Local (Left)	53
	MAM66009315	1 EA	MAF64729467	1 EA	MCQ68894002	2 EA	MEZ64114729	1 EA	MEZ69071719	1 EA																			
54	Base		Bag		Damper		Label		Label																△2 Phantom	>PP-GF40<	Label Printing (1-4) Rocky Black	60/65UR75 LGEMX Local (Right)	54
	MAM66009316	1 EA	MAF64729467	1 EA	MCQ68894002	2 EA	MEZ64114730	1 EA	MEZ69071719	1 EA																			
55	Base				Bag		Label		Label		Damper														△2 Phantom	>PP-GF40<	Label Printing (1-4) Rocky Black	60/65UR75 Argentina Phantom (Left)_From IN	55
	MAM66009317	1 EA			MAF64729472	1 EA	MEZ64114729	1 EA	MEZ69071719	1 EA	MCQ68894002	2 EA																	
56	Base				Bag		Label		Label		Damper														△2 Phantom	>PP-GF40<	Label Printing (1-4) Rocky Black	60/65UR75 Argentina Phantom (Right)_From IN	56
	MAM66009318	1 EA			MAF64729472	1 EA	MEZ64114730	1 EA	MEZ69071719	1 EA	MCQ68894002	2 EA																	
57	Base		Damper		Bag		Label		Label																NO	>PP-GF40<	Label Printing (1-5) Essence Graphite	60/65UR75 Global (Left)	57
	MAM66009319	1 EA	MCQ68894002	2 EA	MAF64729467	1 EA	MEZ64114729	1 EA	MEZ69071719	1 EA																			
58	Base		Damper		Bag		Label		Label																NO	>PP-GF40<	Label Printing (1-5) Essence Graphite	60/65UR75 Global (Right)	58
	MAM66009320	1 EA	MCQ68894002	2 EA	MAF64729467	1 EA	MEZ64114730	1 EA	MEZ69071719	1 EA																			
59	Base		Bag		Damper		Label		Label																△2 YES	>PP-GF40<	Label Printing (1-5) Essence Graphite	60/65UR75 LGEAI(IN) (Left)	59
	MAM66009319	1 EA	MAF64729467	1 EA	MCQ68894002	2 EA	MEZ64114729	1 EA	MEZ69071719	1 EA																			
60	Base		Bag		Damper		Label		Label																△2 YES	>PP-GF40<	Label Printing (1-5) Essence Graphite	60/65UR75 LGEAI(IN) (Right)	60
	MAM66009320	1 EA	MAF64729467	1 EA	MCQ68894002	2 EA	MEZ64114730	1 EA	MEZ69071719	1 EA																			

SYM.	DATE	REVD.	ECNO	REVISIONS
△1	JUL.05.2024	PARK SOONWK	EKL0600429	Drawing realization for C/SKD
△2	JUNE.28.2023	KIM DONGHYUN	EKLN600407	CSKD Option change NO to YES for "51"/"52"
△3	MAY.16.2023	KIM DONGHYUN	OKLN500329	Add series P/N "45-60"

This drawing belongs to LG. The person hoarding it secretly will be punished according to the relevant rules and the company's standard.

CONFIRM

SCALE	UNIT		TITLE
1/1	MM		BASE ASSEMBLY, STAND 65UQ79

DESIGNED	CHECKED	APPROVED
CHO KYONG SIK	KIM DONG HYUN	SONG DONG SEOK
APR.8.2022	APR.21.2022	APR.26.2022

LG Electronics Inc.

REF.DWG NO.

APPD.TEST NO.

DWG.NO. AAN300784 (8/10)

AAN300784 (9/10)

Internal Use Only

LG Electronics

Auto Part List

NO.	DESCRIPTION	PART NO.	MATERIAL		

NO	PART 2		PART 3		PART 4		PART 5		PART 6		PART 7		PART 8		FINISH1		FINISH2		TYPE	CHANGE CORE					C/SKD PACKING	MATERIAL MARK	REMARK	MODEL	NO
	PART NAME		PART NAME		PART NAME		PART NAME		PART NAME		PART NAME		PART NAME		DESCRIPTION		DESCRIPTION												
	P/No.	Q'ty	P/No.	Q'ty	P/No.	Q'ty	P/No.	Q'ty	P/No.	Q'ty	P/No.	Q'ty	P/No.	Q'ty	P/No.	Q'ty	P/No.	Q'ty		AA	BB	CC	DD	EE					
61	Base		Damper		Bag,Vinyl		Label		Label																NO	>PP-GF40<	Label Printing (1-4) Rocky Black	24Y 65NANO80 Global(GRS) (Left)	61
	MAM66009315	1 EA	MCQ68894002	2 EA	MAF66434003	1 EA	MEZ64114729	1 EA	MEZ69071719	1 EA																			
62	Base		Damper		Bag,Vinyl		Label		Label																NO	>PP-GF40<	Label Printing (1-4) Rocky Black	24Y 65NANO80 Global(GRS) (Right)	62
	MAM66009316	1 EA	MCQ68894002	2 EA	MAF66434003	1 EA	MEZ64114730	1 EA	MEZ69071719	1 EA																			
63	Base		Damper		Bag,Vinyl		Label		Label																NO	>PP-GF40<	Label Printing (1-4) Rocky Black	24Y 65NANO80 SASO(ECAS) (Left)	63
	MAM66009315	1 EA	MCQ68894002	2 EA	MAF66434008	1 EA	MEZ64114729	1 EA	MEZ69071719	1 EA																			
64	Base		Damper		Bag,Vinyl		Label		Label																NO	>PP-GF40<	Label Printing (1-4) Rocky Black	24Y 65NANO80 SASO(ECAS) (Right)	64
	MAM66009316	1 EA	MCQ68894002	2 EA	MAF66434008	1 EA	MEZ64114730	1 EA	MEZ69071719	1 EA																			
65	Base		Damper		Bag,Vinyl		Label		Label																YES	>PP-GF40<	Label Printing (1-4) Rocky Black	24Y 65NANO80 Global(GRS)_LGEA(IN) (Left)	65
	MAM66009315	1 EA	MCQ68894002	2 EA	MAF66434003	1 EA	MEZ64114729	1 EA	MEZ69071719	1 EA																			
66	Base		Damper		Bag,Vinyl		Label		Label																YES	>PP-GF40<	Label Printing (1-4) Rocky Black	24Y 65NANO80 Global(GRS)_LGEA(IN) (Right)	66
	MAM66009316	1 EA	MCQ68894002	2 EA	MAF66434003	1 EA	MEZ64114730	1 EA	MEZ69071719	1 EA																			
67	Base		Damper		Bag,Vinyl		Label		Label																YES	>PP-GF40<	Label Printing (1-4) Rocky Black	24Y 65NANO80 SASO(ECAS)_LGEA(IN) (Left)	67
	MAM66009315	1 EA	MCQ68894002	2 EA	MAF66434008	1 EA	MEZ64114729	1 EA	MEZ69071719	1 EA																			
68	Base		Damper		Bag,Vinyl		Label		Label																YES	>PP-GF40<	Label Printing (1-4) Rocky Black	24Y 65NANO80 SASO(ECAS)_LGEA(IN) (Right)	68
	MAM66009316	1 EA	MCQ68894002	2 EA	MAF66434008	1 EA	MEZ64114730	1 EA	MEZ69071719	1 EA																			
69	Base		Damper		Bag,Vinyl		Label		Label																Phantom	>PP-GF40<	Label Printing (1-4) Rocky Black	24Y 65NANO80 Global(GRS)_MA local (Left)	69
	MAM66009315	1 EA	MCQ68894002	2 EA	MAF66434003	1 EA	MEZ64114729	1 EA	MEZ69071719	1 EA																			
70	Base		Damper		Bag,Vinyl		Label		Label																Phantom	>PP-GF40<	Label Printing (1-4) Rocky Black	24Y 65NANO80 Global(GRS)_MA local (Right)	70
	MAM66009316	1 EA	MCQ68894002	2 EA	MAF66434003	1 EA	MEZ64114730	1 EA	MEZ69071719	1 EA																			
71	Base		Damper		Bag,Vinyl		Label		Label																Phantom	>PP-GF40<	Label Printing (1-4) Rocky Black	24Y 65NANO80 Global(GRS)_SP local (Left)	71
	MAM66009315	1 EA	MCQ68894002	2 EA	MAF66434003	1 EA	MEZ64114729	1 EA	MEZ69071719	1 EA																			
72	Base		Damper		Bag,Vinyl		Label		Label																Phantom	>PP-GF40<	Label Printing (1-4) Rocky Black	24Y 65NANO80 Global(GRS)_SP local (Right)	72
	MAM66009316	1 EA	MCQ68894002	2 EA	MAF66434003	1 EA	MEZ64114730	1 EA	MEZ69071719	1 EA																			
73	Base		Damper		Bag,Vinyl		Label		Label																Phantom	>PP-GF40<	Label Printing (1-4) Rocky Black	24Y 65NANO80 Global(GRS)_RS local (Left)	73
	MAM66009315	1 EA	MCQ68894002	2 EA	MAF66434003	1 EA	MEZ64114729	1 EA	MEZ69071719	1 EA																			
74	Base		Damper		Bag,Vinyl		Label		Label																Phantom	>PP-GF40<	Label Printing (1-4) Rocky Black	24Y 65NANO80 Global(GRS)_RS local (Right)	74
	MAM66009316	1 EA	MCQ68894002	2 EA	MAF66434003	1 EA	MEZ64114730	1 EA	MEZ69071719	1 EA																			
75	Base		Damper		Bag,Vinyl		Label		Label																Phantom	>PP-GF40<	Label Printing (1-4) Rocky Black	24Y 65NANO80 Global(GRS)_MX local (Left)	75
	MAM66009315	1 EA	MCQ68894002	2 EA	MAF66434003	1 EA	MEZ64114729	1 EA	MEZ69071719	1 EA																			
76	Base		Damper		Bag,Vinyl		Label		Label																Phantom	>PP-GF40<	Label Printing (1-4) Rocky Black	24Y 65NANO80 Global(GRS)_MX local (Right)	76
	MAM66009316	1 EA	MCQ68894002	2 EA	MAF66434003	1 EA	MEZ64114730	1 EA	MEZ69071719	1 EA																			
77	Base		Damper		Bag,Vinyl		Label		Label																Phantom	>PP-GF40<	Label Printing (1-4) Rocky Black	24Y 65NANO80 Global(GRS) Argentina Pantom (Left)_From IN	77
	MAM66009317	1 EA	MCQ68894002	2 EA	MAF66434015	1 EA	MEZ64114729	1 EA	MEZ69071719	1 EA																			
78	Base		Damper		Bag,Vinyl		Label		Label																Phantom	>PP-GF40<	Label Printing (1-4) Rocky Black	24Y 65NANO80 Global(GRS) Argentina Pantom (Right)_From IN	78
	MAM66009318	1 EA	MCQ68894002	2 EA	MAF66434015	1 EA	MEZ64114730	1 EA	MEZ69071719	1 EA																			
79	Base		Damper		Bag,Vinyl		Label		Label																NO	>PP-GF40<	Label Printing (1-6) Charcoal Black	25Y 65NANO80 Global(GRS) (Left)	79
	MAM66009321	1 EA	MCQ68894002	2 EA	MAF66434003	1 EA	MEZ64114729	1 EA	MEZ69071719	1 EA																			
80	Base		Damper		Bag,Vinyl		Label		Label																NO	>PP-GF40<	Label Printing (1-6) Charcoal Black	25Y 65NANO80 Global(GRS) (Right)	80
	MAM66009322	1 EA	MCQ68894002	2 EA	MAF66434003	1 EA	MEZ64114730	1 EA	MEZ69071719	1 EA																			

SYM.	DATE	REVD.	ECNO	REVISIONS	CONFIRM
△	JUL.22.2024	SFAFIQ NAZRIM	DKL0700509	Add series P/N "79~80"	
△	APR.08.2024	KIM DOMAN	EKL0400146	Add series P/N "61~78"	

This drawing belongs to LG Electronics. The design hoarding it secretly will be punished according to relevant laws and the company's standard.

SCALE	UNIT	TITLE
1/1	MM	BASE ASSEMBLY, STAND 65UQ79

DESIGNED	CHECKED	APPROVED
CHO KYONG SIK	KIM DONG HYUN	SONG DONG SEOK
APR.18.2022	APR.21.2022	APR.26.2022

LG Electronics Inc.

REF.DWG NO.

APPD.TEST NO.

DWG.NO. AAN300784 (9/10)

AAN300784 (10/10)

Internal Use Only

LG Electronics

Auto Part List

NO.	DESCRIPTION	PART NO.	MATERIAL		

NO	PART 2		PART 3		PART 4		PART 5		PART 6		PART 7		PART 8		FINISH1		FINISH2		TYPE	CHANGE CORE					C/SKD PACKING	MATERIAL MARK	REMARK	MODEL	NO
	PART NAME		PART NAME		PART NAME		PART NAME		PART NAME		PART NAME		PART NAME		DESCRIPTION		DESCRIPTION			AA	BB	CC	DD	EE					
	P/No.	Q'ty	P/No.	Q'ty	P/No.	Q'ty	P/No.	Q'ty	P/No.	Q'ty	P/No.	Q'ty	P/No.	Q'ty	P/No.	Q'ty	P/No.	Q'ty											
81	Base		Damper		Bag,Vinyl		Label		Label																YES	>PP-GF40<	Label Printing (1-6) Charcool Black	25Y 65NANO80 Global(GRS),LGEA(IN) (Left)	81
	MAM66009321	1 EA	MCQ68894002	2 EA	MAF66434003	1 EA	MEZ64114729	1 EA	MEZ69071719	1 EA																			
82	Base		Damper		Bag,Vinyl		Label		Label																YES	>PP-GF40<	Label Printing (1-6) Charcool Black	25Y 65NANO80 Global(GRS),LGEA(IN) (Right)	82
	MAM66009322	1 EA	MCQ68894002	2 EA	MAF66434003	1 EA	MEZ64114730	1 EA	MEZ69071719	1 EA																			
83	Base		Damper		Bag,Vinyl		Label		Label																Phantom	>PP-GF40<	Label Printing (1-6) Charcool Black	25Y 65NANO80 Global(GRS),RS local (Left)	83
	MAM66009321	1 EA	MCQ68894002	2 EA	MAF66434003	1 EA	MEZ64114729	1 EA	MEZ69071719	1 EA																			
84	Base		Damper		Bag,Vinyl		Label		Label																Phantom	>PP-GF40<	Label Printing (1-6) Charcool Black	25Y 65NANO80 Global(GRS),RS local (Right)	84
	MAM66009322	1 EA	MCQ68894002	2 EA	MAF66434003	1 EA	MEZ64114730	1 EA	MEZ69071719	1 EA																			
85	Base		Damper		Bag,Vinyl		Label		Label																YES	>PP-GF40<	Label Printing (1-5) Essence Graphite	60/65UR75 LGEA(IN) (Left)	85
	MAM66009319	1 EA	MCQ68894002	2 EA	MAF66434008	1 EA	MEZ64114729	1 EA	MEZ69071719	1 EA																			
86	Base		Damper		Bag,Vinyl		Label		Label																YES	>PP-GF40<	Label Printing (1-5) Essence Graphite	60/65UR75 LGEA(IN) (Right)	86
	MAM66009320	1 EA	MCQ68894002	2 EA	MAF66434008	1 EA	MEZ64114730	1 EA	MEZ69071719	1 EA																			
87	Base		Damper		Bag,Vinyl		Label		Label																Phantom	>PP-GF40<	Label Printing (1-6) Charcool Black	25Y 65NANO80 Global(GRS),SP local (Left)	87
	MAM66009321	1 EA	MCQ68894002	2 EA	MAF66434003	1 EA	MEZ64114729	1 EA	MEZ69071719	1 EA																			
88	Base		Damper		Bag,Vinyl		Label		Label																Phantom	>PP-GF40<	Label Printing (1-6) Charcool Black	25Y 65NANO80 Global(GRS),SP local (Right)	88
	MAM66009322	1 EA	MCQ68894002	2 EA	MAF66434003	1 EA	MEZ64114730	1 EA	MEZ69071719	1 EA																			
89	Base		Damper		Bag,Vinyl		Label		Label																Phantom	>PP-GF40<	Label Printing (1-6) Charcool Black	25Y 65NANO80 Global(GRS),MX local (Left)	89
	MAM66009321	1 EA	MCQ68894002	2 EA	MAF66434003	1 EA	MEZ64114729	1 EA	MEZ69071719	1 EA																			
90	Base		Damper		Bag,Vinyl		Label		Label																Phantom	>PP-GF40<	Label Printing (1-6) Charcool Black	25Y 65NANO80 Global(GRS),MX local (Right)	90
	MAM66009322	1 EA	MCQ68894002	2 EA	MAF66434003	1 EA	MEZ64114730	1 EA	MEZ69071719	1 EA																			
91	Base		Damper		Bag,Vinyl		Label		Label																Phantom	>PP-GF40<	Label Printing (1-6) Charcool Black	25Y 65NANO80 Global(GRS),MA local (Left)	91
	MAM66009321	1 EA	MCQ68894002	2 EA	MAF66434003	1 EA	MEZ64114729	1 EA	MEZ69071719	1 EA																			
92	Base		Damper		Bag,Vinyl		Label		Label																Phantom	>PP-GF40<	Label Printing (1-6) Charcool Black	25Y 65NANO80 Global(GRS),MA local (Right)	92
	MAM66009322	1 EA	MCQ68894002	2 EA	MAF66434003	1 EA	MEZ64114730	1 EA	MEZ69071719	1 EA																			
93	Base		Damper		Bag,Vinyl		Label		Label																NO	>PP-GF40<	Label Printing (1-6) Charcool Black	25Y 65NANO80 SASO(ECAS) (Left)	93
	MAM66009321	1 EA	MCQ68894002	2 EA	MAF66434008	1 EA	MEZ64114729	1 EA	MEZ69071719	1 EA																			
94	Base		Damper		Bag,Vinyl		Label		Label																NO	>PP-GF40<	Label Printing (1-6) Charcool Black	25Y 65NANO80 SASO(ECAS) (Right)	94
	MAM66009322	1 EA	MCQ68894002	2 EA	MAF66434008	1 EA	MEZ64114730	1 EA	MEZ69071719	1 EA																			
95	Base		Damper		Bag,Vinyl		Label		Label																YES	>PP-GF40<	Label Printing (1-6) Charcool Black	25Y 65NANO80 SASO(ECAS),LGEA(IN) (Left)	95
	MAM66009321	1 EA	MCQ68894002	2 EA	MAF66434008	1 EA	MEZ64114729	1 EA	MEZ69071719	1 EA																			
96	Base		Damper		Bag,Vinyl		Label		Label																YES	>PP-GF40<	Label Printing (1-6) Charcool Black	25Y 65NANO80 SASO(ECAS),LGEA(IN) (Right)	96
	MAM66009322	1 EA	MCQ68894002	2 EA	MAF66434008	1 EA	MEZ64114730	1 EA	MEZ69071719	1 EA																			
97	Base		Damper		Bag,Vinyl		Label		Label																Phantom	>PP-GF40<	Label Printing (1-6) Charcool Black	25Y 65NANO80 Global(GRS) Argentina Pantom (Left),From IN	97
	MAM66009323	1 EA	MCQ68894002	2 EA	MAF66434015	1 EA	MEZ64114729	1 EA	MEZ69071719	1 EA																			
98	Base		Damper		Bag,Vinyl		Label		Label																Phantom	>PP-GF40<	Label Printing (1-6) Charcool Black	25Y 65NANO80 Global(GRS) Argentina Pantom (Right),From IN	98
	MAM66009324	1 EA	MCQ68894002	2 EA	MAF66434015	1 EA	MEZ64114730	1 EA	MEZ69071719	1 EA																			

SYM.	DATE	REVD.	ECNO	REVISIONS	CONFIRM
	MAR.20.2025	SYAFIQ NAZRIM	DKLP300805	Add series P/N "97-98"	
△	OCT.15.2024	FAIZ R. H.	DKLO400157	Add series P/N "83-84" and "87-96"	
△	SEP.25.2024	GOO HOON CHOI	DKLO900689	Add series P/N "85-86"	
△	JUL.22.2024	SYAFIQ NAZRIM	DKLO700509	Add series P/N "81-82"	

This drawing belongs to LG Electronics Inc. The design hoarding it secretly will be punished according to relevant laws and the company's standard.

SCALE	UNIT		TITLE
1/1	MM		BASE ASSEMBLY, STAND
DESIGNED	CHECKED	APPROVED	65UQ79
CHO KYONG SIK	KIM DONG HYUN	SONG DONG SEOK	
APR.8.2022	APR.21.2022	APR.26.2022	

LG Electronics Inc.

REF.DWG NO.

APPD.TEST NO.

DWG.NO. AAN300784 (10/10)