RAPHAEL COTTIER

Portfolio

Year 2022
Product Design

+41 77 492 73 08
raphael.cottier@cottier.ch

Contents

1 Sitting with Gravity
Foldable Chair
Domus Academy | June/July 2020

2 Memory of Touch
Glass Carafe, Vase and Glasses
Domus Academy | May/June 2020

3 Translucent
Glass Carafes
Domus Academy | April 2020

4 Hat-Trick
Portable Lamp
Domus Academy | March/April 2020

+41 77 492 73 08 | raphael.cottier@cottier.ch

1 Sitting with Gravity

Typology Foldable Chair
Where Domus Academy
When June/July 2020

Solo Project

Context

The association **MuseoCity** asked design school students to design a **seat** that would make **long museums** visits for people with **slight motor impairments** more **comfortable** by enabling them to take **short breaks**. A few chairs would be placed in each exhibition room and visitors could **take one** and **move it** to where they please and **rest**. Of the competition's winning chair, ~50 pieces would be produced and placed inside the **Gallerie d'Italia, Piazza Scala** in Milan.

Brief

The **brief** dictated that the seats had to be **easily movable**, **ergonomic** (e.g. backrest or at least lumbar support), **simple to produce**, consider the aspect of **environmental sustainability**, as well as **safety**, **stability** and **resistance** of the finished product (compliance with UNI regulations).

+41 77 492 73 08 | raphael.cottier@cottier.ch

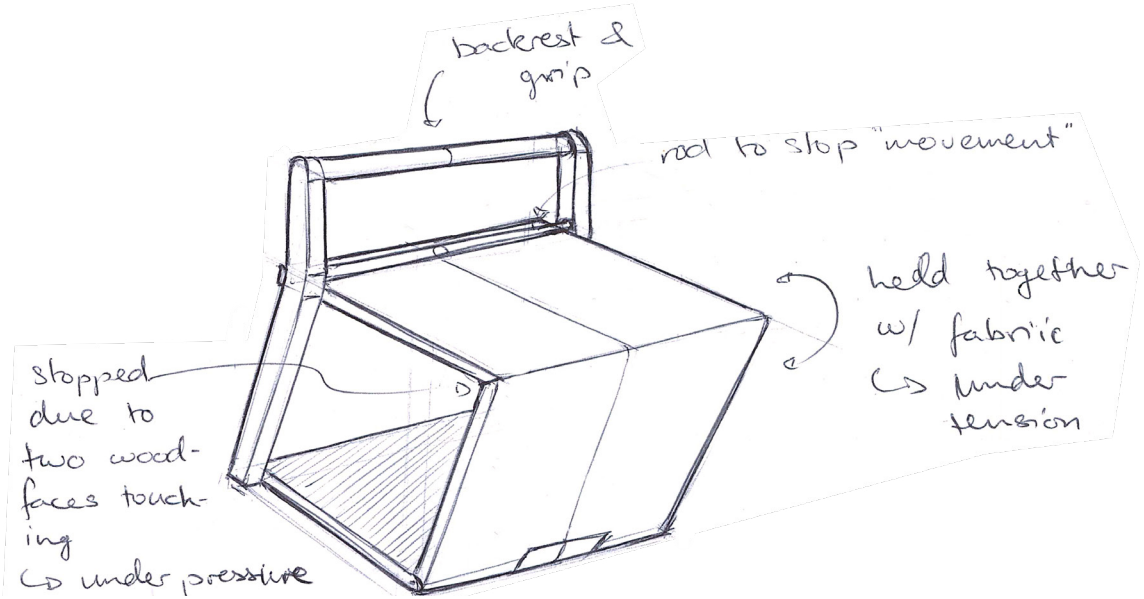

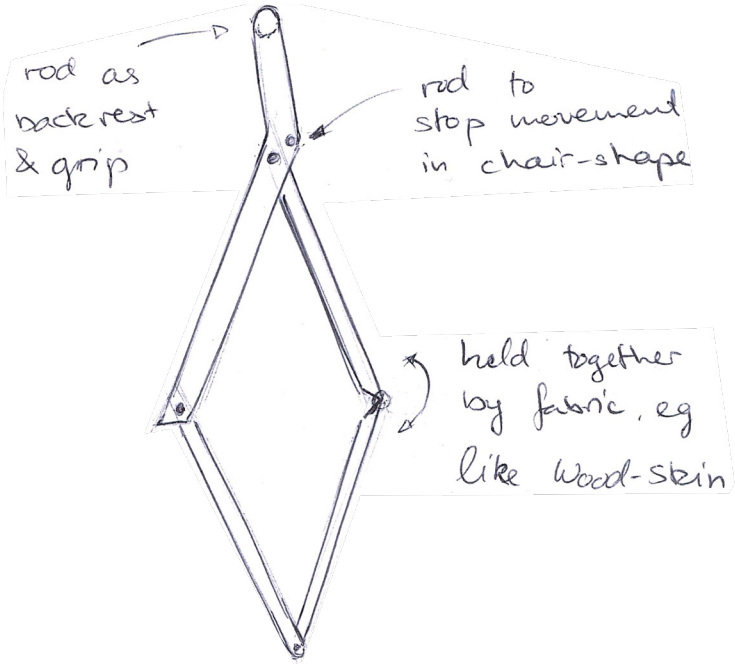

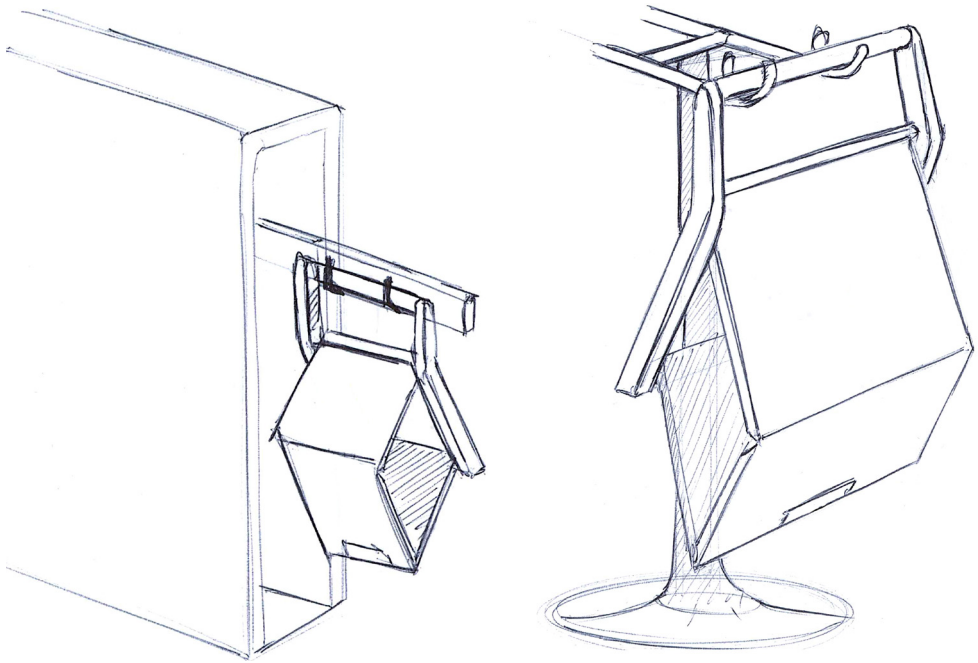

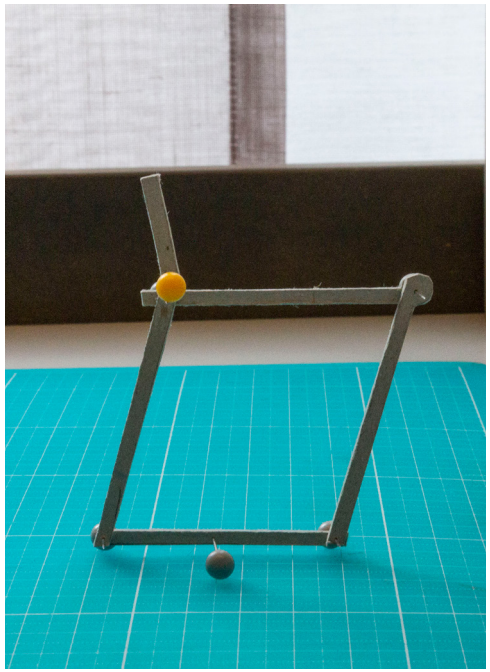

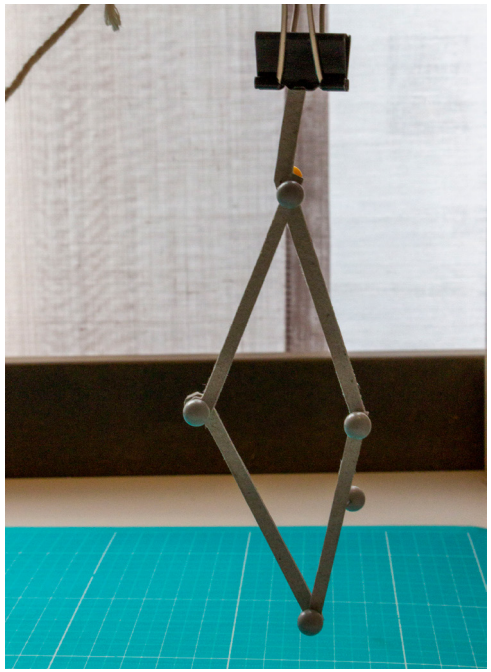

Initial sketch & **cardboard mockup** to test the mechanism

+41 77 492 73 08 | raphael.cottier@cottier.ch

Explanation of the one-handed **unfolding mechanism**

+41 77 492 73 08 | raphael.cottier@cottier.ch

Polycarbonate version with possible customizations

+41 77 492 73 08 | raphael.cottier@cottier.ch

3-chair **storage option** with customization of front

+41 77 492 73 08 | raphael.cottier@cottier.ch

+41 77 492 73 08 | raphael.cottier@cottier.ch

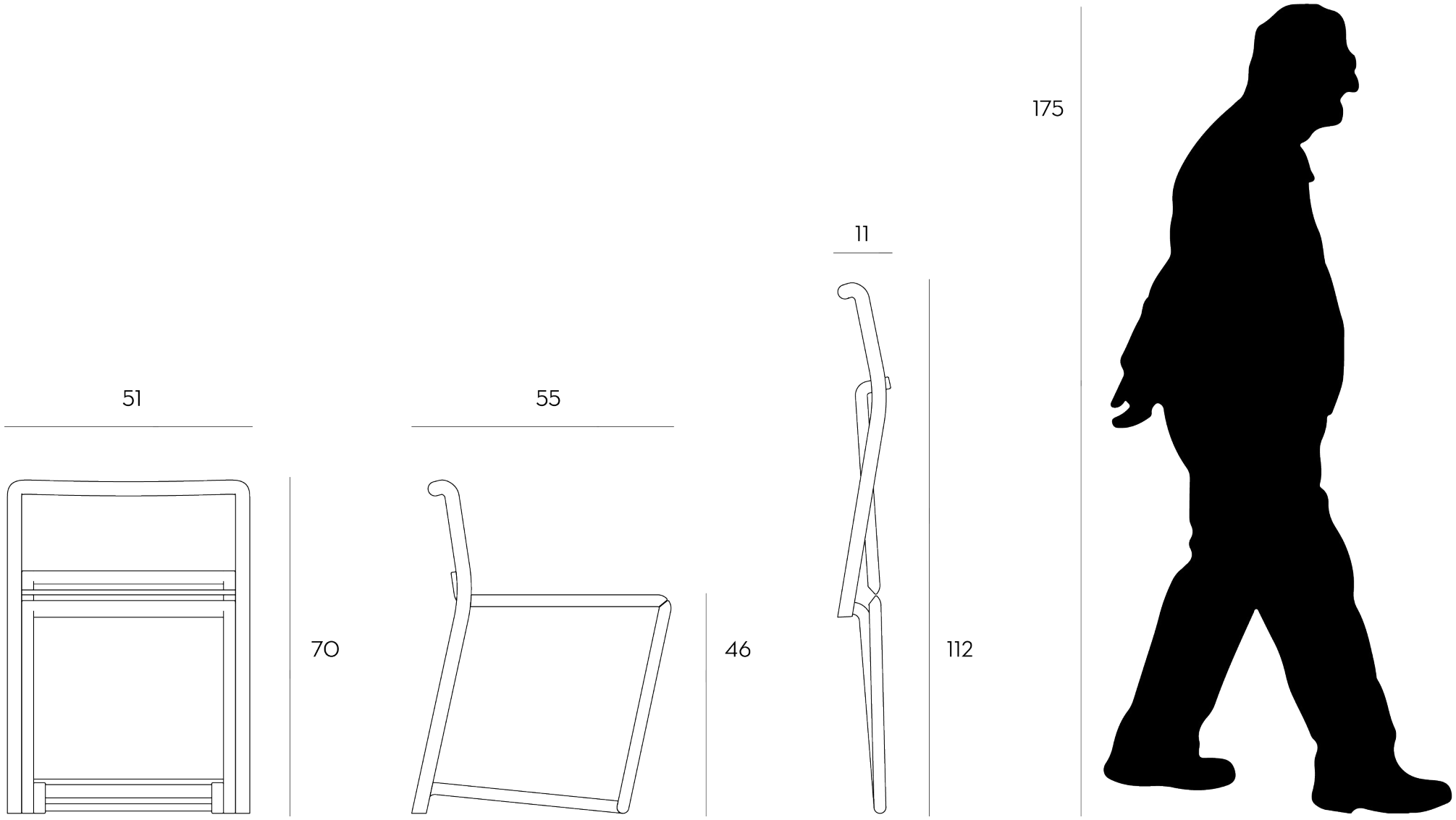

Basic dimensions with reference in (*cm*)

+41 77 492 73 08 | raphael.cottier@cottier.ch

2 Memory of Touch

Typology Glass Carafe, Vase and Glasses
Where Domus Academy
When May/June 2020

Team Members Daniele Ficarra, Raphael Cottier
My Roles Two individual projects with shared research and concept

Context

During this current **pandemic**, **Memory of Touch** tries to show that even simple **daily objects such as carafes** are objects that could **spread the infection** because we risk **touching the same surface** or region on a surface as someone else. Avt the same time it **helps people avoiding it** by giving multiple ways, clearly labeled ways to handle the object.

Brief

The **brief** asked to imagine an object, or a set of objects, for a **new and daily life for COVID-19**. It should **reflect the thoughts of the user** and **represent the situation** of the pandemic, but at the same time give a **positive inspiration**, while also making our **lives better** during and after the pandemic.

+41 77 492 73 08 | raphael.cottier@cottier.ch

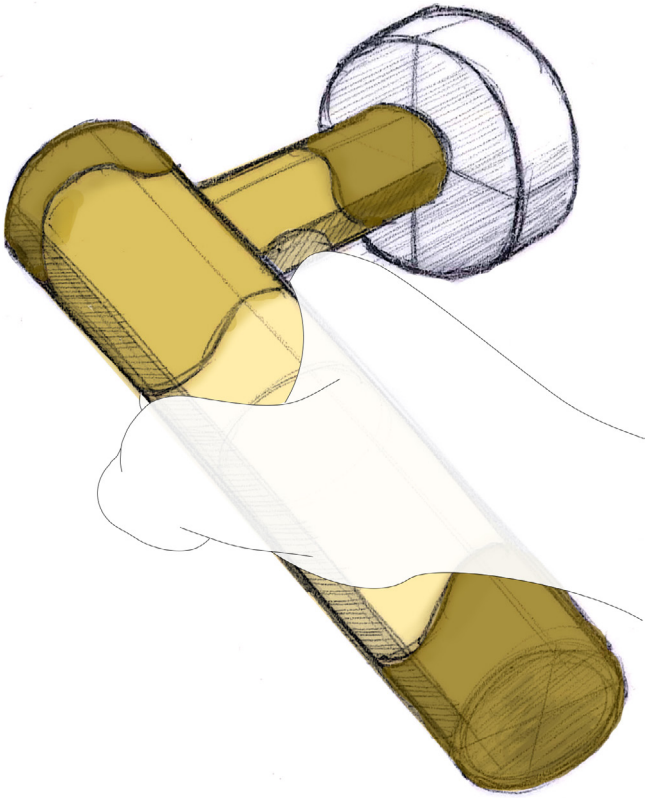

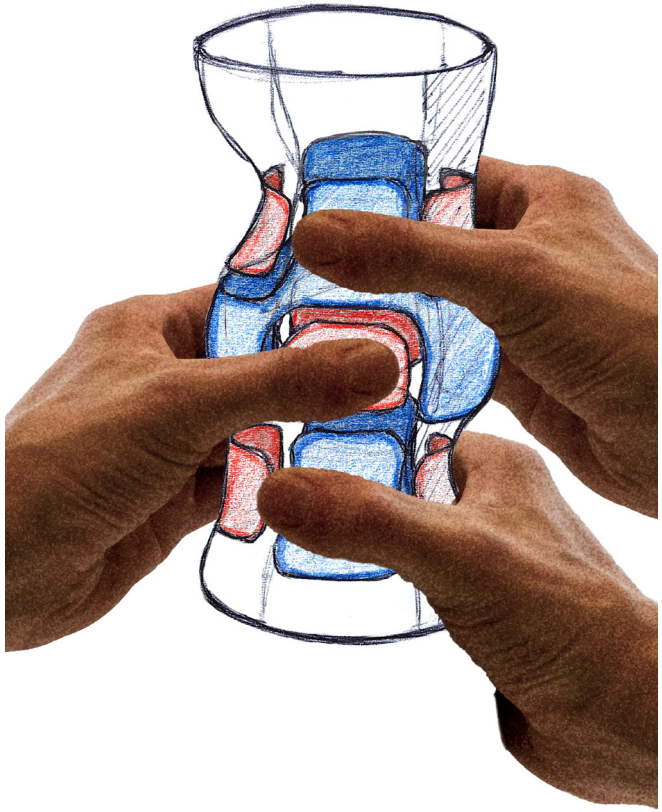

Initial insight based on brass doorhandle and **base shape**

+41 77 492 73 08 | raphael.cottier@cottier.ch

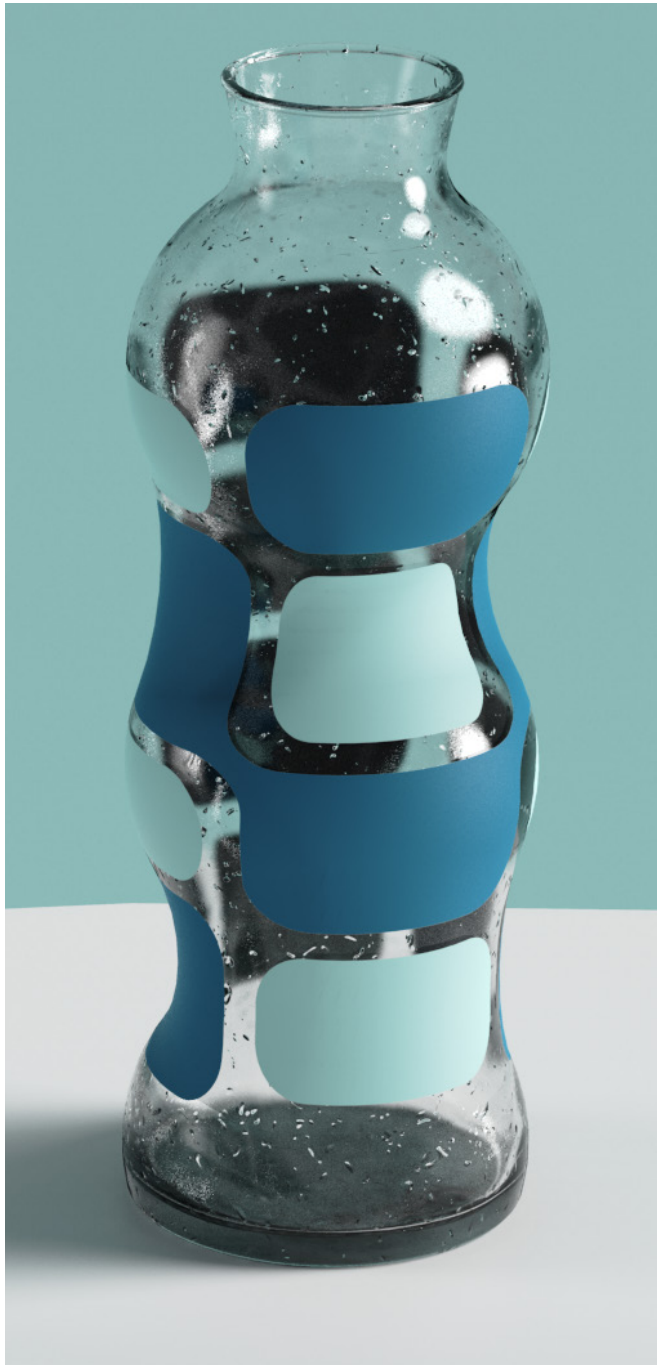

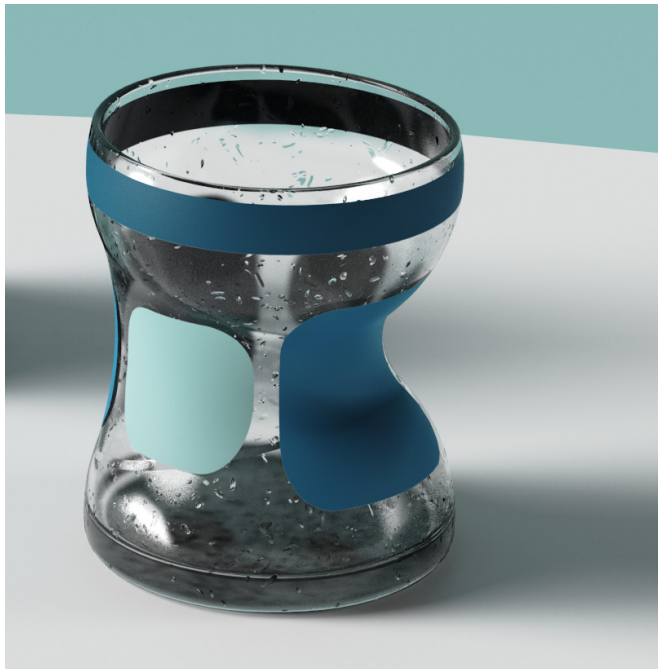

+41 77 492 73 08 | raphael.cottier@cottier.ch

+41 79 842 27 78 | raphael.cottier@cottier.ch

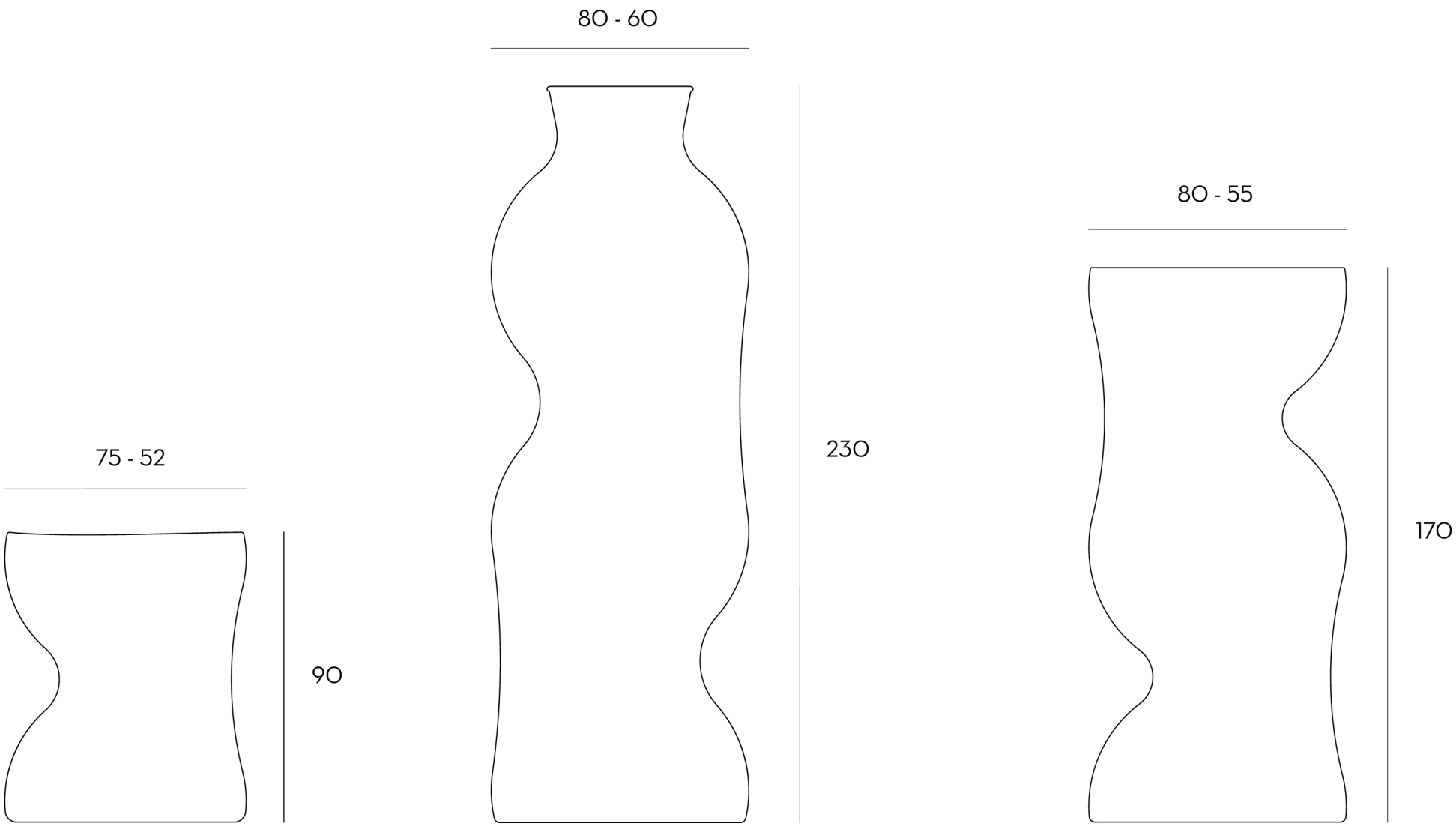

Basic dimensions (*mm*)

+41 77 492 73 08 | raphael.cottier@cottier.ch

3 Translucent

Typology Glass Carafes
Where Domus Academy
When April 2020

Solo Project

Brief

The **brief** asked to design an object or a set of objects for a hypothetical client. The object must be a **container for liquids** that is **used anytime during the day**, inside a **domestic environment** and that **acts primarily on the table**. No plastic allowed, but instead glass, ceramic, marble, wood and metal should be used.

+41 77 492 73 08 | raphael.cottier@cottier.ch

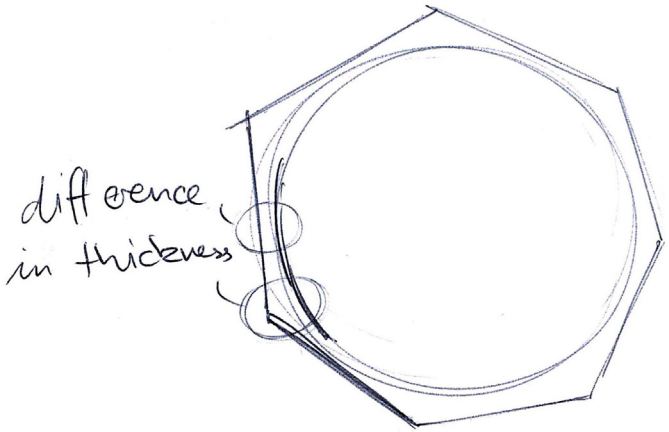

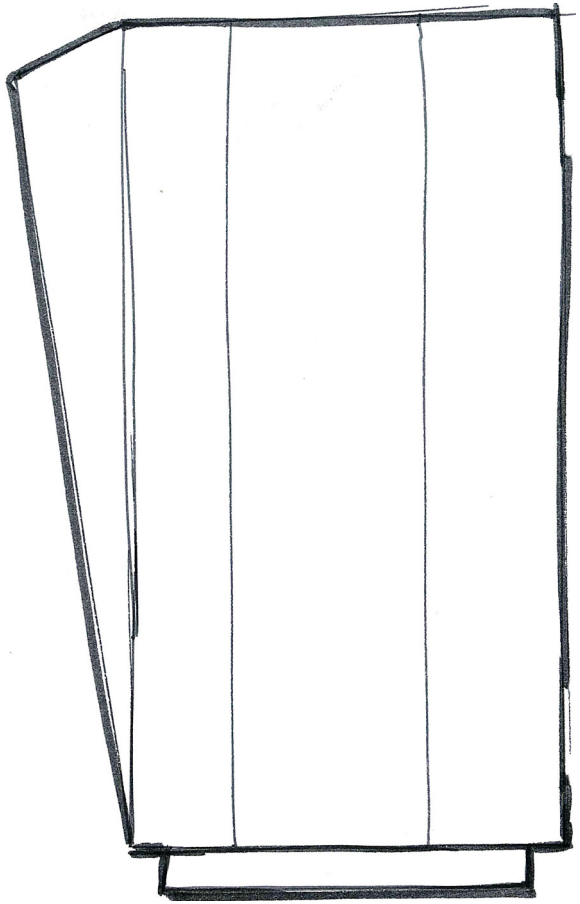

Moodboard and explanation of idea

+41 77 492 73 08 | raphael.cottier@cottier.ch

+41 79 842 27 78 | raphael.cottier@cottier.ch

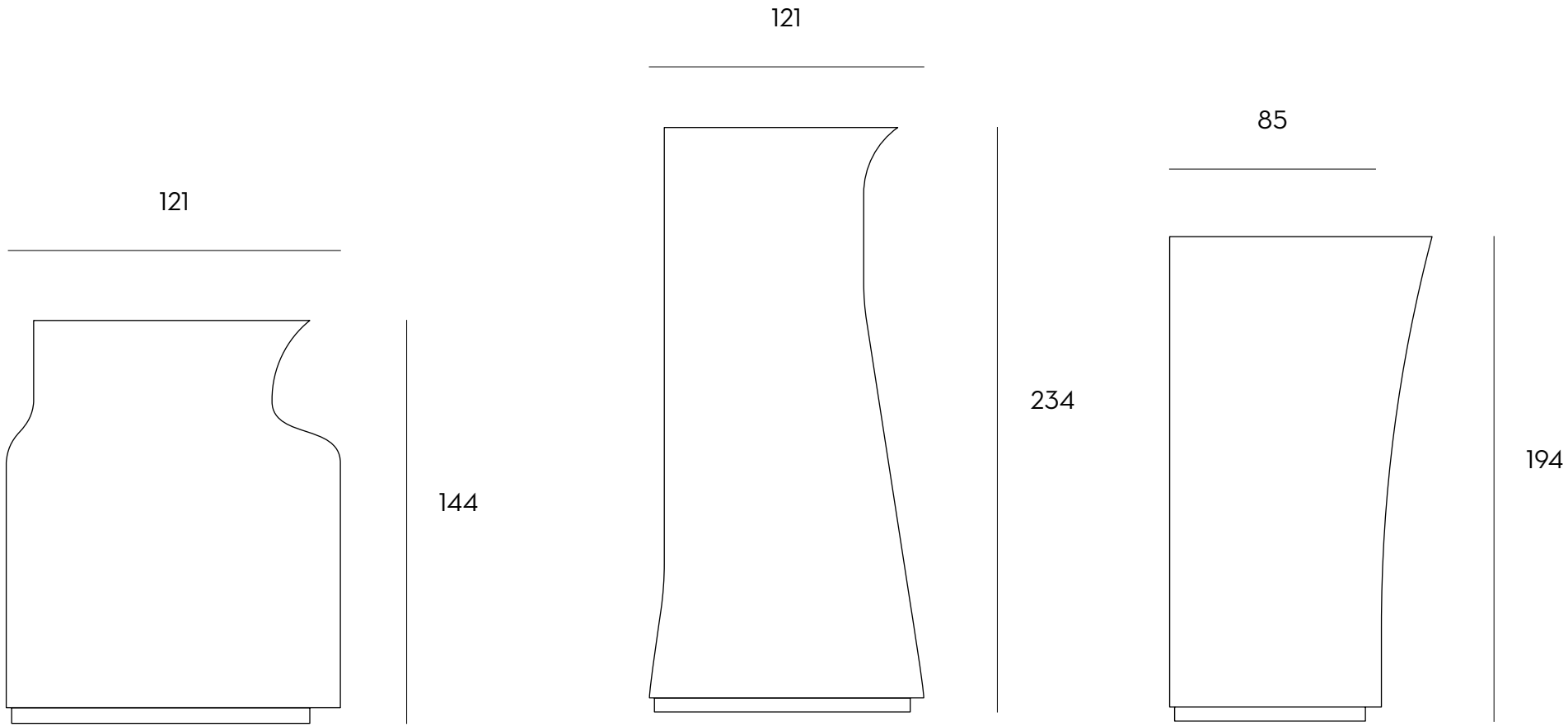

Basic dimensions (*mm*)

+41 77 492 73 08 | raphael.cottier@cottier.ch

4 Hat-Trick

Typology Portable Lamp
Where Domus Academy
When March/April 2020

Team Members Lorena Moreta, Daniele Ficarra, Raphael Cottier
My Roles Market & Technical Research, Micro-environments & Light Analysis, Writing

Rotaliana

Context

Students were asked to **hybridize an object** used inside of various domestic micro-environments **with a lamp**. **Hat-Trick** is the **marriage of a lamp with a bottle cap**, expanding the function of a simple bottle. The bottle is used inside many micro-environments such as the kitchen, the workplace, the dining table and even inside the bedroom.

Brief

The aim of **the brief** was to **think beyond** the **prevalent restrictions of lamps to single surfaces** to something that **can move from place to place unrestricted**. **Hat-Trick** is inspired by the **iconic appearances of each type of hat** with its respective social context, i.e. work/general with the bucket hat, party or relaxation for the sombrero and more formal contexts with the cylinder or top hat.

+41 77 492 73 08 | raphael.cottier@cottier.ch

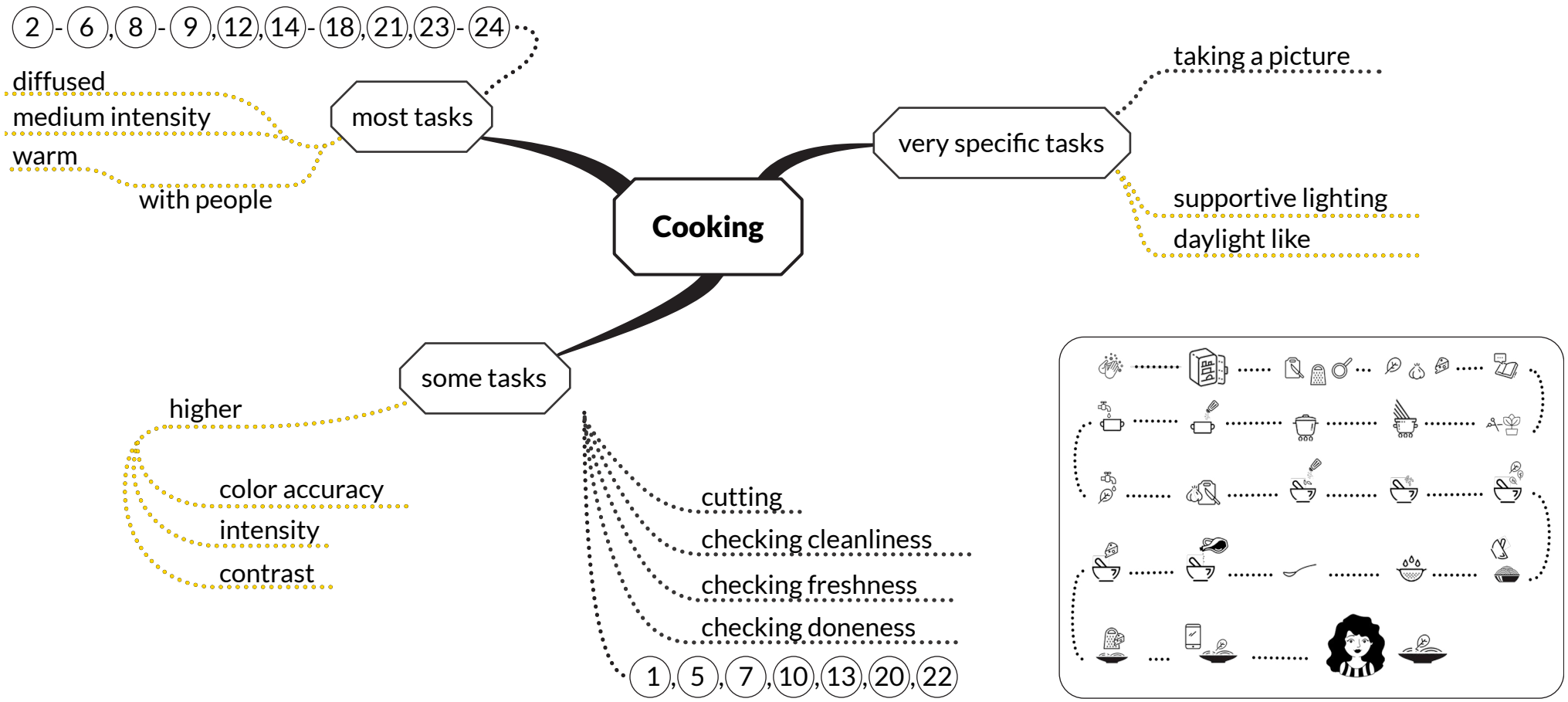

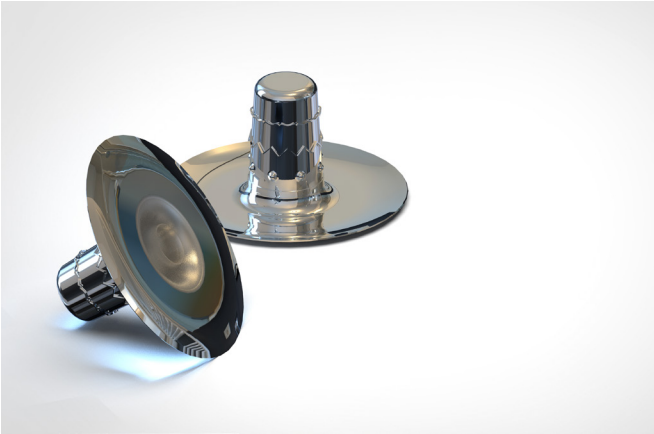

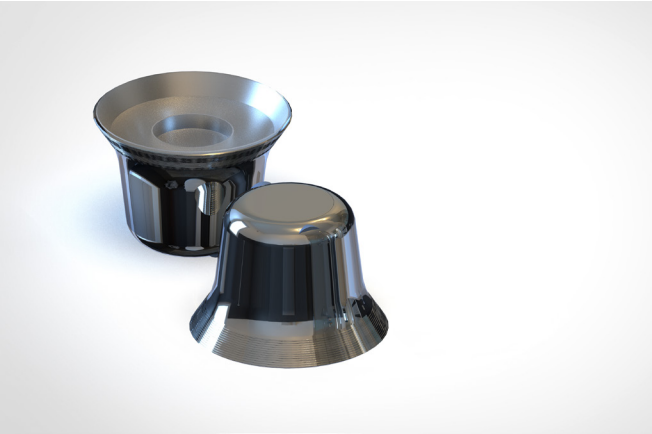

Light analysis based on user behavior (left detail) with renders

+41 77 492 73 08 | raphael.cottier@cottier.ch

+41 79 842 27 78 | raphael.cottier@cottier.ch

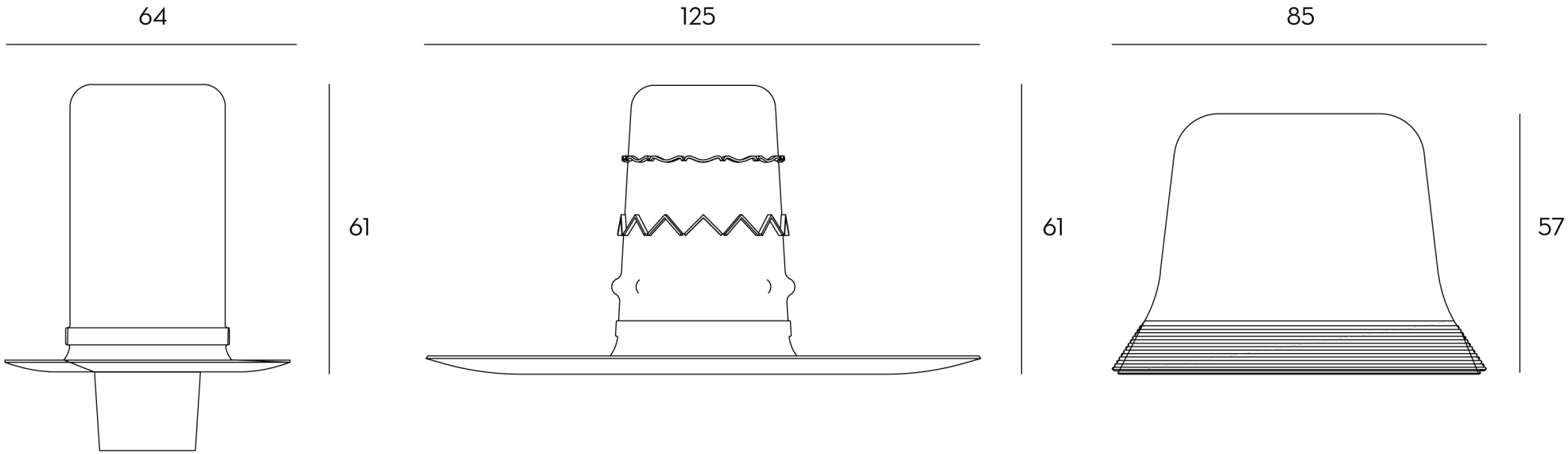

Basic dimensions in *mm*

+41 77 492 73 08 | raphael.cottier@cottier.ch

RAPHAEL COTTIER

raphael.cottier@cottier.ch
+41 77 492 73 08

Product Design Portfolio • 2022