SY6355B

Sink and Source DDR Termination Regulator

General Description

The SY6355B is a sink and source double data rate (DDR) regulator designed for use in low input voltage, low-cost, low-noise systems where space is a key consideration. It maintains a fast transient response and require a minimum ceramic output capacitance of only 10µF and all power requirement for DDR, DDR2, DDR3, DDR3L, Low-Power DDR3 and DDR4 VTT bus termination. Additionally, The VO(VTT) current capability is ±2A peak. The device supports all of the DDR power states, putting VO(VTT) to High-Z in S3 state (suspend to RAM) and discharging VO(VTT) and VOSNS in S4 or S5 state (suspend to disk).

The SY6355B is available in the 10-Pin, DFN2mm×2mm thermal pad package, and it's rated both Green and Pb-free. It's specified from -40℃ to 85℃.

Features

- Input Voltage: Supports 2.5V Rail and 3.3V Rail
- VLDOIN Voltage Range: 1.1V to 3.5V
- 2A Peak Sink and Source Current
- Sink and Source Termination Regulator Includes Droop Compensation
- Requires Minimum Ceramic Output Capacitance of 10uF for memory
- Support High-Z in S3 and Soft-Stop in S4 and S5 with S3 and S5 inputs
- Remote Sensing (VOSNS)
- ±10mA Buffered Reference (REFOUT)
- REFIN/2 ±1% Accuracy (REFOUT)
- Built-in Soft Start, UVLO, and OCL
- Thermal Shutdown
- Supports DDR, DDR2, DDR3, DDR3L, Low Power DDR3, DDR4 VTT Applications
- Packages: 10-Pin, DFN2mm×2mm With Thermal Pad

Ordering Information

SY6355 □(□□□)

- Package Code
- Optional Spec Code

Ordering Number	Package type	Note
SY6355BTDD	DFN2×2-10	----

Application

- Memory Termination Regulator for DDR, DDR2, DDR3, DDR3L, Low-Power DDR3 and DDR4
- Notebooks, Desktops, and Servers
- Base Stations

Typical Applications

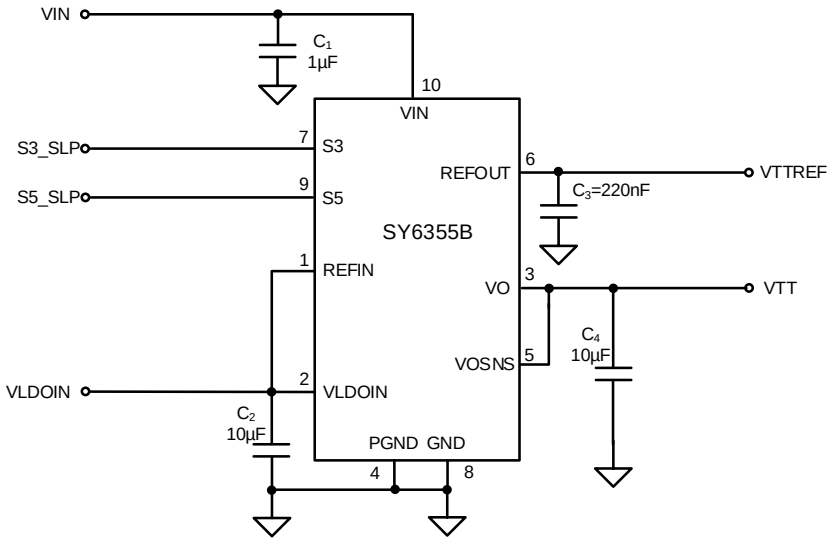

Figure 1. Schematic Diagram

© 2025 Silergy Corp. All Rights Reserved.

Pinout (Top View)

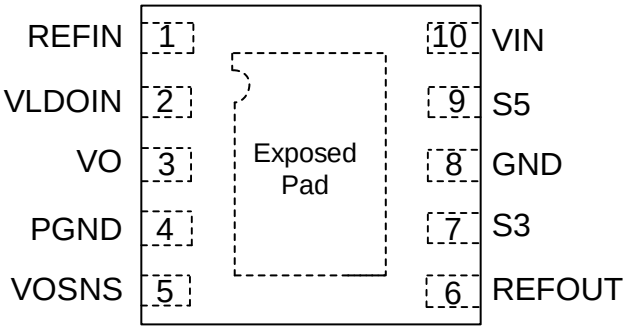

(DFN2×2-10)

Top Mark: **3hxyz** (Device code: 3h; ***x=year code, y=week code, z= lot number code***)

Pin Name	Pin Name	Pin Description
S3	7	S3 signal input
S5	9	S5 signal input
GND	8	Signal ground pin
PGND	4	Power ground pin for the LDO
REFIN	1	VLDOIN sense input, reference input for REFOUT
REFOUT	6	REFOUT buffered reference output. Need to connect 0.22μF or greater MLCC for stability
VIN	10	Input supply pin. A large bulk capacitance should be placed close to this pin to ensure that the input supply does not sag below the minimum VIN. A ceramic decoupling capacitor with a value between 1μF and 4.7μF is required.
VLDOIN	2	Supply voltage for the LDO.
VO	3	Power output pin for the LDO, need to connect 10μF or greater MLCC for stability.
VOSNS	5	Voltage sense input for the LDO. Connect to positive terminal of the output capacitor or load.
Exposed Pad	/	The exposed pad should be connected to ground plane for better thermal performance

© 2025 Silergy Corp. All Rights Reserved.

Block Diagram

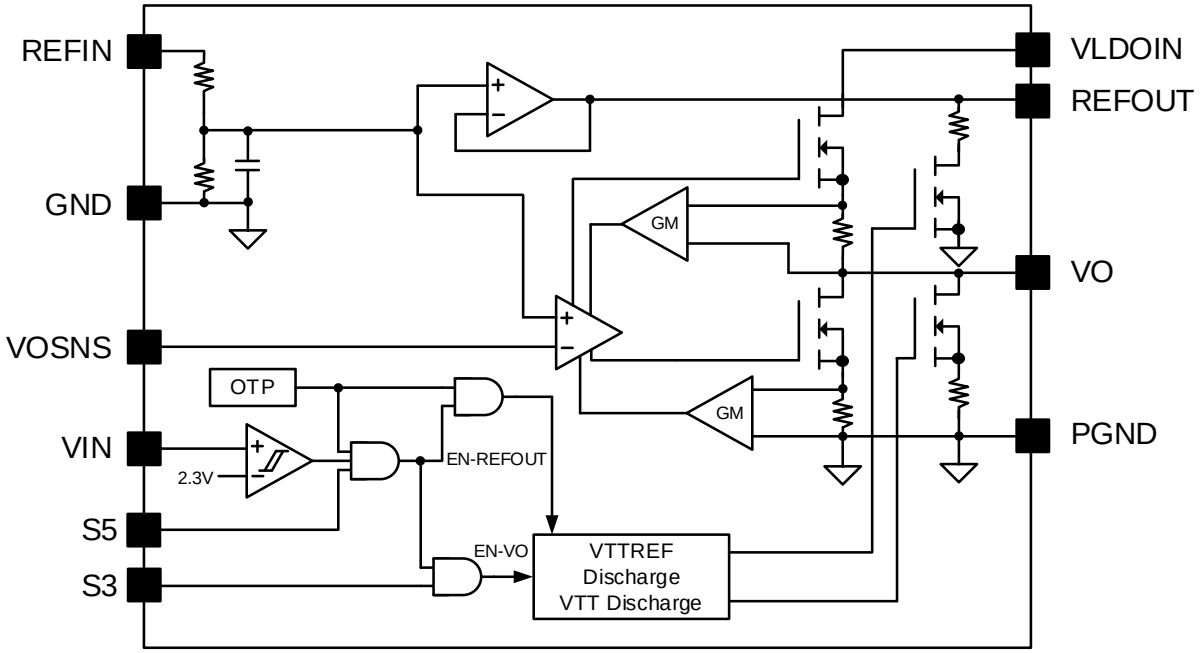

Figure 2. Block Diagram

Absolute Maximum Ratings (Note 1)

VIN, REFIN, REFOUT, VO, VLDOIN , VOSNS ---------- -0.3 to 3.6V
S3, S5 ---------- -0.3 to 7V
GND, PGND ---------- -0.3 to 0.3V
Power Dissipation, P_D @ T_A = 25°C ---------- 2W
Package Thermal Resistance (Note 2)
θ_{JA} ---------- 50°C/W
θ_{JC} ---------- 45°C/W
Junction Temperature Range ---------- -40°C to 150°C
Lead Temperature (Soldering, 10 sec.) ---------- 260°C
Storage Temperature Range ---------- -65°C to 150°C

Recommended Operating Conditions (Note 3)

VIN ---------- 2.375 to 3.5V
S3, S5 ---------- -0.1 to 6.5V
REFIN, REFOUT, VO, VLDOIN, VOSNS ---------- -0.1 to 3.5V
PGND ---------- -0.1 to 0.1V
Junction Temperature Range ---------- -40°C to 125°C
Ambient Temperature Range ---------- -40°C to 85°C

© 2025 Silergy Corp. All Rights Reserved.

Electrical Characteristics

V_{VIN}=3.3V, V_{S3}=V_{S5}=3V, V_{LDOIN}= V_{REFIN} =1.8V, C_{IN}=1μF, C_{OUT}=10μF, T_J=-40°C to 85°C, typical values are T_J=25°C, unless otherwise specified. The values are guaranteed by test, design or statistical correlation)

Parameter	Symbol	Test Conditions	Min	Typ	Max	Unit
SUPPLY CURRENT						
VIN Supply Current, in S0	$I_{IN(S0)}$	T_A=25 °C, No load, V_{S3}=V_{S5}=3V, V_{REFIN}=1.8V		0.7	1	mA
VIN Supply Current, in S3	$I_{IN(S3)}$	T_A=25 °C, No load, V_{S3}=0V, V_{S5}=3V, V_{REFIN}=1.8V		200	400	μA
VIN Shutdown Current, in S4 and S5	I_{VINSDN}	T_A=25 °C, No load, V_{S3}=V_{S5}=0V, V_{REFIN}=1.8V		2	5	μA
VLDOIN Supply Current, in S0	$I_{VLDOIN(S0)}$	T_A=25 °C, No load, V_{S3}=V_{S5}=3V, V_{VLDOIN}=1.8V		1	5	μA
VLDOIN Supply Current, in S3	$I_{VLDOIN(S3)}$	T_A=25 °C, No load, V_{S3}=0V, V_{S5}=3V, V_{VLDOIN}=1.8V		0.1	5	μA
VLDOIN Shutdown Current, in S4 and S5	$I_{VLDOINSDN}$	T_A=25 °C, No load, V_{S3}=V_{S5}=0V, V_{LDOIN}=1.8V			5	μA
VO OUTPUT						
Output Voltage	V_{VO}			V_{REFIN}/2		V
Output DC Voltage of VO	V_{VOSNS}	V_{REFIN} = 2.5 V(DDR1), I_{VO} = 0 A		1.25		V
			-15		15	mV
		V_{REFIN} = 1.8 V(DDR2), I_{VO} = 0 A		0.9		V
			-15		15	mV
		V_{REFIN} = 1.5 V(DDR3), I_{VO} = 0 A		0.75		V
			-15		15	mV
		V_{REFIN} = 1.35 V(DDR3L), I_{VO} = 0 A		0.675		V
			-15		15	mV
		V_{REFIN} = 1.2 V(DDR4), I_{VO} = 0 A		0.6		V
			-15		15	mV
Output Voltage Tolerance to V_{REFIN}/2	V_{VOTOL}	T_A=25 °C, -2 A< I_{VO} < 2 A	-25		25	mV
VO Source Current Limit	I_{VOSRCL}	V_{REFIN} = 1.8V, V_{VO} = V_{VOSNS} = 0.7V	2			A
VO Sink Current Limit	I_{VOSNCL}	V_{REFIN} = 1.8V, V_{VO} = V_{VOSNS} = 1.1V	2			A
Leakage Current	I_{VOLK}	T_A=25 °C, V_{S3}=0V, V_{S5}=3V, V_{VO}=V_{REFOUT} (Note 4)			5	μA
OUT Shutdown Discharge Resistance	R_{VODIS}	T_A=25 °C, V_{S3}=V_{S5}=V_{REFIN}=0V		14	25	Ω
REFIN INPUT						
REFIN Input Current	I_{REFIN}	V_{REFIN}=1.8V, V_{S3}=V_{S5} =3V		30		μA
REFOUT OUTPUT						
REFOUT Voltage	V_{REFOUT}			V_{REFIN}/2		V
REFOUT Voltage Tolerance to V_{REFIN}/2	$V_{REFOUTTOL}$	T_A=25 °C, -10mA< I_{REFOUT} < 10mA, 1.2V≤V_{REFIN} ≤1.8V	-12		12	mV
REFOUT Source Current Limit	$V_{REFOUTSRCL}$	V_{REFIN} = 1.8V, V_{REFOUT} = 0 V	10			mA
REFOUT Sink Current Limit	$V_{REFOUTSNCL}$	V_{REFIN} = 0V, V_{REFOUT} = 1.8 V	10			mA
REFOUT Shutdown Discharge Resistance	$R_{REFOUTDIS}$	V_{S3}=V_{S5}=V_{REFIN}=0V		90		Ω
UVLO/LOGIC THRESHOLD						

© 2025 Silergy Corp. All Rights Reserved.

Parameter	Symbol	Test Conditions	Min	Typ	Max	Unit
UVLO Threshold	$V_{VINUVVIN}$	Wake up	2.2	2.3	2.375	V
		Hysteresis		50		mV
S3 and S5 High-Level Input Voltage	V_{ENIH}	Enable	1.2			V
S3 and S5 Low-Level Input Voltage	V_{ENIL}	Enable			0.3	
S3 and S5 Hysteresis Voltage	V_{ENYST}	Enable		0.1		
S3 and S5 Input Leakage Current	I_{ENLEAK}	Enable	-1		1	μA
OVER TEMPERATURE PROTECTION						
Thermal Shutdown Threshold	T_{SD}	(Note 4)		150		°C
Thermal Shutdown Hysteresis	T_{HYS}	(Note 4)		20		°C

Note 1: Stresses beyond "Absolute Maximum Ratings" may cause permanent damage to the device. These are for stress ratings. Functional operation of the device at these or any other conditions beyond those indicated in the operational sections of the specifications is not implied. Exposure to absolute maximum rating conditions may affect device reliability.

Note 2: θ_{JA} is simulated in the natural convection at T_A = 25°C on Silergy EVB test board.

Note 3: The device is not guaranteed to function outside its operating conditions.

Note 4: Guaranteed by design, not subject to test.

© 2025 Silergy Corp. All Rights Reserved.

Typical Operating Characteristics

Supply Current of VIN in S0 vs. Input Voltage
(V_{S3}=V_{S5}=3V, V_{REFIN}=1.8V)

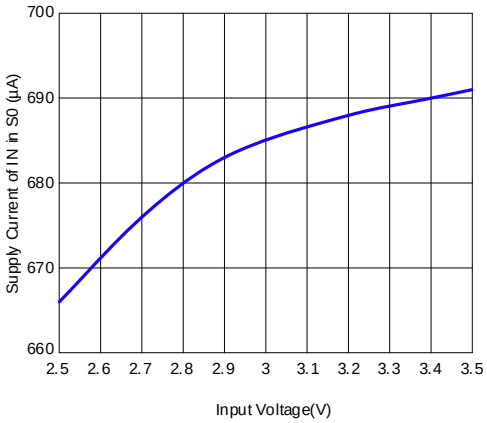

Supply Current of VIN in S3 vs. Input Voltage
(V_{S3}=0V, V_{S5}=3V, V_{REFIN}=1.8V)

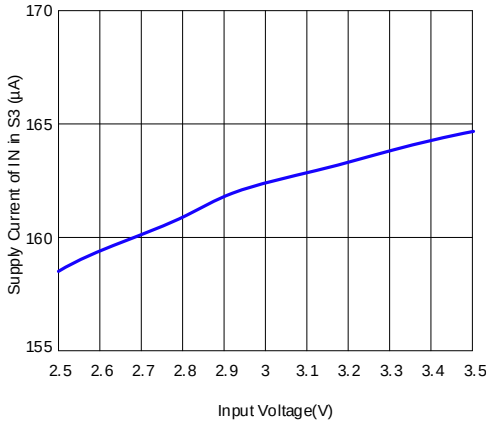

Supply Current of VIN in S4 S5 vs. Input Voltage
(V_{S3}=V_{S5}=0V, V_{REFIN}=1.8V)

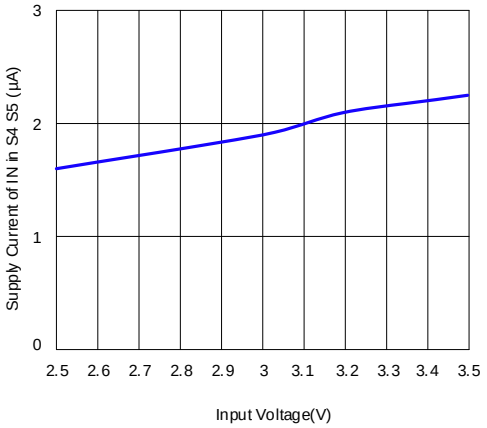

S3/S5 Threshold vs. Input Voltage
(V_{REFIN}=1.8V)

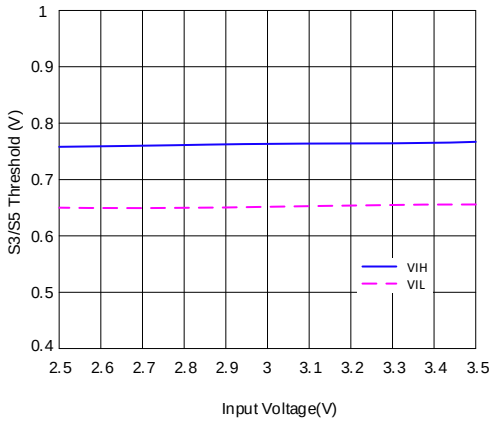

VO Load Regulation (0.6 V)
(V_{IN}=3.3V, V_{REFIN}=1.2V)

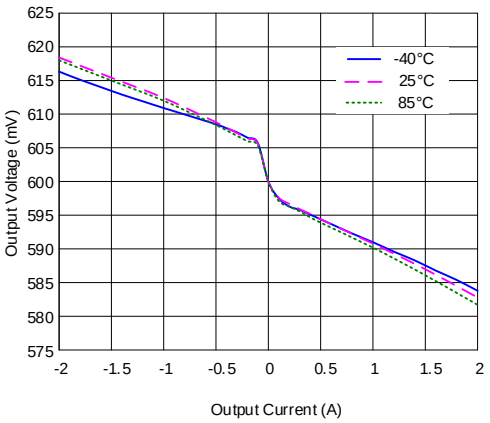

VO Load Regulation (0.675 V)
(V_{IN}=3.3V, V_{REFIN}=1.35V)

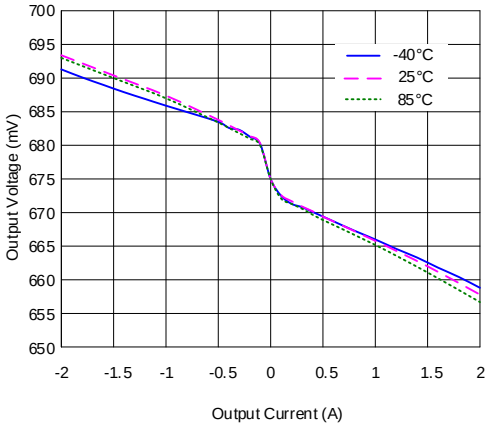

© 2025 Silergy Corp. All Rights Reserved.

VO Load Regulation (0.75 V)
(V_{IN}=3.3V, V_{REFIN}=1.5V)

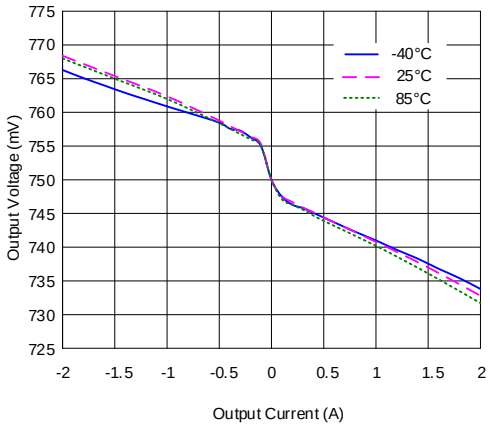

VO Load Regulation (0.9 V)
(V_{IN}=3.3V, V_{REFIN}=1.8V)

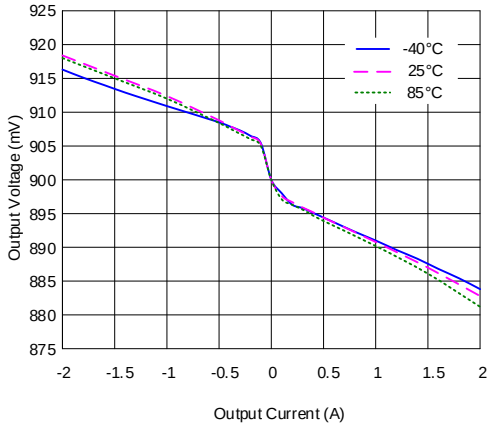

REFOUT Load Regulation (0.6 V)
(V_{IN}=3.3V, V_{REFIN}=1.2V)

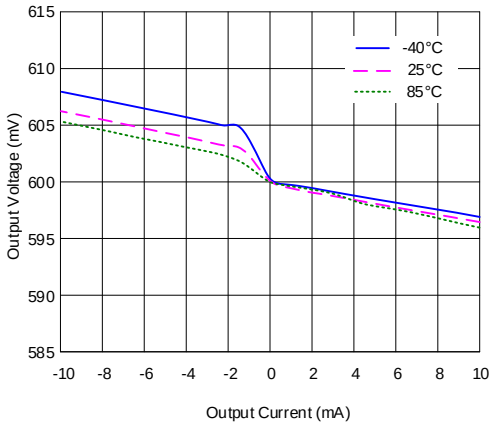

REFOUT Load Regulation (0.675 V)
(V_{IN}=3.3V, V_{REFIN}=1.35V)

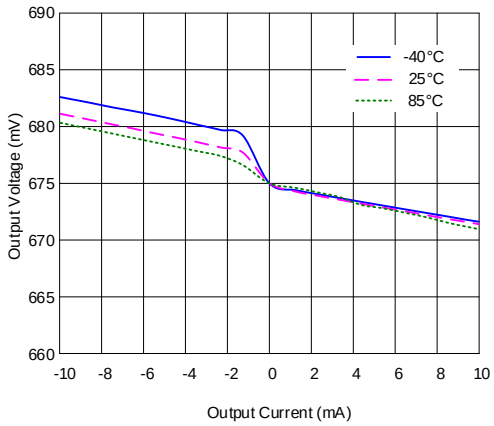

REFOUT Load Regulation (0.75 V)
(V_{IN}=3.3V, V_{REFIN}=1.5V)

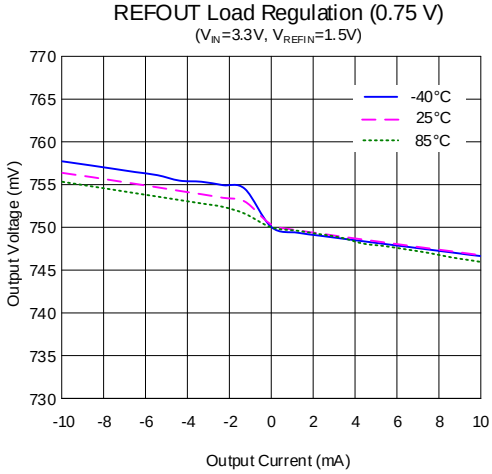

REFOUT Load Regulation (0.9 V)
(V_{IN}=3.3V, V_{REFIN}=1.8V)

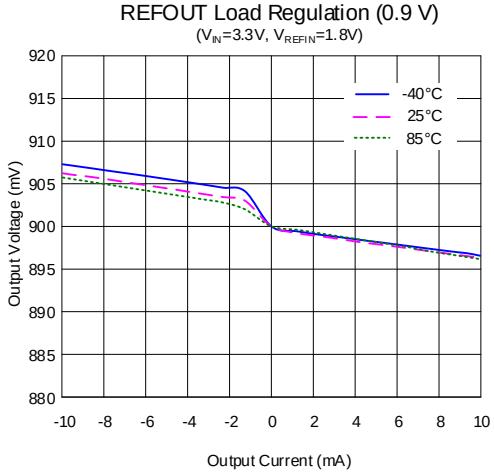

© 2025 Silergy Corp. All Rights Reserved.

Startup from S5

(V_{IN}=V_{S3}=3.3V, V_{REFIN}=1.8V, C_{VO}=10μF, S5 ON, 0.45Ω Load)

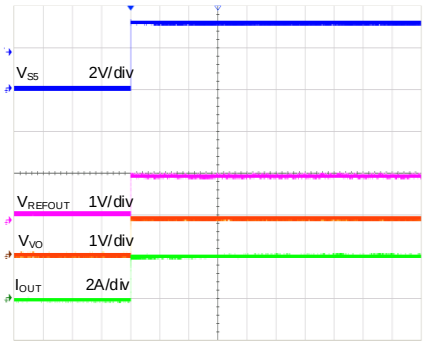

Time(10ms/div)

Shutdown from S5

(V_{IN}=V_{S3}=3.3V, V_{REFIN}=1.8V, C_{VO}=10μF, S5 OFF, 0.45Ω Load)

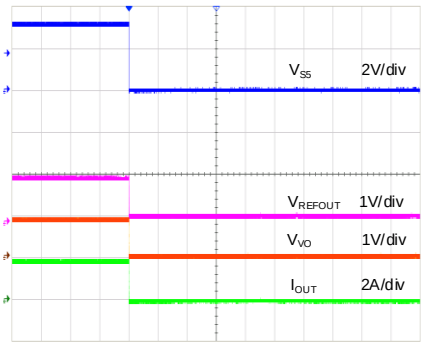

Time(10ms/div)

Startup from S3

(V_{IN}=V_{S5}=3.3V, V_{REFIN}=1.8V, C_{VO}=10μF, S3 ON, 0.45Ω Load)

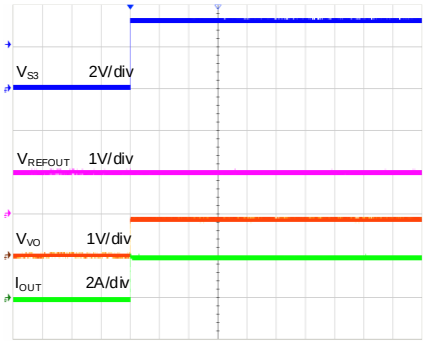

Time(10ms/div)

Shutdown from S3

(V_{IN}=V_{S5}=3.3V, V_{REFIN}=1.8V, C_{VO}=10μF, S3 OFF, 0.45Ω Load)

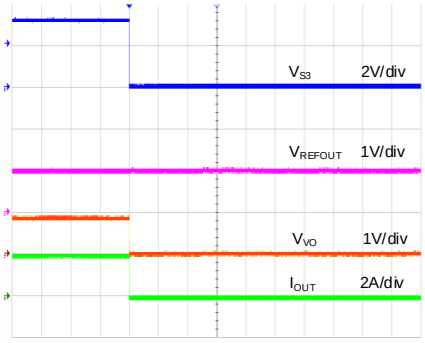

Time(10ms/div)

Startup from V_{IN}

(V_{S3}=V_{S5}=3.3V, V_{REFIN}=1.8V, C_{VO}=10μF, V_{IN}=0V→3V, 0.45Ω Load)

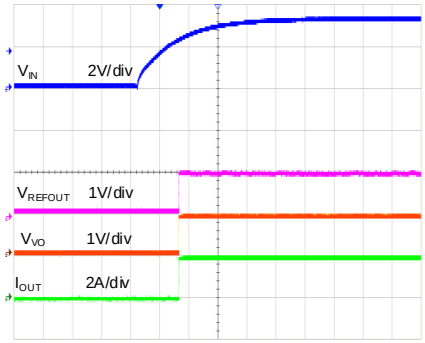

Time(20ms/div)

Shutdown from V_{IN}

(V_{S3}=V_{S5}=3.3V, V_{REFIN}=1.8V, C_{VO}=10μF, V_{IN}=3V→0V, 0.45Ω Load)

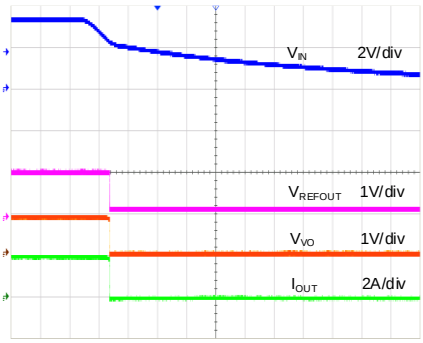

Time(20ms/div)

© 2025 Silergy Corp. All Rights Reserved.

Short Circuit Response

(V_{IN}=V_{LDOIN}=3.5V, V_{REFIN}=1.8V)

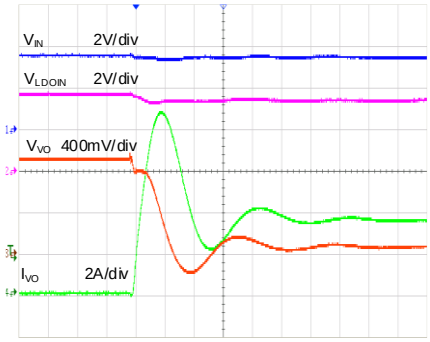

Time(2μs/div)

VO Load Transient Response (0.75 V)

(V_{IN}=3.3V, V_{REFIN}=1.5V)

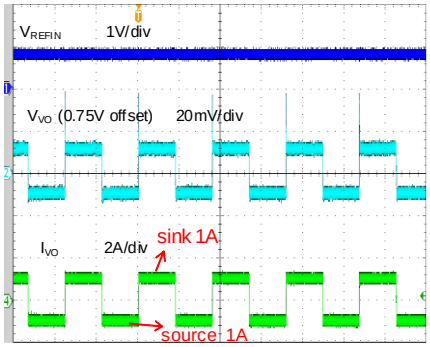

Time(4ms/div)

Bode Plot of VO Sink 1A

(V_{IN}=3.3V, V_{REFIN}=1.5V, sink 1A load)

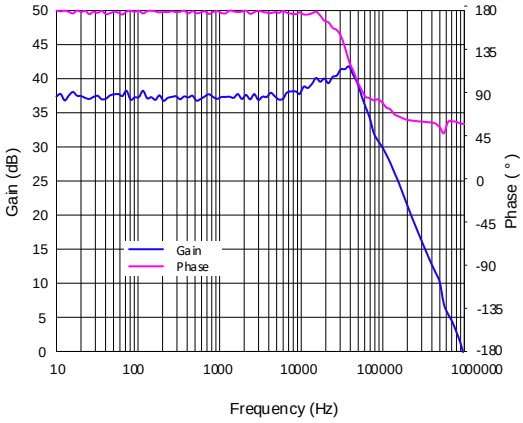

Bode Plot of VO Source 1A

(V_{IN}=3.3V, V_{REFIN}=1.5V, source 1A load)

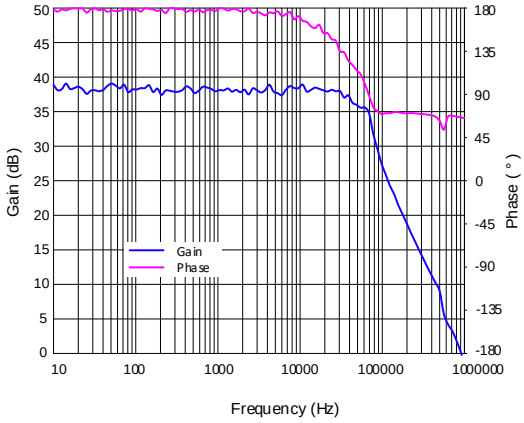

© 2025 Silergy Corp. All Rights Reserved.

Application Information

1. OVERVIEW

The SY6355B is a sink or source tracking termination regulator specifically designed for low input voltage, low cost, and low external component count systems where space is a key application parameter. The SY6355B integrates a high-performance, low-dropout (LDO) linear regulator that has ultimate fast response to track ½ REFIN within 25 mV at all conditions, and its current capability is 2 A for both sink and source directions. A 10µF (or greater) ceramic capacitor(s) need to be attached close to the VO terminal for stable operation. A grade of X5R or better is recommended. To achieve tight regulation with minimum effect of trace resistance, the remote sensing terminal, VOSNS, should be connected to the positive terminal of the output capacitor(s) as a separate trace from the high current path from the VO pin.

The device has a dedicated pin, VLDOIN, for VO power supply to minimize the LDO power dissipation on user application.

2. REFOUT Output Function

The REFOUT pin includes 10 mA of sink or source current capability, and tracks ½ of REFIN with ±1% accuracy. A 0.22µF ceramic capacitor needs to be attached close to the REFOUT terminal for stable operation; X5R or better grade is recommended.

3. VIN Under Voltage Lockout Protection

The SY6355B input voltage (VIN) includes under voltage lockout protection (UVLO). When the VIN pin voltage is lower than UVLO threshold voltage, VO and REFOUT are shut off. This is non-latch protection.

4. Over Temperature Protection

This device features internal temperature monitoring. If the temperature exceeds the threshold value, REFOUT is shut off. This is a non-latch protection.

5. Power State Control

The SY6355B has two input pins, S3 and S5, to provide simple control of the power state. Table 1 describes S3 and S5 terminal logic state and corresponding state of REFOUT and VO outputs. VO is turn-off and placed to high impedance (High-Z) state in S3. The VO output is floated and does not sink or source current in this state. When both S5 and S3 pins are LOW, the power state is set to S4 and S5. In S4 and S5 state, all the outputs are turn-off and discharged to GND.

Table1. S3 and S5 Control Table

STATE	S3	S5	REFOUT	VO(VTT)
S0	HI	HI	ON	ON
S4 and S5	HI	LO	OFF (Discharge)	OFF(Discharge)
S3	LO	HI	ON	OFF(High-Z)
S4 and S5	LO	LO	OFF (Discharge)	OFF(Discharge)

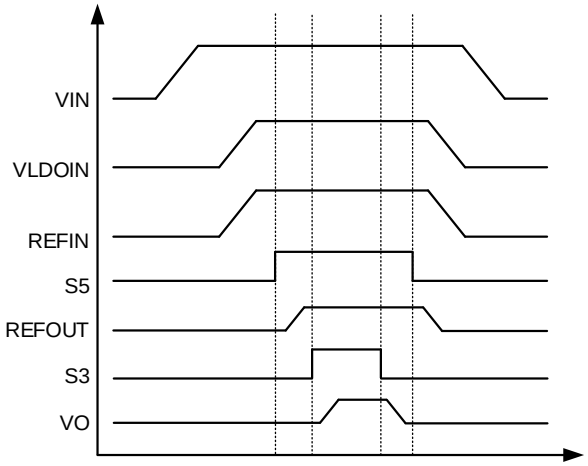

Figure 3. Typical Timing Diagram

6. Supply Filter Capacitor

Add a ceramic capacitor, with a value between 1µF and 4.7µF, placed close to the VIN pin, to stabilize the bias supply (2.5-V rail or 3.3-V rail) from any parasitic impedance from the supply.

7. VLDOIN Input Capacitor

Depending on the trace impedance between the VLDOIN bulk power supply to the device, a transient increase of source current is supplied mostly by the charge from the VLDOIN input capacitor. Use a 10µF (or greater) ceramic capacitor to supply this transient charge.

8. Output Filter Capacitor

For stable operation, the capacitance of the VO output pin is recommended to use a-10µF (or greater). Attach a 10-µF ceramic capacitors to minimize the effect of equivalent series resistance (ESR) and equivalent series inductance (ESL).

9. PCB Layout Guide

For best performance of the SY6355B, the following guidelines must be strictly followed:

© 2025 Silergy Corp. All Rights Reserved.

1. Please solder the exposed pad on the system ground pad on the top-layer of PCBs. The ground pad must have wide size to conduct heat into the ambient air through the system ground plane and PCB as a heat sink.

2. Please place the input capacitors for VIN pin as close as possible for decoupling high-frequency ripples.

3. Please place the input capacitors as close to VLDOIN pin as possible with short and wide connection to minimize the impedance of the layout.

4. Please place the output capacitor as close to VO pin as possible with short and wide connection to minimize the impedance of the layout. If output capacitors need to be placed on the load side for excellent load transient response, please leave a ceramic capacitor with a value of at least 10μF near the VO pin as close as possible.

5. Connect the VOSNS pin to the positive node of output capacitors as a separate trace. In DDR VTT application, connect the VO sense trace to DIMM side to ensure the VTT voltage at DIMM side is well regulated.

6. Connect the GND pin and PGND pin to the thermal pad directly.

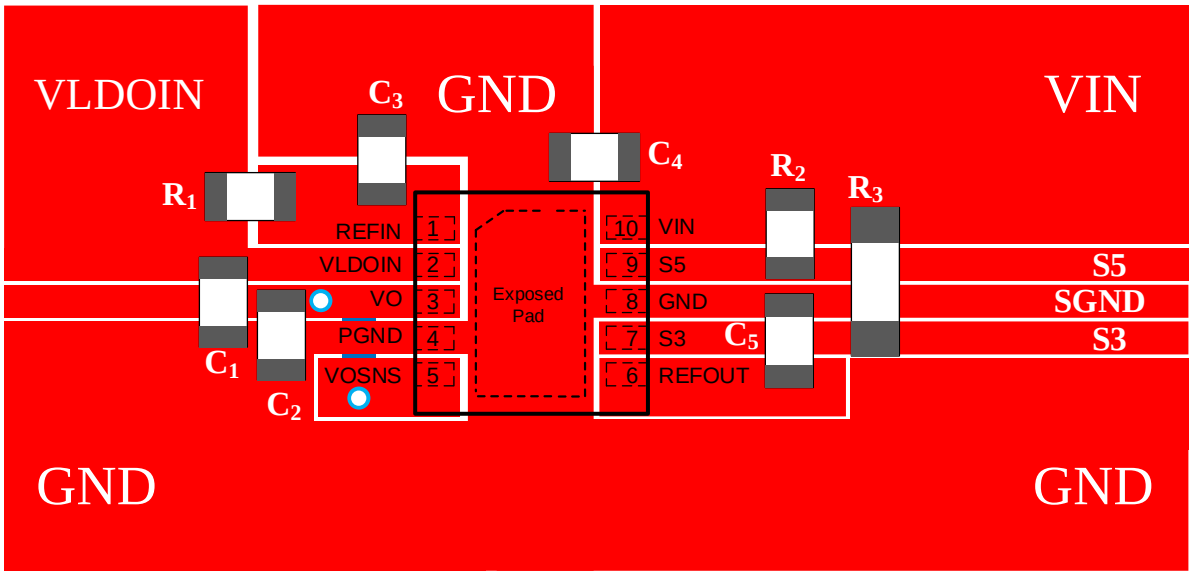

Figure 4. SY6355B PCB Layout Suggestion

© 2025 Silergy Corp. All Rights Reserved.

DFN2×2-10 Package Outline Drawing

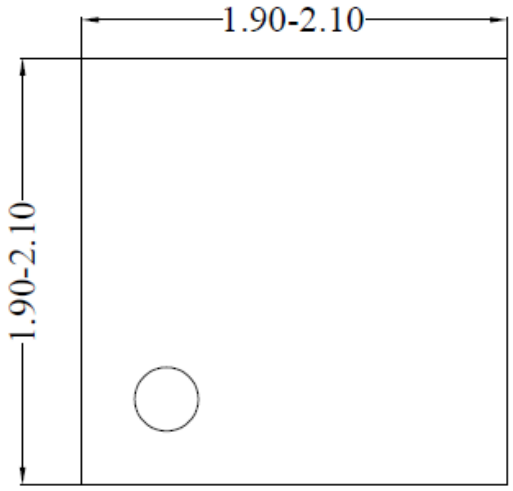

Top View

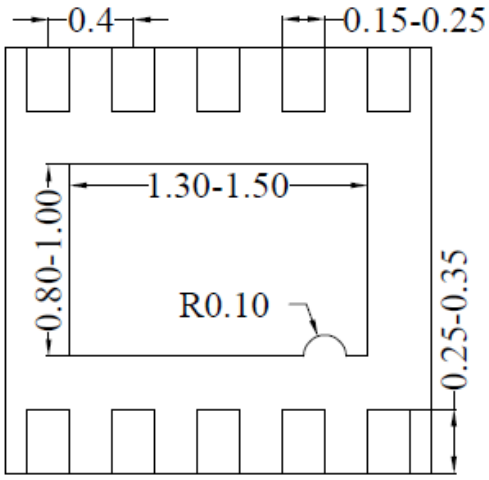

Bottom view

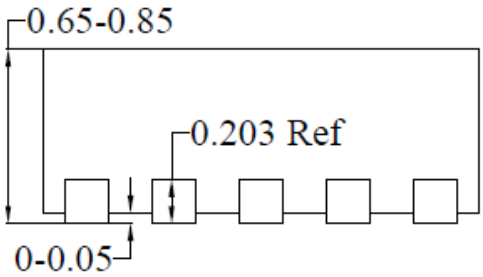

Front View

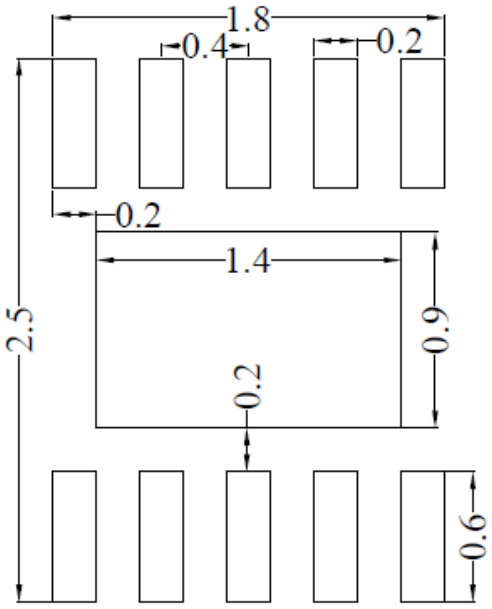

Recommended PCB layout
(only for reference)

Notes: 1, All dimension in millimeter and exclude mold flash & metal burr.

© 2025 Silergy Corp. All Rights Reserved.

Taping & Reel Specification

1. Taping orientation

DFN2×2

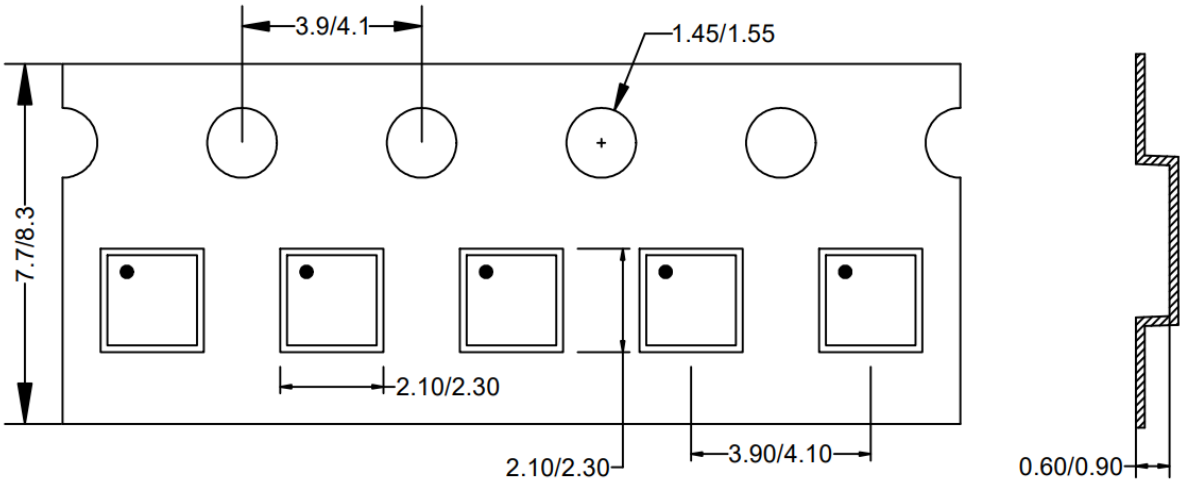

Feeding direction ⟶

2. Carrier Tape & Reel specification for packages

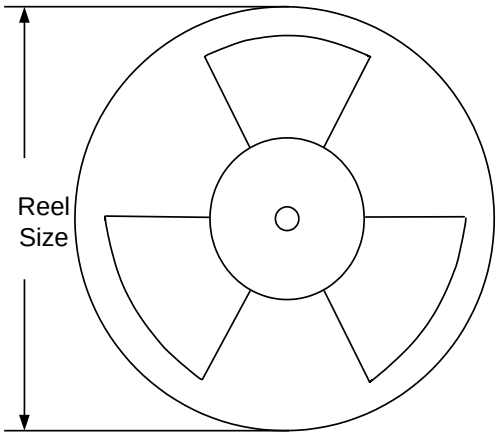

Package type	Tape width (mm)	Pocket pitch(mm)	Reel size (Inch)	Trailer length(mm)	Leader length (mm)	Qty per reel (pcs)
DFN2×2	8	4	7"	400	160	3000

Others: NA

© 2025 Silergy Corp. All Rights Reserved.

Revision History

The revision history provided is for informational purpose only and is believed to be accurate, however, not warranted. Please make sure that you have the latest revision.

Date	Revision	Change
Sep.05, 2023	Revision 1.0	Initial Production Release
May 09, 2023	Revision 0.9B	1. Add Note 4 for Leakage Current in EC table (page 4)； 2. Add Taping & Reel Spec (Note 13)
Jan.17, 2023	Revision 0.9A	Device code changed from **f5 to 3h**
Sep. 05, 2022	Revision 0.9	Initial Release

© 2025 Silergy Corp. All Rights Reserved.

IMPORTANT NOTICE

1. **Right to make changes.** Silergy and its subsidiaries (hereafter Silergy) reserve the right to change any information published in this document, including but not limited to circuitry, specification and/or product design, manufacturing or descriptions, at any time and without notice. This document supersedes and replaces all information supplied prior to the publication hereof. Buyers should obtain the latest relevant information before placing orders and should verify that such information is current and complete. All semiconductor products are sold subject to Silergy's standard terms and conditions of sale.

2. Applications. Application examples that are described herein for any of these products are for illustrative purposes only. Silergy makes no representation or warranty that such applications will be suitable for the specified use without further testing or modification. Buyers are responsible for the design and operation of their applications and products using Silergy products. Silergy or its subsidiaries assume no liability for any application assistance or designs of customer products. It is customer's sole responsibility to determine whether the Silergy product is suitable and fit for the customer's applications and products planned. To minimize the risks associated with customer's products and applications, customer should provide adequate design and operating safeguards. Customer represents and agrees that it has all the necessary expertise to create and implement safeguards which anticipate dangerous consequences of failures, monitor failures and their consequences, lessen the likelihood of failures that might cause harm and take appropriate remedial actions. Silergy assumes no liability related to any default, damage, costs or problem in the customer's applications or products, or the application or use by customer's third-party buyers. Customer will fully indemnify Silergy, its subsidiaries, and their representatives against any damages arising out of the use of any Silergy components in safety-critical applications. It is also buyers' sole responsibility to warrant and guarantee that any intellectual property rights of a third party are not infringed upon when integrating Silergy products into any application. Silergy assumes no responsibility for any said applications or for any use of any circuitry other than circuitry entirely embodied in a Silergy product.

3. **Limited warranty and liability.** Information furnished by Silergy in this document is believed to be accurate and reliable. However, Silergy makes no representation or warranty, expressed or implied, as to the accuracy or completeness of such information and shall have no liability for the consequences of use of such information. In no event shall Silergy be liable for any indirect, incidental, punitive, special or consequential damages, including but not limited to lost profits, lost savings, business interruption, costs related to the removal or replacement of any products or rework charges, whether or not such damages are based on tort or negligence, warranty, breach of contract or any other legal theory. Notwithstanding any damages that customer might incur for any reason whatsoever, Silergy' aggregate and cumulative liability towards customer for the products described herein shall be limited in accordance with the Standard Terms and Conditions of Sale of Silergy.

4. **Suitability for use.** Customer acknowledges and agrees that it is solely responsible for compliance with all legal, regulatory and safety-related requirements concerning its products, and any use of Silergy components in its applications, notwithstanding any applications-related information or support that may be provided by Silergy. Silergy products are not designed, authorized or warranted to be suitable for use in life support, life-critical or safety-critical systems or equipment, nor in applications where failure or malfunction of a Silergy product can reasonably be expected to result in personal injury, death or severe property or environmental damage. Silergy assumes no liability for inclusion and/or use of Silergy products in such equipment or applications and therefore such inclusion and/or use is at the customer's own risk.

5. **Terms and conditions of commercial sale**. Silergy products are sold subject to the standard terms and conditions of commercial sale, as published at http://www.silergy.com/stdterms, unless otherwise agreed in a valid written individual agreement specifically agreed to in writing by an authorized officer of Silergy. In case an individual agreement is concluded only the terms and conditions of the respective agreement shall apply. Silergy hereby expressly objects to and denies the application of any customer's general terms and conditions with regard to the purchase of Silergy products by the customer.

6. **No offer to sell or license**. Nothing in this document may be interpreted or construed as an offer to sell products that is open for acceptance or the grant, conveyance or implication of any license under any copyrights, patents or other industrial or intellectual property rights. Silergy makes no representation or warranty that any license, either express or implied, is granted under any patent right, copyright, mask work right, or other intellectual property right. Information published by Silergy regarding third-party products or services does not constitute a license to use such products or services or a warranty or endorsement thereof. Use of such information may require a license from a third party under the patents or other intellectual property of the third party, or a license from Silergy under the patents or other intellectual property of Silergy.

For more information, please visit: www.silergy.com

© 2025 Silergy Corp. **All Rights Reserved.**

© 2025 Silergy Corp. All Rights Reserved.