General Description

The CL8060 is a powerful, highly integrated, Wi-Fi 6 (802.11ax) R2 chip employing a disruptive concurrent dual-band (5GHz & 2.4GHz), dual-function, dual transceiver 4T4R+2T2R (total of 6T6R) MIMO architecture, that can drive up to 5.4Gbps PHY / Data Link Speed for concurrent dual band operation in a single chip.

802.11ax functionality includes MU-OFDMA, MU-MIMO, beamforming, TWT, trigger-based scheduling, 1024QAM and 160MHz support. The chip architecture introduces dynamic MAC and PHY improvements to perfect throughput and coverage in dense environments, the CL8060 product significantly raises the bar on Wi-Fi performance, range, flexibility and reliability.

The product integrates dual MAC, dual PHY, analog and RF in a single package, including the required CPUs and memories to run more of the wireless LAN functions on-chip, eliminating the need for costly external memories. Interface to the host is over a dual lane PCIe 3.0 (backward compatible with earlier PCIe versions).

The dual integrated Wi-Fi transceivers are of independent functional setting, allowing a diverse range of applications, use cases and operational modes, for example:

Transceiver 0	Transceiver 1	Details
AP	AP	Dual concurrent access point
AP	STA	Extender - Transceiver1 used for backhaul
AP	Repeater	Repeater - Transceiver1 used for backhaul & front-haul
Repeater	Repeater	Both transceivers may act as backhaul & front-haul (e.g. under mesh with dynamic backhaul selection)

The CL8060 is designed to support standard based features addressing security, Quality of Service and international regulation, as well as above standard integrated value-add functionalities based on Renesas's embedded and edge software technologies, giving end users the greatest performance anytime under any circumstance, while enabling OEMs and service providers advanced management capabilities for enhanced services and operation.

The CL8060 supports Smart Antenna Steering (SAS) enabling the use of multiple antenna elements per PHY for greater diversity, system performance and flexibility, as well as 3-4 wire coexistence interface for better spectrum sharing with other 2.4GHz radio systems such as BT, Zigbee, Thread of other IoT radios.

Each of CL8060 transceivers is equipped with DFS circuitry.

The rich RF Frontend Module controls enables simple integration with any known 11ax frontend, enabling higher flexibility in hardware design and part selection.

Renesas Confidential
5961445367@qq.com
February 26, 2026

© 2024 Renesas Electronics

Applications

The following applications are supported:

- Cable, DSL, Fiber, Ethernet Gateway for Data and Video Distribution
- Enterprise & SMB Access Point
- Carrier-Grade Unified Home-Gateway
- Carrier-Grade Home-Networking & Mesh Nodes
- Wi-Fi-enabled Set-Top Boxes and Hybrid DVB-S/C/T
- Bandwidth intense Connected Things

System Diagram

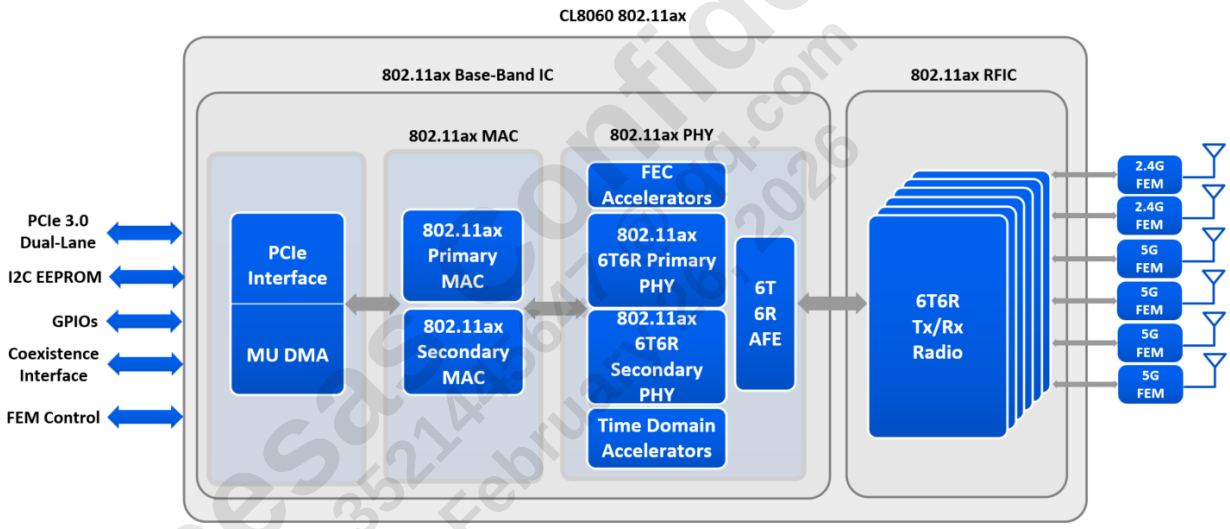

Figure 1: System Diagram

Renesas Confidential
3521445647@163.com
February 11, 2026

© 2024 Renesas Electronics

Contents

General Description **1**
Applications **2**
System Diagram **2**
Contents **3**
Figures **4**
Tables **4**
1 Terms and Definitions **5**
2 Key Features **5**
2.1 System 5
2.2 Wi-Fi 5
2.3 Interfaces 6
2.4 Package 6
3 Pin Description and PCB Guidelines **7**
3.1 Signals Functional Diagram 7
3.2 Ball Layout (Top View) 8
3.3 Ball Description 9
3.4 Power Up and Down Sequence 13
3.5 Guidelines to I²C signals: SCL, SDA 13
4 Electrical Characteristics **14**
4.1 Absolute Maximum Ratings 14
4.2 Recommended Operating Ranges 14
4.3 Thermal Characteristics 14
4.4 DC Characteristics for Digital Pins 15
4.5 Current Consumption 15
4.6 Xtal Specifications 16
4.7 External Temperature Sensor Specifications 16
4.8 PCIe Reference Clock Specification 17
5 RF Specifications **18**
5.1 2.4GHz band RF Receiver Specifications 18
5.2 2.4GHz band RF Transmitter Specifications 20
5.3 5GHz band RF Receiver Specifications 20
5.4 5GHz band RF Transmitter Specifications 23
6 Package Information **23**
6.1 Mechanical Drawing 23
6.2 Package marking 24
6.3 Moisture Sensitivity Level (MSL) 24
6.4 Soldering Information 24
6.4.1 Recommended Condition for Reflow Soldering 24
7 Ordering Information **26**
Revision History **27**

Renesas Confidential
3521445647 @ qq.com
February 26, 2026

 © 2024 Renesas Electronics

Figures

Figure 1: System Diagram 2
Figure 2: CL8060 Pinout Diagram 7
Figure 3: Mechanical Drawing 23
Figure 4: CL8060 Package Outline Drawing 24
Figure 5: Reflow Soldering 25

Tables

Table 1: Ball Description 9
Table 2: Ball Supplies Description 12
Table 3: Absolute Maximum Ratings 14
Table 4: Recommended Operating Ranges 14
Table 5: Thermal Characteristics 14
Table 6: DC Characteristics for Digital Pins 15
Table 7: Current Consumption 15
Table 8: Xtal Specifications 16
Table 9: External Temperature Sensor Specifications 16
Table 10: PCIe Reference Clock Specification 17
Table 11: 2.4GHz band RF Receiver Specifications 18
Table 12: 2.4GHz band RF Transmitter Specifications 20
Table 13: 5GHz band RF Receiver Specifications 20
Table 14: 5GHz band RF Transmitter Specifications 23

Renesas Confidential
3521445@qq.com
February 26, 2026

 © 2024 Renesas Electronics

1 Terms and Definitions

PCB	Printed circuit board
SCL	Serial clock
SDA	Serial data
PCIe	Peripheral component interconnect express
MSL	Moisture sensitivity level
MIMO	Multiple input multiple output

2 Key Features

2.1 System

- CMOS Technology with RF, Baseband, and MAC Integrated.
- Concurrent Dual Band, Dual Transceiver, Dual Function
- 4T4R+2T2R (total of 6T6R) MIMO Architecture
- 5.4Gbps (4.8Gbps + 0.6Gbps) concurrent data link speed
- PHY & MAC partitioned to SW & HW – the SDR architecture allows evolution in field
- Enhanced spectrum coverage, ready for UNII-4 (up to 5925 MHz)
- Low Power consumption with Advanced Power Management
- Green-AP mode meeting CoC requirements

2.2 Wi-Fi

- Wi-Fi 6 (802.11ax) R2 support
- 802.11a/b/g/n/ac support
- DL/UL MU-OFDMA support
- DL MU-MIMO support
- Beam Forming support
- Uplink Scheduling
- QAM 1024 (MCS 10, 11) modulation
- 20 / 40 / 80 / 160 MHz support in 5GHz
- 20 / 40 MHz support in 2.4GHz
- Target-Wait-Time
- Supports High Efficiency, Very High Throughput, High Throughput and Legacy
- Spatial Multiplexing, Cyclic-Delay Diversity (CDD), and Maximum Receive Ratio Combine (MRC) support
- Low Density Parity Check (LDPC) code support
- Clear Channel Assessment (CCA) on Secondary
- Frame Aggregation and Block ACK
- Off-Channel CAC support to enable seamless channel change to DFS channels
- WEP 64/128, WPA, WPA2, WPA3 (including 192-bit Enterprise mode), AES, TKIP
- Smart Antenna Steering (SAS) - Antenna Diversity on Tx/Rx with per packet/client control

Renesas Confidential
3521445641@qq.com
February 26, 2026

 © 2024 Renesas Electronics

- Per Packet Dynamic Tx Power Control
- QoS-WMM, WMM-PS, WMM-ACM
- Support IEEE 802.11.d, h, e, i, k, r, v, w standards
- Multiple BSSID Support
- Dynamic Frequency Selection (DFS) in required bands and regulations

2.3 Interfaces

- PCI Express 3.0 Dual Lane
- FEM controls / GPIOs
- Smart Antenna System controls
- 3-4 Wire Coexistence Interface
- I2C EEPROM

2.4 Package

- BGA 11x11 package 248 balls 0.65mm pitch package

Renesas Confidential
3521445647 @ qq.com
February 26, 2026

 © 2024 Renesas Electronics

3 Pin Description and PCB Guidelines

3.1 Signals Functional Diagram

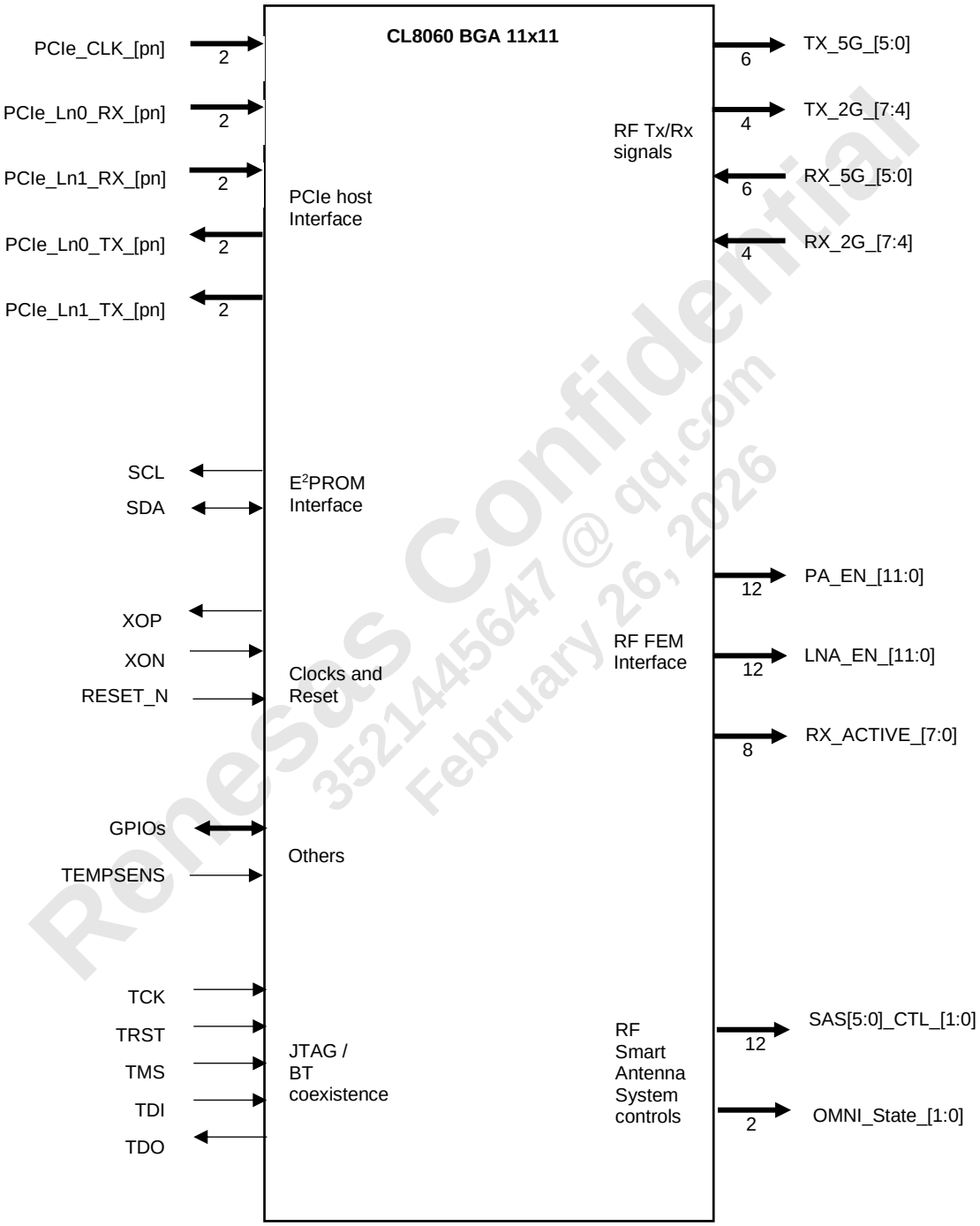

Renesas Confidential 3521445647 @ qq.com February 26, 2026

Figure 2: CL8060 Pinout Diagram

© 2024 Renesas Electronics

3.2 Ball Layout (Top View)

1	2	3	4	5	6	7	8	9	10	11	12	13	14	15	16	
TEST	BB_GND	SAS0_CTL_0	SAS1_CTL_1	PA_EN_0	PA_EN_1	BB_GND	PA_EN_2	PA_EN_8	PA_EN_3	PA_EN_9	TEMP	CAP	RF_GND	RF_GND	RF_GND	A
BB_GND	SDA	SCL	SAS0_CTL_1	SAS2_CTL_0	LNA_EN_0	LNA_EN_1	LNA_EN_2	LNA_EN_8	LNA_EN_3	LNA_EN_9	RF_REXT	RF_GND	RF_GND	RX_5G_0	TX_5G_0	B
PCIe_CLK_n	BB_GND	OMNI_STATE_0	SAS1_CTL_0	SAS2_CTL_1	SAS3_CTL_0	SAS3_CTL_1	RX_ACTIVE0	RX_ACTIVE1	RX_ACTIVE2	RX_ACTIVE3	TOP_IOVDD18	AFE_ESDGND_UP	RF_GND	RX_5G_1	TX_5G_1	C
PCIe_CLK_p	BB_GND	TOP_IOVDD18	BB_GND	BB_GND	BB_GND	TOP_IOVDD18	AFE_GND	AVDD_CLK09	AVDD_LDO09	AFE_GND	RF_CH0_VDD18	RF_GND	RF_GND	RX_5G_2	TX_5G_2	D
BB_GND	BB_GND	BB_GND	Dig_VDD09	BB_GND	Dig_VDD09	BB_GND	AFE_GND	AVDDA_DAC18	AVDD_ADC_IO18	AVDDA_LDO18	RF_CH1_VDD18	RF_GND	RF_GND	RX_5G_3	TX_5G_3	E
PCIe_Ln0_TX_n	PCIe_VDD18	Dig_VDD09	BB_GND	Dig_VDD09	Dig_VDD09	Dig_VDD09	AFE_GND	AVDDD_DAC18	AFE_VBIAS	AFE_GND	RF_CH2_VDD18	RF_GND	RF_GND	RF_GND	RF_GND	F
PCIe_Ln0_TX_p	PCIe_VDD18	BB_GND	PCIe_VDD_Dig	BB_GND	BB_GND	BB_GND	AFE_GND	AFE_GND	0	AVDD_ADC18	RF_CH3_VDD18	RF_GND	RF_GND	RF_GND	RF_GND	G
PCIe_Ln0_RX_n	PCIe_VDD09	0	0	Dig_VDD09	BB_GND	Dig_VDD09	AFE_GND	AFE_GND	0	AFE_GND	RF_GND	RF_GND	RF_GND	RX_5G_4	TX_5G_4	H
PCIe_Ln0_RX_p	BB_GND	0	0	Dig_VDD09	BB_GND	Dig_VDD09	AFE_GND	AFE_GND	0	AFE_GND	SX0_VDD18	RF_GND	RF_GND	TX_2G_4	RX_2G_4	J
PCIe_Ln1_RX_p	BB_GND	BB_GND	BB_GND	BB_GND	BB_GND	BB_GND	AFE_GND	AVDDD_DAC18	0	AFE_GND	RF_CH5_VDD18	RF_GND	RF_GND	RX_5G_5	TX_5G_5	K
PCIe_Ln1_RX_n	BB_GND	Dig_VDD09	Dig_VDD09	Dig_VDD09	Dig_VDD09	Dig_VDD09	AFE_GND	AVDDA_DAC18	AFE_GND	AVDD_ADC18	RF_CH6_VDD18	RF_GND	RF_GND	TX_2G_5	RX_2G_5	L
PCIe_Ln1_TX_p	PCIe_VDD09	BB_GND	Dig_VDD09	BB_GND	Dig_VDD09	BB_GND	AVDDA_PLLLDO18	AVDD_PLLLDO	AFE_VBIAS	CMLOUT	RF_CH7_VDD18	RF_GND	RF_GND	RF_GND	RF_GND	M
PCIe_Ln1_TX_n	BB_GND	BOT_IOVDD18	BB_GND	BB_GND	BB_GND	BOT_IOVDD18	AFE_GND	AVDD_LCPLL09	AVDD_SYSPLL09	AVDD_SYSPLL18	RF_GND	AFE_ESDGND_DN	RF_GND	TX_2G_6	RX_2G_6	N
PCIe_Rext	BB_GND	OMNI_State_1	GPIO1	SAS5_CTL_0	SAS4_CTL_1	SAS4_CTL_0	RX_ACTIVE7	RX_ACTIVE6	RX_ACTIVE5	RX_ACTIVE4	BOT_IOVDD18	TEM_TESTOUT	SX1_VDD18	RF_GND	RF_GND	P
BB_GND	TDI	TDO	TCK	SAS5_CTL_1	LNA_EN_7	LNA_EN_6	LNA_EN_5	LNA_EN_11	LNA_EN_4	LNA_EN_10	I_CLKSEL	RF_GND	RF_GND	TX_2G_7	RX_2G_7	R
RESET_N	BB_GND	TMS	TRST_N	PA_EN_7	PA_EN_6	BB_GND	PA_EN_5	PA_ENABLE_11	PA_EN_4	PA_EN_10	XON	XOP	RF_GND	RF_GND	RF_GND	T

Renesas Confidential
3321145647 @ qq.com
February 26, 2026

Color index:

GND	1.8V Supply	0.9V Supply	PCIe lanes	RF 5G signals	RF 2.5G signals	Digital Signals	Analog Signals	Xtal / Ref-clk	Passives	NC (Not Connected)

© 2024 Renesas Electronics

3.3 Ball Description

Table 1: Ball Description

BALL	BALL_NAME	Description	Type	In/Out	Default state (*)
		PCIe signals			
C1	PCIe_CLK_n	External reference clock (100MHz) from PCIe RC	Ref-clock	In	
D1	PCIe_CLK_p	External reference clock (100MHz) from PCIe RC	Ref-clock	In	
H1	PCIe_Ln0_RX_n	PCIe lane0 RX	HCSL	In	
J1	PCIe_Ln0_RX_p	PCIe lane0 RX	HCSL	In	
F1	PCIe_Ln0_TX_n	PCIe lane0 TX	HCSL	Out	
G1	PCIe_Ln0_TX_p	PCIe lane0 TX	HCSL	Out	
L1	PCIe_Ln1_RX_n	PCIe lane1 RX	HCSL	In	
K1	PCIe_Ln1_RX_p	PCIe lane1 RX	HCSL	In	
N1	PCIe_Ln1_TX_n	PCIe lane1 TX	HCSL	Out	
M1	PCIe_Ln1_TX_p	PCIe lane1 TX	HCSL	Out	
P1	PCIe_Rext	PCIe reference resistor (200 ohm)	Ref-res		
		Clocks and reset			
T1	RESET_N	RESET (active low)	Digital	In	
R12	I_CLKSEL	Selects XTAL frequency: 60MHz – connect to GND (pull-down)	Digital	In	Per XTAL freq
T12	XON	60 MHz XTAL	Ref-clock	IO	
T13	XOP	60 MHz XTAL	Ref-clock	IO	
		FEM controls			
B6	LNA_EN_0	LNA_ENABLE control to FEM / GPIO	Digital	IO	PD
B7	LNA_EN_1	LNA_ENABLE control to FEM / GPIO	Digital	IO	PD
B8	LNA_EN_2	LNA_ENABLE control to FEM / GPIO	Digital	IO	PD
B10	LNA_EN_3	LNA_ENABLE control to FEM / GPIO	Digital	IO	PD
R10	LNA_EN_4	LNA_ENABLE control to FEM / GPIO	Digital	IO	PD
R8	LNA_EN_5	LNA_ENABLE control to FEM / GPIO	Digital	IO	PD
R7	LNA_EN_6	LNA_ENABLE control to FEM / GPIO	Digital	IO	PD
R6	LNA_EN_7	LNA_ENABLE control to FEM / GPIO	Digital	IO	PD
B9	LNA_EN_8	LNA_ENABLE control to FEM / GPIO	Digital	IO	PD
B11	LNA_EN_9	LNA_ENABLE control to FEM / GPIO	Digital	IO	PD
R11	LNA_EN_10	LNA_ENABLE control to FEM / GPIO	Digital	IO	PD
R9	LNA_EN_11	LNA_ENABLE control to FEM / GPIO	Digital	IO	PD
A5	PA_EN_0	PA_ENABLE control to FEM / GPIO	Digital	IO	PD
A6	PA_EN_1	PA_ENABLE control to FEM / GPIO	Digital	IO	PD
A8	PA_EN_2	PA_ENABLE control to FEM / GPIO	Digital	IO	PD
A10	PA_EN_3	PA_ENABLE control to FEM / GPIO	Digital	IO	PD
T10	PA_EN_4	PA_ENABLE control to FEM / GPIO	Digital	IO	PD
T8	PA_EN_5	PA_ENABLE control to FEM / GPIO	Digital	IO	PD

Renesas Confidential
3782156@qq.com
February 16, 2026

 © 2024 Renesas Electronics

T6	PA_EN_6	PA_ENABLE control to FEM / GPIO	Digital	IO	PD
T5	PA_EN_7	PA_ENABLE control to FEM / GPIO	Digital	IO	PD
A9	PA_EN_8	PA_ENABLE control to FEM / GPIO	Digital	IO	PD
A11	PA_EN_9	PA_ENABLE control to FEM / GPIO	Digital	IO	PD
T11	PA_EN_10	PA_ENABLE control to FEM / GPIO	Digital	IO	PD
T9	PA_EN_11	PA_ENABLE control to FEM / GPIO	Digital	IO	PD
C8	RX_ACTIVE0	RX_ACTIVE control to FEM / GPIO	Digital	IO	PU
C9	RX_ACTIVE1	RX_ACTIVE control to FEM / GPIO	Digital	IO	PU
C10	RX_ACTIVE2	RX_ACTIVE control to FEM / GPIO	Digital	IO	PU
C11	RX_ACTIVE3	RX_ACTIVE control to FEM / GPIO	Digital	IO	PU
P11	RX_ACTIVE4	RX_ACTIVE control to FEM / GPIO	Digital	IO	PU
P10	RX_ACTIVE5	RX_ACTIVE control to FEM / GPIO	Digital	IO	PU
P9	RX_ACTIVE6	RX_ACTIVE control to FEM / GPIO	Digital	IO	PU
P8	RX_ACTIVE7	RX_ACTIVE control to FEM / GPIO	Digital	IO	PU
		Smart Antenna System (SAS) controls			
C3	OMNI_State_0	Antennas of tranciever0 in omni state / GPIO	Digital	IO	PU
P3	OMNI_State_1	Antennas of tranciever1 in omni state / GPIO	Digital	IO	PU
A3	SAS0_CTL_0	SAS control for antenna 0 / GPIO	Digital	IO	PU
B4	SAS0_CTL_1	SAS control for antenna 0 / GPIO	Digital	IO	PD
C4	SAS1_CTL_0	SAS control for antenna 1 / GPIO	Digital	IO	PU
A4	SAS1_CTL_1	SAS control for antenna 1 / GPIO	Digital	IO	PD
B5	SAS2_CTL_0	SAS control for antenna 2 / GPIO	Digital	IO	PU
C5	SAS2_CTL_1	SAS control for antenna 2 / GPIO	Digital	IO	PD
C6	SAS3_CTL_0	SAS control for antenna 3 / GPIO	Digital	IO	PU
C7	SAS3_CTL_1	SAS control for antenna 3/ GPIO	Digital	IO	PD
P7	SAS4_CTL_0	SAS control for antenna 4 / GPIO	Digital	IO	PU
P6	SAS4_CTL_1	SAS control for antenna 4 / GPIO	Digital	IO	PD
P5	SAS5_CTL_0	SAS control for antenna 5 / GPIO	Digital	IO	PU
R5	SAS5_CTL_1	SAS control for antenna 5 / GPIO	Digital	IO	PD
		RF signals			
J16	RX_2G_4	RF RX 2.5G chain 4	RF	In	
L16	RX_2G_5	RF RX 2.5G chain 5	RF	In	
N16	RX_2G_6	RF RX 2.5G chain 6	RF	In	
R16	RX_2G_7	RF RX 2.5G chain 7	RF	In	
J15	TX_2G_4	RF TX 2.5G chain 4	RF	Out	
L15	TX_2G_5	RF TX 2.5G chain 5	RF	Out	
N15	TX_2G_6	RF TX 2.5G chain 6	RF	Out	
R15	TX_2G_7	RF TX 2.5G chain 7	RF	Out	
B15	RX_5G_0	RF RX 5G chain 0	RF	In	
C15	RX_5G_1	RF RX 5G chain 1	RF	In	
D15	RX_5G_2	RF RX 5G chain 2	RF	In	

Renesas Confidential
3377aeat@163.com
February 26, 2026

© 2024 Renesas Electronics

E15	RX_5G_3	RF RX 5G chain 3	RF	In	
H15	RX_5G_4	RF RX 5G chain 4	RF	In	
K15	RX_5G_5	RF RX 5G chain 5	RF	In	
B16	TX_5G_0	RF TX 5G chain 0	RF	Out	
C16	TX_5G_1	RF TX 5G chain 1	RF	Out	
D16	TX_5G_2	RF TX 5G chain 2	RF	Out	
E16	TX_5G_3	RF TX 5G chain 3	RF	Out	
H16	TX_5G_4	RF TX 5G chain 4	RF	Out	
K16	TX_5G_5	RF TX 5G chain 5	RF	Out	
B12	RF_REXT	RF external reference resistor	Ref-res		
		I2C EEPROM			
B3	SCL	SCL (open drain) / GPIO	Digital	IO	OD
B2	SDA	SDA (open drain) / GPIO	Digital	IO	OD
		JTAG / Bluetooth coexistence / SAS antenna			
R4	TCK	TCK (open drain) / GPIO	Digital	IO	OD
R2	TDI	TDI (open drain) / BTC/ GPIO	Digital	IO	OD
R3	TDO	TDI (open drain) / BTC/ GPIO	Digital	IO	OD
T3	TMS	TDI (open drain) / BTC/ GPIO	Digital	IO	OD
T4	TRST_N	TDI (open drain) / BTC/ GPIO	Digital	IO	OD
		Others			
A1	TEST	TEST pin – connect to GND	Digital	In	
P4	GPIO1	GPIO	Digital	IO	PU
A12	Temp	External temperature sensor	Analog	In	
A13	CAP	Decap			
P13	TEM_TESTOUT	TEST pin for internal temp sense – leave open	Analog	OUT	
M11	CMLOUT	Decap	Decap		
M9	AVDD_PLLLDO	Decap	Decap		

(*) Default state: Digital IOs state after reset

PD: Pull-Down, PU: Pull-up, OD: Open-Drain

Renesas Confidential
3523445647@qq.com
February 26, 2026

© 2024 Renesas Electronics

Table 2: Ball Supplies Description

Supplies		
BALL	**BALL_NAME**	**Description**
F2 G2	PCIe_VDD18	1.8V PCIE VDD supply
N3 N7 P12	BOT_IOVDD18	1.8V supply of Digital IO (bottom side)
C12 D3 D7	TOP_IOVDD18	1.8V supply of Digital IO (top side)
J12	SX0_VDD18	1.8V supply for RF synthesizer 0
P14	SX1_VDD18	1.8V supply for RF synthesizer 1
D12	RF_CH0_VDD18	1.8V RF supply
E12	RF_CH1_VDD18	1.8V RF supply
F12	RF_CH2_VDD18	1.8V RF supply
G12	RF_CH3_VDD18	1.8V RF supply
K12	RF_CH5_VDD18	1.8V RF supply
L12	RF_CH6_VDD18	1.8V RF supply
M12	RF_CH7_VDD18	1.8V RF supply
E10	AVDD_ADC_IO18	1.8V supply for AFE ADC IO
G11 L11	AVDD_ADC18	1.8V supply for AFE ADC
N11	AVDD_SYSPLL18	1.8V supply for AFE system PLL
E9 L9	AVDDA_DAC18	1.8V supply for AFE DAC analog
F9 K9	AVDDD_DAC18	1.8V supply for AFE DAC digital
M8	AVDDA_PLLLDO18	1.8V supply for AFE PLL LDO
E11	AVDDA_LDO18	1.8V supply input of AFE LDO
D10	AVDD_LDO09	0.9V supply output of AFE LDO
D9	AVDD_CLK09	0.9V supply for AFE clock (connect to AVDD_LDO09)
N9	AVDD_LCPLL09	0.9V supply for AFE LCPLL (connect to AVDD_LDO09)
N10	AVDD_SYSPLL09	0.9V supply for AFE sys-PLL (connect to AVDD_LDO09)
E4 E6 F3 F5 F6 F7 H5 H7 J5 J7 L3 L4 L5 L6 L7 M4 M6	Dig_VDD09	0.9V supply for digital logic
G4	PCIe_VDD_Dig	0.9V supply for PCIE digital logic
H2 M2	PCIe_VDD09	0.9V supply for PCIE lanes
N13	AFE_ESDGND_DN	Common GND
C13	AFE_ESDGND_UP	
D8 D11 E8 F8 F11 G8 G9 H8 H9 H11 J8 J9 J11 K8 K11 L8 L10 N8	AFE_GND	
F10 M10	AFE_VBIAS	
A2 A7 B1 C2 D2 D4 D5 D6 E1 E2 E3 E5 E7 F4 G3 G5 G6 G7 H6 J2 J6 K2 K3 K4	BB_GND	

Renesas Confidential
3364564@qq.com
February 20, 2026

 © 2024 Renesas Electronics

K5 K6 K7 L2 M3 M5 M7 N2 N4 N5 N6 P2 R1 T2 T7		
A14 A15 A16 B13 B14 C14 D13 D14 E13 E14 F13 F14 F15 F16 G13 G14 G15 G16 H12 H13 H14 J13 J14 K13 K14 L13 L14 M13 M14 M15 M16 N12 N14 P15 P16 R13 R14 T14 T15 T16	RF_GND	

3.4 Power Up and Down Sequence

Sequential power-up of 1.8V and 0.9V must be provided for proper operation. Supply voltage of 0.9V must be ramped up first, and supply voltage of 1.8V must be started ramping up after 0.9V supply is completely settled.

During power-down (turning-off supply voltage), supply voltage of 0.9V must start ramping down after supply voltage of 1.8V is completely discharge.

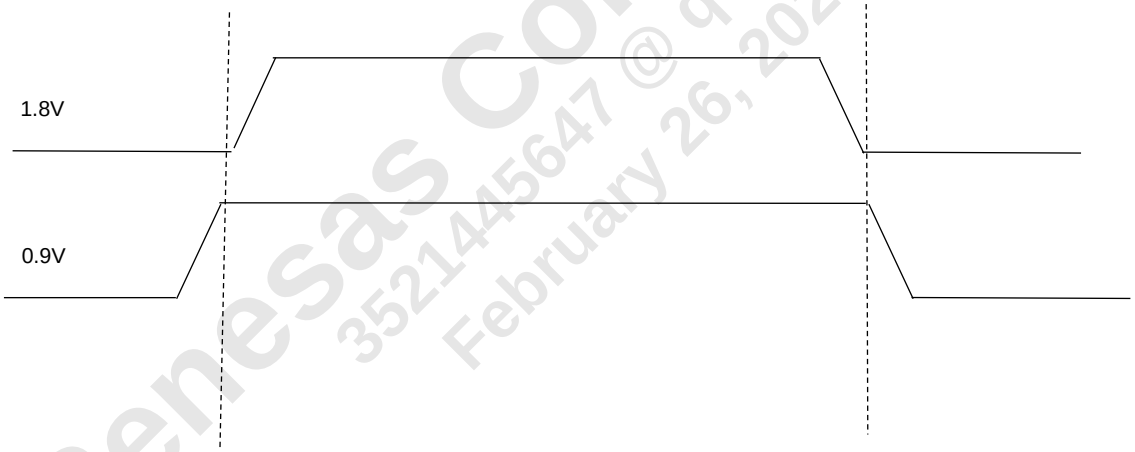

Renesas Confidential
3521445647 @ qq.com
February 26, 2026

3.5 Guidelines to I²C signals: SCL, SDA

SCL, SDA pins should always be pulled-up with external resistors (1KΩ-3.3KΩ) to TOP_IOVDD

© 2024 Renesas Electronics

4 Electrical Characteristics

4.1 Absolute Maximum Ratings

Stresses beyond those listed under Absolute Maximum Ratings may cause permanent damage to the device. These are stress ratings only, so functional operation of the device at these or any other conditions beyond those indicated in the operational sections of the specification are not implied. Exposure to Absolute Maximum Rating conditions for extended periods may affect device reliability.

Table 3: Absolute Maximum Ratings

Symbol	Parameters	Maximum Rating	Unit
***VDD18**	1.8V Supply Voltage	-0.3 to 2.1	V
***VDD09**	0.9V Supply Voltage	-0.3 to 1.2	V
T_{STG}	Storage Temperature	-40 to +125	°C
VESD	ESD protection (HBM) ESD protection (CDM)	2000 250	V V

4.2 Recommended Operating Ranges

Table 4: Recommended Operating Ranges

Symbol	Ratings	Min	Typical	Max	Unit
***VDD18**	1.8V Supply Voltage	1.71	1.80	1.89	V
***VDD09**	0.9V Supply Voltage	0.86	0.90	0.94	V
Tcase	Case temperature	-40	-	110	°C

4.3 Thermal Characteristics

Table 5: Thermal Characteristics

Symbol	Description	Performance	
		Typical	Unit
Test condition	According to JEDEC JESD51-12, board type JESD51-9 2S2P (101.5 mm x 114.5 mm)		
Θ_{JC}	Junction to case thermal resistance	0.27	°C/W
Θ_{JB}	Junction to board thermal resistance	9.00	°C/W

Renesas Confidential
8521445647 @ qq.com
February 26, 2026

© 2024 Renesas Electronics

4.4 DC Characteristics for Digital Pins

Table 6: DC Characteristics for Digital Pins

Symbol	Parameter	Conditions	Min	Max	Unit
V_{IL}	Input Low Voltage	Guaranteed logic LOW	GND	0.3 x *IOVDD18	V
V_{IH}	Input High Voltage	Guaranteed logic HIGH	0.7 x *IOVDD18	*IOVDD18	V
V_H	Input Hysteresis for Schmitt Trigger Operation		0.1 x *IOVDD18		V
V_{OL}	Output Low Voltage (1)	I_{OL} = 2mA, 4mA, 8mA and 12mA	GND	0.2 x *IOVDD18	V
V_{OH}	Output High Voltage (1)	I_{OH} = 2mA, 4mA, 8mA and 12mA	0.8 x *IOVDD18	*IOVDD18	V
I_{RPU}	Input Pull-Up current (2)	PU state	-35	-185	uA
R_{RPU}	Input Pull-Up resistance (2)	PU state	10	50	KΩ
I_{RPD}	Input Pull-Down current (2)	PD state	25	130	uA
R_{RPD}	Input Pull-Down resistance (2)	PD state	15	60	KΩ

(1) All digital iOs can be configured as 2,4,8 or 12 mA drive strength,
Default value for all digital iOs is 4 mA
(2) All digital iOs can be in PU, PD, Retention or HiZ when in input state

Renesas Confidential
3524445647 @ qq.com
February 26, 2026

4.5 Current Consumption

Table 7: Current Consumption

Measured with Tcase=110C

Description	1.8V	0.9V	Unit
Max current Tx (both Transceivers are transmitting in max throughput)	1.3	2.9	A
Max current Rx (both Transceivers are receiving in max throughput)	1.1	2.8	A

© 2024 Renesas Electronics

4.6 Xtal Specifications

Table 8: Xtal Specifications

Crystal Parameters	Min	Typical	Max	Unit
Reference OSC Frequency		60		MHz
Xtal Accuracy (Tolerance, Temperature and Aging)	-20		+20	ppm
Cload		9		pF

4.7 External Temperature Sensor Specifications

Table 9: External Temperature Sensor Specifications

Crystal Parameters	Min	Typical	Max	Unit
V_{TEMP}	0.1		1.4	V

Renesas Confidential
3521445647 @ qq.com
February 26, 2026

© 2024 Renesas Electronics

4.8 PCIe Reference Clock Specification

Table 10: PCIe Reference Clock Specification

Symbol	Parameter	Min	Typical	Max	Unit
F_R	Reference Clock Frequency	99.97	100	100.03	MHz
DC	Duty Cycle	40	-	60	%
T_R, T_F	Rise and fall time	-	-	1.5	ns
RJ	RJ spec for Gen1	-	-	4.8	ps_{rms}
	RJ spec for Gen2	-	-	2	ps_{rms}
	RJ spec for Gen3	-	-	1	ps_{rms}
$Z_{C, DC}$	Output DC impedance of clock source	40	-	60	Ω
V_{IH}	Differential input high voltage	+150	-	-	mV
V_{IL}	Differential input low voltage	-	-	-150	mV
V_{MAX}	Absolute maximum input voltage	-	-	+1.15	V
V_{MIN}	Absolute minimum input voltage	-	-	-0.3	V
V_{CROSS}	Absolute crossing point voltage	+250	-	+550	mV

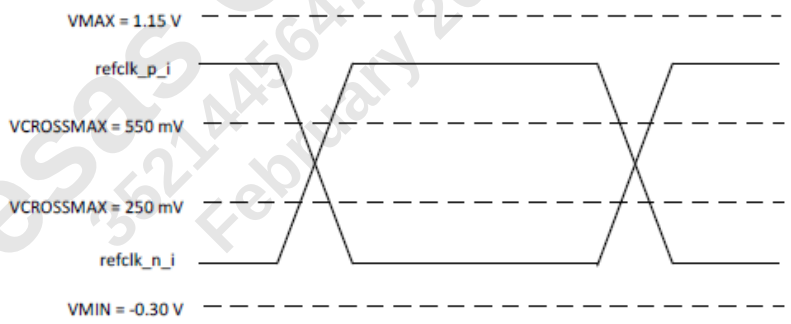

Renesas Confidential
35214456647 @ qq.com
February 26, 2026

© 2024 Renesas Electronics

5 RF Specifications

5.1 2.4GHz band RF Receiver Specifications

The specification in table below is measured at the antenna port, which includes the front-end loss, values are for SISO (per each single chain):

Table 11: 2.4GHz band RF Receiver Specifications

Parameter	Description	Performance			
		MIN	TYP	MAX	Unit
Frequency range		2412	-	2472	MHz
RX sensitivity	CCK, 1Mbps	-	-94	-	dBm
	CCK, 11Mbps	-	-93	-	dBm
	6 Mbps OFDM	-	-93	-	dBm
	9 Mbps OFDM	-	-93	-	dBm
	12 Mbps OFDM	-	-92	-	dBm
	18 Mbps OFDM	-	-90	-	dBm
	24 Mbps OFDM	-	-87	-	dBm
	36 Mbps OFDM	-	-83	-	dBm
	48 Mbps OFDM	-	-79	-	dBm
	54 Mbps OFDM	-	-78	-	dBm
RX Sensitivity BW=20MHz HT	MCS 0	-	-93	-	dBm
	MCS 1	-	-92	-	dBm
	MCS 2	-	-90	-	dBm
	MCS 3	-	-87	-	dBm
	MCS 4	-	-83	-	dBm
	MCS 5	-	-79	-	dBm
	MCS 6	-	-78	-	dBm
	MCS 7	-	-77	-	dBm
RX Sensitivity BW=20MHz VHT	MCS 0	-	-93	-	dBm
	MCS 1	-	-92	-	dBm
	MCS 2	-	-90	-	dBm
	MCS 3	-	-87	-	dBm
	MCS 4	-	-83	-	dBm
	MCS 5	-	-79	-	dBm
	MCS 6	-	-78	-	dBm
	MCS 7	-	-77	-	dBm
	MCS 8	-	-72	-	dBm
	MCS 9	-	-70	-	dBm
RX Sensitivity BW=20MHz HE	MCS 0	-	-93	-	dBm
	MCS 1	-	-92	-	dBm
	MCS 2	-	-90	-	dBm
	MCS 3	-	-87	-	dBm
	MCS 4	-	-83	-	dBm
	MCS 5	-	-79	-	dBm
	MCS 6	-	-78	-	dBm
	MCS 7	-	-77	-	dBm
	MCS 8	-	-72	-	dBm

Renesas Confidential
6521445647 @ qq.com
February 26, 2026

© 2024 Renesas Electronics

	MCS 9	-	-70	-	dBm
	MCS 10	-	-67	-	dBm
	MCS 11	-	-65	-	dBm
RX Sensitivity BW=40MHz HT	MCS 0	-	-90	-	dBm
	MCS 1	-	-89	-	dBm
	MCS 2	-	-87	-	dBm
	MCS 3	-	-84	-	dBm
	MCS 4	-	-80	-	dBm
	MCS 5	-	-76	-	dBm
	MCS 6	-	-75	-	dBm
	MCS 7	-	-74	-	dBm
RX Sensitivity BW=40MHz VHT	MCS 0	-	-90	-	dBm
	MCS 1	-	-89	-	dBm
	MCS 2	-	-87	-	dBm
	MCS 3	-	-84	-	dBm
	MCS 4	-	-80	-	dBm
	MCS 5	-	-76	-	dBm
	MCS 6	-	-75	-	dBm
	MCS 7	-	-74	-	dBm
	MCS 8	-	-69	-	dBm
	MCS 9	-	-67	-	dBm
RX Sensitivity BW=40MHz HE	MCS 0	-	-90	-	dBm
	MCS 1	-	-89	-	dBm
	MCS 2	-	-87	-	dBm
	MCS 3	-	-84	-	dBm
	MCS 4	-	-80	-	dBm
	MCS 5	-	-76	-	dBm
	MCS 6	-	-75	-	dBm
	MCS 7	-	-74	-	dBm
	MCS 8	-	-69	-	dBm
	MCS 9	-	-67	-	dBm
	MCS 10	-	-64	-	dBm
	MCS 11	-	-62	-	dBm
Maximum Receive Level	6 Mbps OFDM	-	-15	-	dBm
	54 Mbps OFDM	-	-15	-	dBm
	MCS0	-	-15	-	dBm
	MCS7	-	-15	-	dBm
	MCS11	-	-15	-	dBm

Renesas Confidential
15214456647 @ qq.com
February 26, 2026

© 2024 Renesas Electronics

5.2 2.4GHz band RF Transmitter Specifications

The specification in table below is measured at the antenna port, which includes the front-end loss, values are for SISO (per each single chain):

Table 12: 2.4GHz band RF Transmitter Specifications

Parameter	Description	Performance			
		MIN	TYP	MAX	Unit
Frequency range		2412	-	2472	MHz
Output power	1 Mbps CCK	-	0	-	dBm
	6 Mbps OFDM	-	0	-	dBm
	54 Mbps OFDM	-	0	-	dBm
	HT20/HT40, MCS 0	-	0	-	dBm
	HT20/HT40, MCS 7	-	-2	-	dBm
	VHT20/VHT40, MCS 9	-	-3	-	dBm
	HE20/HE40, MCS 11	-	-5	-	dBm
Carrier suppression		-	-	-40	dBc
Harmonic Output Power	2nd Harmonic	-	-95	-	dBm/MHz
	3rd Harmonic	-	-95	-	dBm/MHz

5.3 5GHz band RF Receiver Specifications

The specification in table below is measured at the antenna port, which includes the front-end loss, values are for SISO (per each single chain):

Table 13: 5GHz band RF Receiver Specifications

Parameter	Description	Performance			
		MIN	TYP	MAX	Unit
Frequency range		5180	-	5975	MHz
RX sensitivity	6 Mbps OFDM	-	-93	-	dBm
	9 Mbps OFDM	-	-93	-	dBm
	12 Mbps OFDM	-	-92	-	dBm
	18 Mbps OFDM	-	-90	-	dBm
	24 Mbps OFDM	-	-87	-	dBm
	36 Mbps OFDM	-	-83	-	dBm
	48 Mbps OFDM	-	-79	-	dBm
	54 Mbps OFDM	-	-78	-	dBm
RX Sensitivity BW=20MHz HT	MCS 0	-	-93	-	dBm
	MCS 1	-	-92	-	dBm
	MCS 2	-	-90	-	dBm
	MCS 3	-	-87	-	dBm
	MCS 4	-	-83	-	dBm
	MCS 5	-	-79	-	dBm
	MCS 6	-	-78	-	dBm
	MCS 7	-	-77	-	dBm
RX Sensitivity BW=20MHz VHT	MCS 0	-	-93	-	dBm
	MCS 1	-	-92	-	dBm
	MCS 2	-	-90	-	dBm
	MCS 3	-	-87	-	dBm

Renesas Confidential
2221445647@qq.com
February 26, 2026

© 2024 Renesas Electronics

	MCS 4	-	-83	-	dBm
	MCS 5	-	-79	-	dBm
	MCS 6	-	-78	-	dBm
	MCS 7	-	-77	-	dBm
	MCS 8	-	-72	-	dBm
	MCS 9	-	-70	-	dBm
RX Sensitivity BW=20MHz HE	MCS 0	-	-93	-	dBm
	MCS 1	-	-92	-	dBm
	MCS 2	-	-90	-	dBm
	MCS 3	-	-87	-	dBm
	MCS 4	-	-83	-	dBm
	MCS 5	-	-79	-	dBm
	MCS 6	-	-78	-	dBm
	MCS 7	-	-77	-	dBm
	MCS 8	-	-72	-	dBm
	MCS 9	-	-70	-	dBm
	MCS 10	-	-67	-	dBm
	MCS 11	-	-65	-	dBm
RX Sensitivity BW=40MHz HT	MCS 0	-	-90	-	dBm
	MCS 1	-	-89	-	dBm
	MCS 2	-	-87	-	dBm
	MCS 3	-	-84	-	dBm
	MCS 4	-	-80	-	dBm
	MCS 5	-	-76	-	dBm
	MCS 6	-	-75	-	dBm
	MCS 7	-	-74	-	dBm
RX Sensitivity BW=40MHz VHT	MCS 0	-	-90	-	dBm
	MCS 1	-	-89	-	dBm
	MCS 2	-	-87	-	dBm
	MCS 3	-	-84	-	dBm
	MCS 4	-	-80	-	dBm
	MCS 5	-	-76	-	dBm
	MCS 6	-	-75	-	dBm
	MCS 7	-	-74	-	dBm
	MCS 8	-	-69	-	dBm
	MCS 9	-	-67	-	dBm
RX Sensitivity BW=40MHz HE	MCS 0	-	-90	-	dBm
	MCS 1	-	-89	-	dBm
	MCS 2	-	-87	-	dBm
	MCS 3	-	-84	-	dBm
	MCS 4	-	-80	-	dBm
	MCS 5	-	-76	-	dBm
	MCS 6	-	-75	-	dBm
	MCS 7	-	-74	-	dBm
	MCS 8	-	-69	-	dBm
	MCS 9	-	-67	-	dBm

Renesas Confidential
15214456647 @ qq.com
February 26, 2026

© 2024 Renesas Electronics

	MCS 10	-	-64	-	dBm
	MCS 11	-	-62	-	dBm
RX Sensitivity BW=80MHz VHT	MCS 0	-	-87	-	dBm
	MCS 1	-	-86	-	dBm
	MCS 2	-	-84	-	dBm
	MCS 3	-	-81	-	dBm
	MCS 4	-	-77	-	dBm
	MCS 5	-	-73	-	dBm
	MCS 6	-	-72	-	dBm
	MCS 7	-	-71	-	dBm
	MCS 8	-	-66	-	dBm
	MCS 9	-	-64	-	dBm
RX Sensitivity BW=80MHz HE	MCS 0	-	-87	-	dBm
	MCS 1	-	-86	-	dBm
	MCS 2	-	-84	-	dBm
	MCS 3	-	-81	-	dBm
	MCS 4	-	-77	-	dBm
	MCS 5	-	-73	-	dBm
	MCS 6	-	-72	-	dBm
	MCS 7	-	-71	-	dBm
	MCS 8	-	-66	-	dBm
	MCS 9	-	-64	-	dBm
	MCS 10	-	-61	-	dBm
	MCS 11	-	-59	-	dBm
RX Sensitivity BW=160MHz HE	MCS 0	-	-84	-	dBm
	MCS 1	-	-83	-	dBm
	MCS 2	-	-81	-	dBm
	MCS 3	-	-78	-	dBm
	MCS 4	-	-74	-	dBm
	MCS 5	-	-70	-	dBm
	MCS 6	-	-69	-	dBm
	MCS 7	-	-68	-	dBm
	MCS 8	-	-63	-	dBm
	MCS 9	-	-61	-	dBm
	MCS 10	-	-58	-	dBm
	MCS 11	-	-56	-	dBm
Maximum Receive Level	6 Mbps OFDM	-	-15	-	dBm
	54 Mbps OFDM	-	-15	-	dBm
	MCS0	-	-15	-	dBm
	MCS7	-	-15	-	dBm
	MCS9	-	-15	-	dBm
	MCS11	-	-15	-	dBm

Renesas Confidential
15214456647 @ qq.com
February 26, 2026

© 2024 Renesas Electronics

5.4 5GHz band RF Transmitter Specifications

The specification in table below is measured at the antenna port, which includes the front-end loss, values are for SISO (per each single chain):

Table 14: 5GHz band RF Transmitter Specifications

Parameter	Description	Performance			
		MIN	TYP	MAX	Unit
Frequency range		5180	-	5925	MHz
Output power	6 Mbps OFDM	-	0	-	dBm
	54 Mbps OFDM	-	0	-	dBm
	VHT20/VHT40/VHT80, MCS 0	-	0	-	dBm
	VHT20/VHT40/VHT80, MCS 7	-	-2	-	dBm
	VHT20/VHT40/VHT80, MCS 9	-	-3	-	dBm
	HE20/HE40/HE80/HE160, MCS 11	-	-5	-	dBm
Carrier suppression		-	-	-40	dBc
Harmonic Output Power	2nd Harmonic	-	-95	-	dBm/MHz
	3rd Harmonic	-	-95	-	dBm/MHz

Renesas Confidential
3521445647 @ qq.com
February 26, 2026

6 Package Information

6.1 Mechanical Drawing

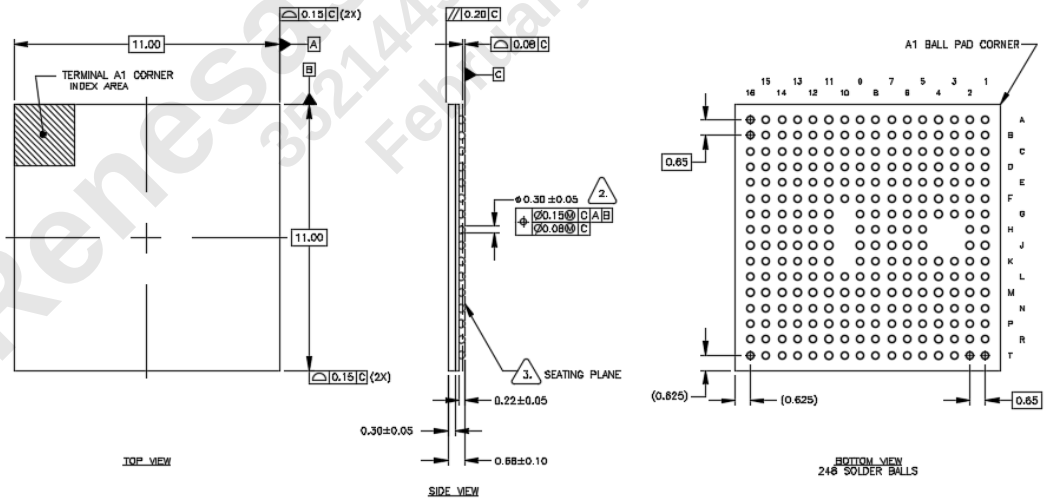

Figure 3: Mechanical Drawing

© 2024 Renesas Electronics

6.2 Package marking

NNNNNNNN	Lot Number Indication
YYWW	Date Code (year work + week)

Figure 4: CL8060 Package Outline Drawing

6.3 Moisture Sensitivity Level (MSL)

The MSL is an indicator for the maximum allowable time period (floor life time) in which a moisture sensitive plastic device, once removed from the dry bag, can be exposed to an environment with a maximum temperature of 30 °C and a maximum relative humidity of 60 % RH before the solder reflow process.

CL8000 BGA package is qualified for MSL 3. This implies Floor Lifetime of 168 hours.

6.4 Soldering Information

Refer to the IPC/JEDEC standard J-STD-020 for relevant soldering information. This document can be downloaded from http://www.jedec.org.

6.4.1 Recommended Condition for Reflow Soldering

The reflow profile depends on the solder paste being used and the recommendations from the paste manufacturer should be followed to determine the proper reflow profile.

the following reflect the recommended reflow specification:

Profile Feature	Condition
Preheat	
Temperature Min ($T_{pre\text{-}min}$)	170°C
Temperature Max ($T_{pre\text{-}max}$)	220°C
Time ($T_{pre\text{-}min}$ to $T_{pre\text{-}max}$)	70~100 sec
Time maintained above	
Temperature (T_{above})	221°C
Time maintained above (t_{above})	60~90 sec
Peak/Classification temperature (T_{peak})	255~260°C
Time maintained peak (t_{peak})	Max 10 sec
Ramp-down	
Ramp down rate (Peak temp to 100°C)	Max 1°C/sec

Renesas Confidential
3521445041 @ qq.com
February 20, 2026

© 2024 Renesas Electronics

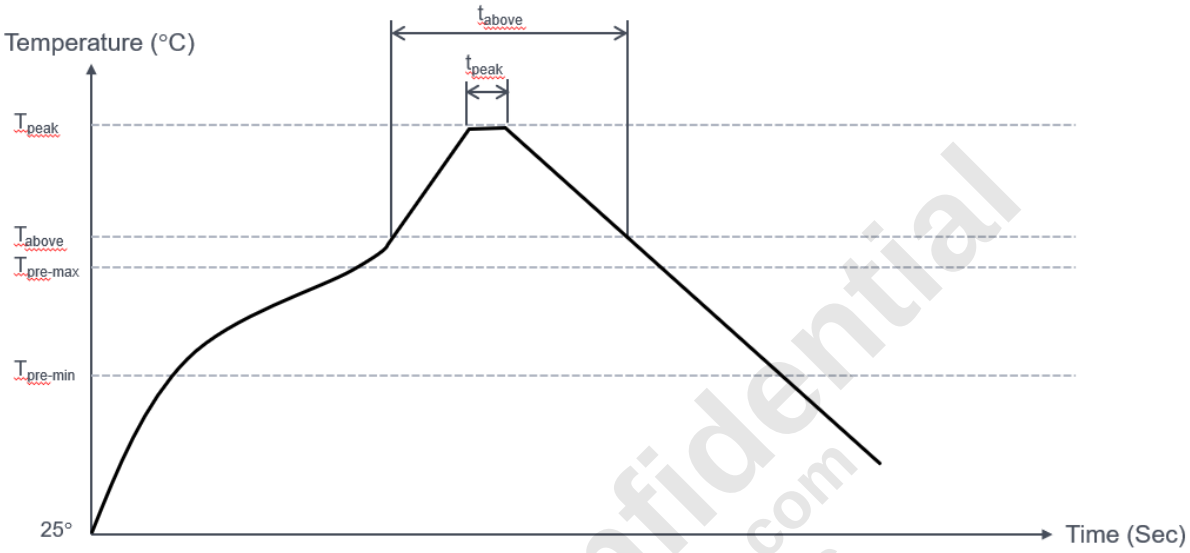

Figure 5: Reflow Soldering

Renesas Confidential
3521445647 @ qq.com
February 26, 2026

© 2024 Renesas Electronics

7 Ordering Information

Part Number	Package	Size (mm)	Shipment Form	Pack Quantity
CL8060	BGA	11x11	Tray	1760

Renesas Confidential
3521445647 @ qq.com
February 26, 2026

© 2024 Renesas Electronics

Revision History

Revision	Date	Details
0.3	July-2020	corrected pin numbers tagging
0.4	July-2020	RF Receiver Specification update
0.5	Nov-2020	Update power consumption
0.6	Feb-2021	Update RF Rx sensitivity typical values (Legacy and HE frame only)
0.7	Feb-2021	Edit ball layout and description
1.0	Apr-2021	Update RF Rx Sensitivity typical values (all)
1.1	Apr-2021	Corrected GPIO name
1.2	Jul-2021	Keep 60 MHz crystal only (ball description and xtal specification)
1.3	Oct-2021	Update thermal, mechanical and marking
2.0	Mar-2022	Added soldering and MSL information to package section
2.1	12-Apr-2022	Document rebranded to Renesas.
2.2	7-Jun-2022	Updated description
2.3	12-Jun-2022	Updated Reflow Profile Peak Temperature
2.4	5-Sep-2022	Updated Ball Layout and Descriptions and RF receive values
2.5	30-Jan-2023	Updated power consumption and clarify test condition, updated max Tcase recommendation
2.6	18-June-2024	Removed NDA Confidential markings

Renesas Confidential
352240 AM @ 01-Jan
February 26 2026

 © 2024 Renesas Electronics

Important Notice and Disclaimer

RENESAS ELECTRONICS CORPORATION AND ITS SUBSIDIARIES (“RENESAS”) PROVIDES TECHNICAL SPECIFICATIONS AND RELIABILITY DATA (INCLUDING DATASHEETS), DESIGN RESOURCES (INCLUDING REFERENCE DESIGNS), APPLICATION OR OTHER DESIGN ADVICE, WEB TOOLS, SAFETY INFORMATION, AND OTHER RESOURCES “AS IS” AND WITH ALL FAULTS, AND DISCLAIMS ALL WARRANTIES, EXPRESS OR IMPLIED, INCLUDING, WITHOUT LIMITATION, ANY IMPLIED WARRANTIES OF MERCHANTABILITY, FITNESS FOR A PARTICULAR PURPOSE, OR NON-INFRINGEMENT OF THIRD PARTY INTELLECTUAL PROPERTY RIGHTS.

These resources are intended for developers skilled in the art designing with Renesas products. You are solely responsible for (1) selecting the appropriate products for your application, (2) designing, validating, and testing your application, and (3) ensuring your application meets applicable standards, and any other safety, security, or other requirements. These resources are subject to change without notice. Renesas grants you permission to use these resources only for development of an application that uses Renesas products. Other reproduction or use of these resources is strictly prohibited. No license is granted to any other Renesas intellectual property or to any third party intellectual property. Renesas disclaims responsibility for, and you will fully indemnify Renesas and its representatives against, any claims, damages, costs, losses, or liabilities arising out of your use of these resources. Renesas' products are provided only subject to Renesas' Terms and Conditions of Sale or other applicable terms agreed to in writing. No use of any Renesas resources expands or otherwise alters any applicable warranties or warranty disclaimers for these products.

© 2024 Renesas Electronics Corporation. All rights reserved.

Renesas Confidential
3521445647 @ qq.com
February 26, 2026

(Rev.1.0 Mar 2020)

Corporate Headquarters

TOYOSU FORESIA, 3-2-24 Toyosu

Koto-ku, Tokyo 135-0061, Japan

www.renesas.com

Contact Information

For further information on a product, technology, the most up-to-date version of a document, or your nearest sales office, please visit:

https://www.renesas.com/contact/

Trademarks

Renesas and the Renesas logo are trademarks of Renesas Electronics Corporation. All trademarks and registered trademarks are the property of their respective owners.