Front view

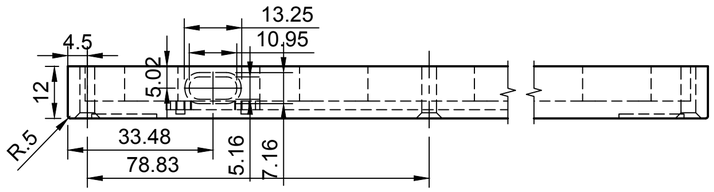

Side view

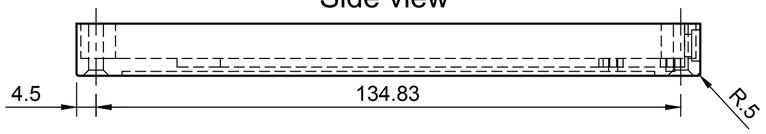

Top view

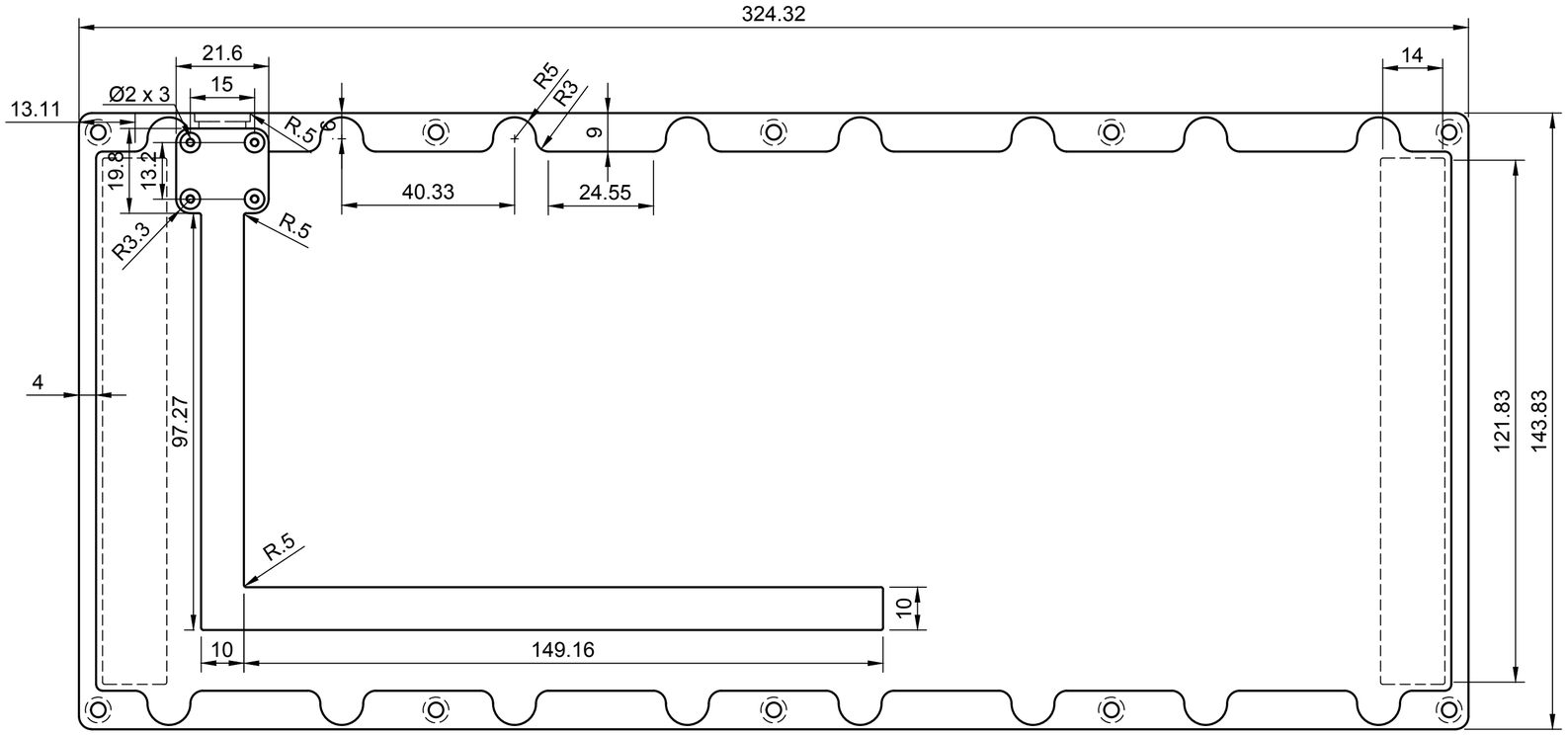
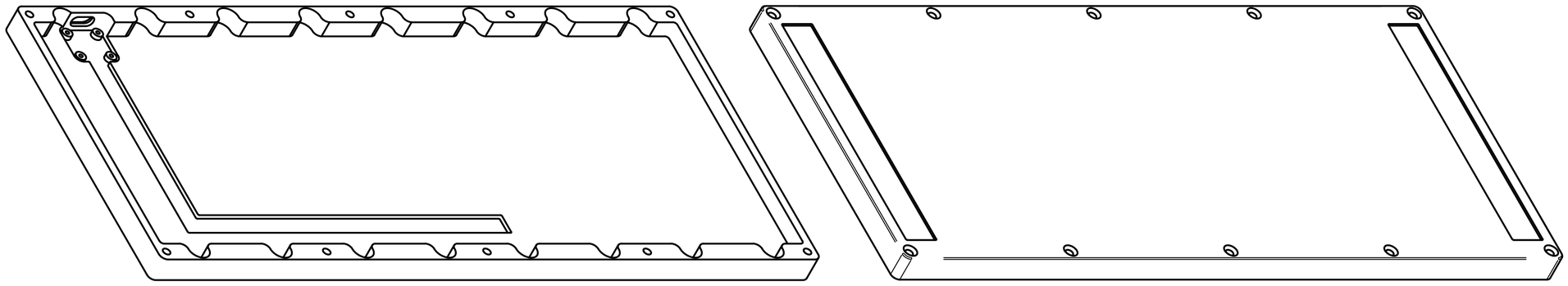
Isometric view