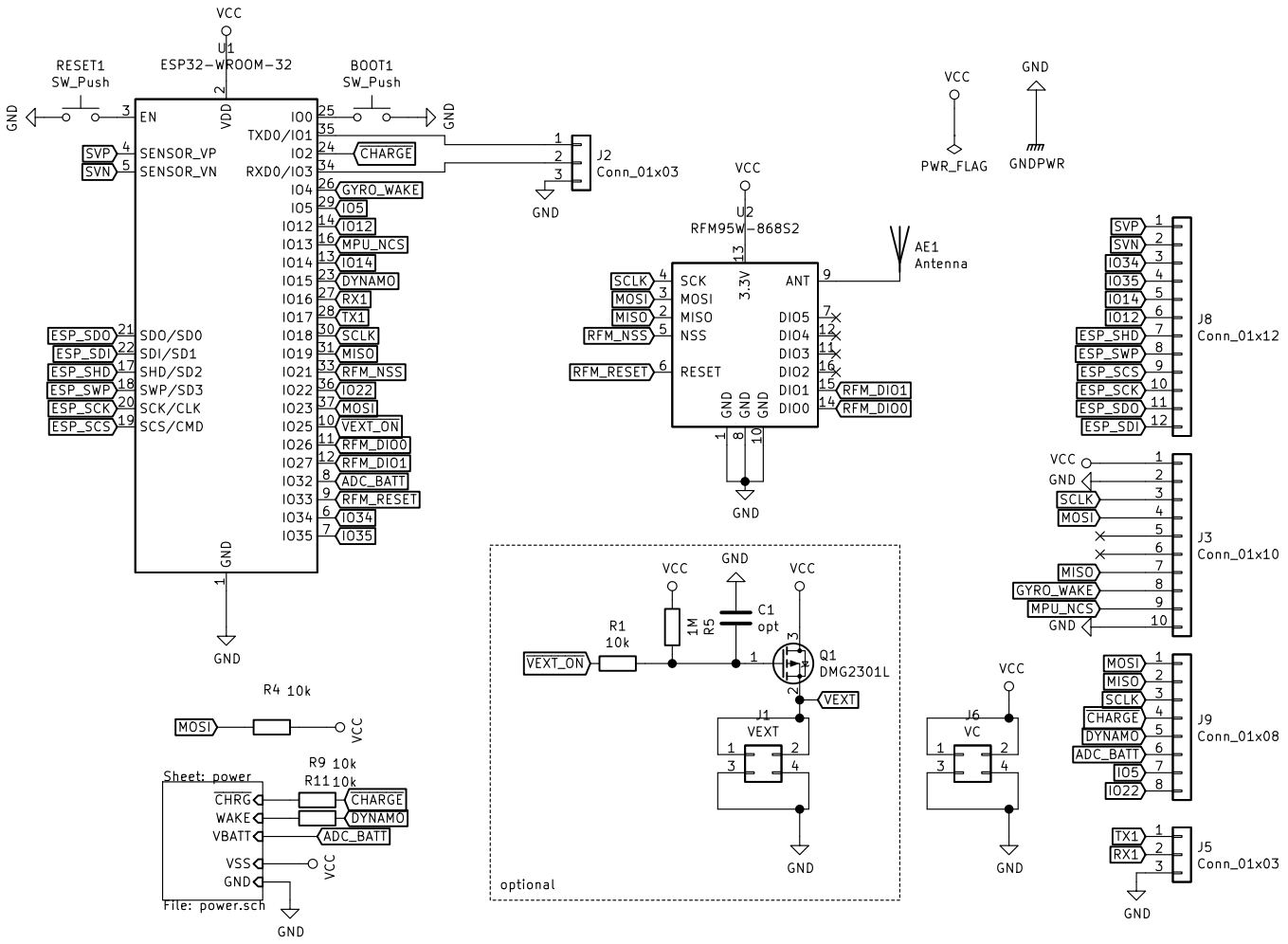

playground for open bike project

spacecarrot

Sheet: /

File: feuchtraumabzweigdose.sch

Title: feuchtraumabzweigdose pcb – logic section

Size: A4	Date: 2020-02-23	**Rev: 0.1**
KiCad E.D.A. kicad 5.1.5		Id: 1/2

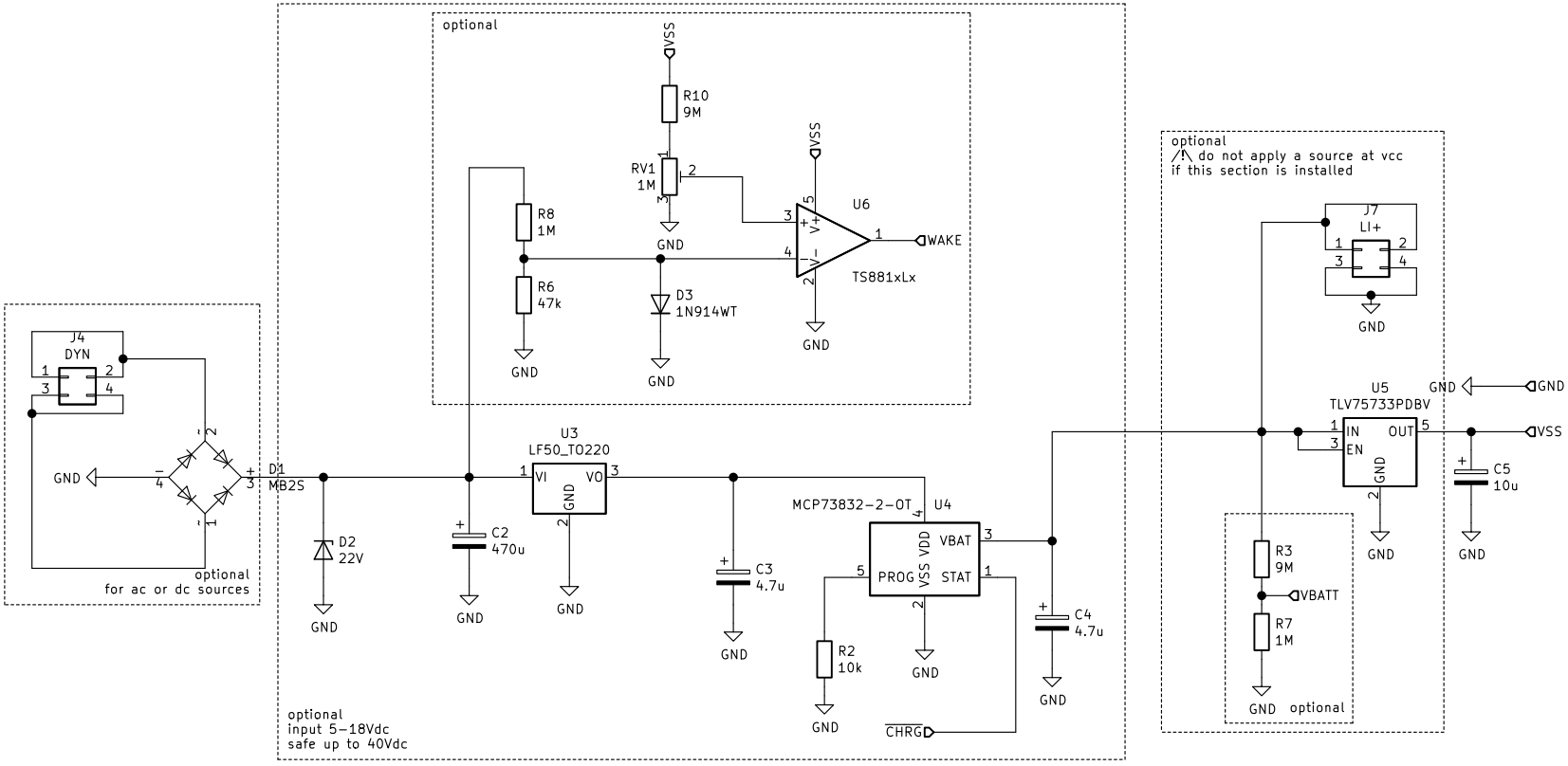

playground for open bike project

spacecarrot

Sheet: /power/

File: power.sch

Title: feuchtraumabzweigdose pcb – power section

Size: A4	Date: 2020-02-23	**Rev: 0.1**
KiCad E.D.A. kicad 5.1.5		Id: 2/2