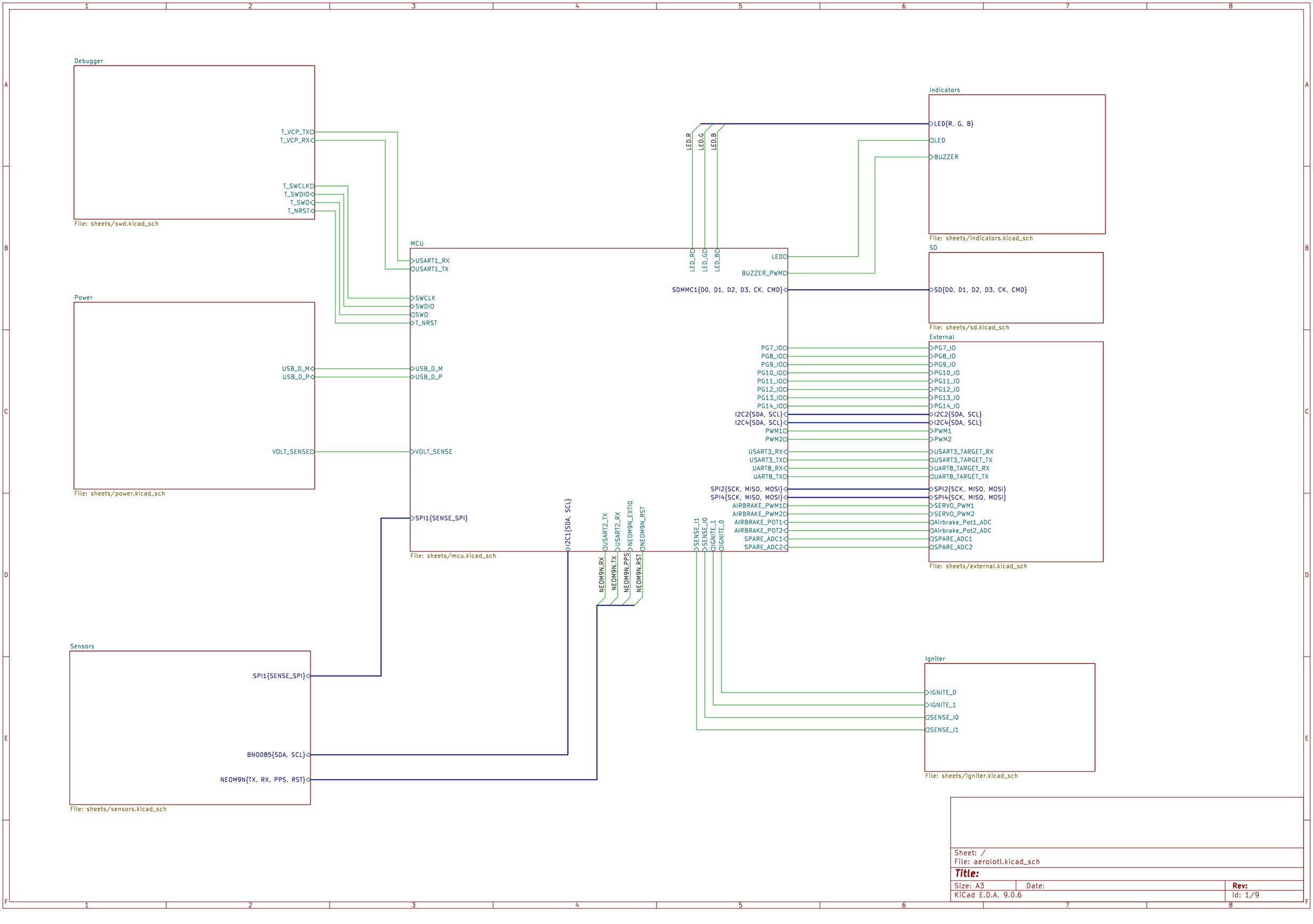
Debugger
T_VCP_TX
T_VCP_RX
T_SWCLKD
T_SWDIO
T_SWO
T_NRST
File: sheets/swd.kicad_sch
MCU
USART1_RX
USART1_TX
SWCLK
SWDIO
SWO
T_NRST
LED_RD
LED_GD
LED_BD
LED
BUZZER_PWM
SDMMC1{D0, D1, D2, D3, CK, CMD}
Indicators
LED{R, G, B}
LED
BUZZER
File: sheets/indicators.kicad_sch
SD
SD{D0, D1, D2, D3, CK, CMD}
File: sheets/sd.kicad_sch
Power
USB_D_M
USB_D_P
VOLT_SENSED
VOLT_SENSE
File: sheets/power.kicad_sch
External
PG7_IO
PG8_IO
PG9_IO
PG10_IO
PG11_IO
PG12_IO
PG13_IO
PG14_IO
I2C2{SDA, SCL}
I2C4{SDA, SCL}
PWM1
PWM2
USART3_RX
USART3_TX
UART8_RX
UART8_TX
SPI2{SCK, MISO, MOSI}
SPI4{SCK, MISO, MOSI}
AIRBRAKE_PWM1
AIRBRAKE_PWM2
AIRBRAKE_POT1
AIRBRAKE_POT2
SPARE_ADC1
SPARE_ADC2
SERVO_PWM1
SERVO_PWM2
Airbrake_Pot1_ADC
Airbrake_Pot2_ADC
USART3_TARGET_RX
USART3_TARGET_TX
UART8_TARGET_RX
UART8_TARGET_TX
File: sheets/external.kicad_sch
SPI1{SENSE_SPI}
I2C1{SDA, SCL}
USART2_TX
USART2_RX
NEO M9N_EXTI0
NEO M9N_RST
NEO M9N.RX
NEO M9N.TX
NEO M9N.PPS
NEO M9N.RST
SENSE_I1
SENSE_I0
IGNITE_1
IGNITE_0
File: sheets/mcu.kicad_sch
Sensors
SPI1{SENSE_SPI}
BNO085{SDA, SCL}
NEO M9N{TX, RX, PPS, RST}
File: sheets/sensors.kicad_sch
Igniter
IGNITE_0
IGNITE_1
SENSE_I0
SENSE_I1
File: sheets/igniter.kicad_sch
Sheet: /
File: aerolotl.kicad_sch
Title:
Size: A3
Date:
Rev:
KiCad E.D.A. 9.0.6
Id: 1/9

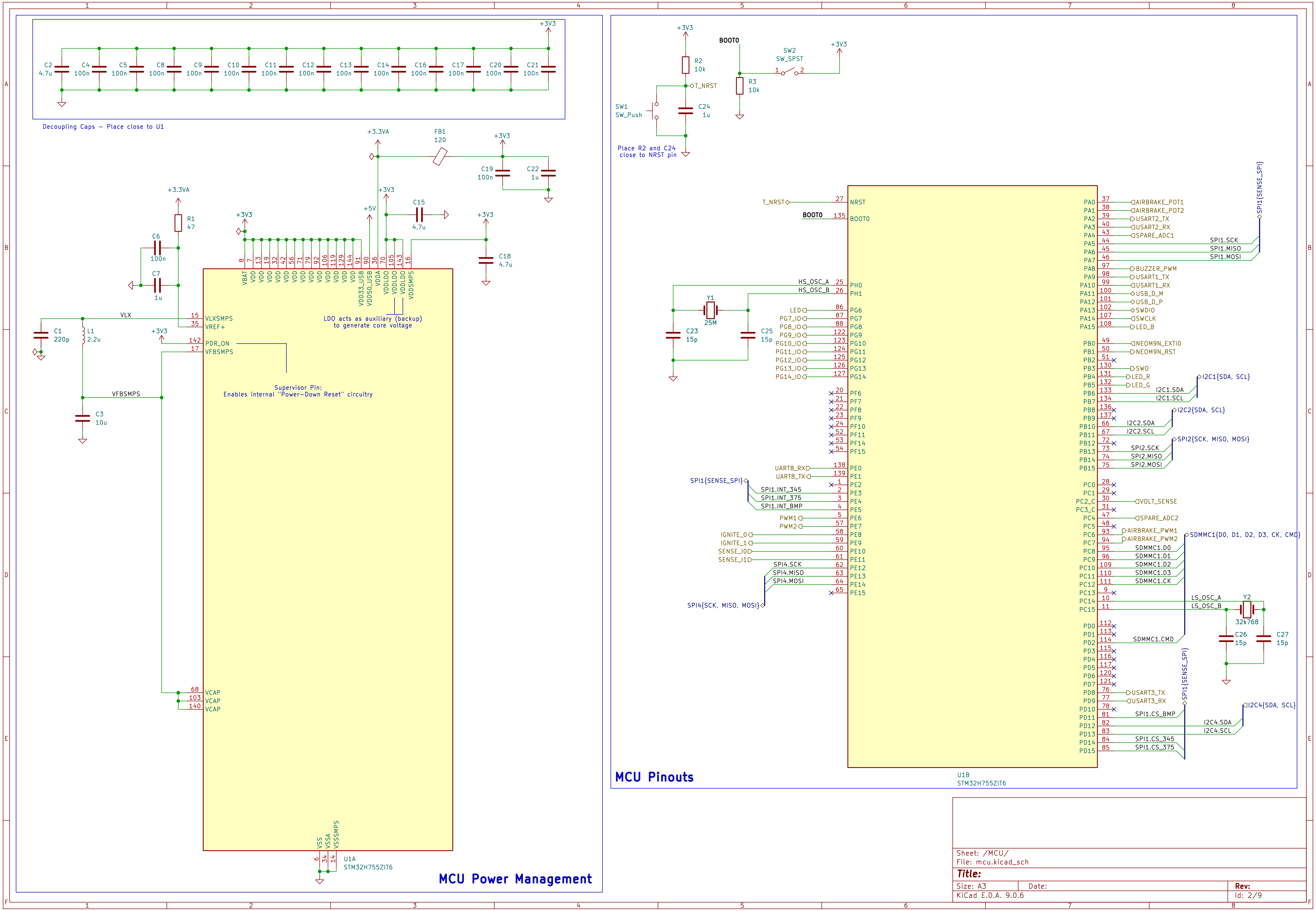

Decoupling Caps - Place close to U1
C2 4.7u
C4 100n
C5 100n
C8 100n
C9 100n
C10 100n
C11 100n
C12 100n
C13 100n
C14 100n
C16 100n
C17 100n
C20 100n
C21 100n
+3V3
+3.3VA
FB1 120
C19 100n
C22 1u
C15 4.7u
+5V
C18 4.7u
R1 47
C6 100n
C7 1u
C1 220p
L1 2.2u
VLX
VFBSMPS
C3 10u
VLXSMPS
VREF+
PDR_ON
VFBSMPS
VCAP
VBAT
VDD
VDD33_USB
VDD50_USB
VDDA
VDDLDO
VDDSMPS
LDO acts as auxiliary (backup) to generate core voltage
Supervisor Pin:
Enables internal "Power-Down Reset" circuitry
VSS
VSSA
VSSSMPS
U1A
STM32H755ZIT6
MCU Power Management
R2 10k
T_NRST
SW1 SW_Push
C24 1u
Place R2 and C24 close to NRST pin
BOOT0
R3 10k
SW2 SW_SPST
NRST
HS_OSC_A
HS_OSC_B
Y1 25M
C23 15p
C25 15p
LED
PG7_IO
PG8_IO
PG9_IO
PG10_IO
PG11_IO
PG12_IO
PG13_IO
PG14_IO
UART8_RX
UART8_TX
SPI1{SENSE_SPI}
SPI1.INT_345
SPI1.INT_375
SPI1.INT_BMP
PWM1
PWM2
IGNITE_0
IGNITE_1
SENSE_IO
SENSE_I1
SPI4.SCK
SPI4.MISO
SPI4.MOSI
SPI4{SCK, MISO, MOSI}
AIRBRAKE_POT1
AIRBRAKE_POT2
USART2_TX
USART2_RX
SPARE_ADC1
SPI1.SCK
SPI1.MISO
SPI1.MOSI
BUZZER_PWM
USART1_TX
USART1_RX
USB_D_M
USB_D_P
SWDIO
SWCLK
LED_B
NEOM9N_EXTIO
NEOM9N_RST
SWO
LED_R
LED_G
I2C1{SDA, SCL}
I2C1.SDA
I2C1.SCL
I2C2{SDA, SCL}
I2C2.SDA
I2C2.SCL
SPI2{SCK, MISO, MOSI}
SPI2.SCK
SPI2.MISO
SPI2.MOSI
VOLT_SENSE
SPARE_ADC2
AIRBRAKE_PWM1
AIRBRAKE_PWM2
SDMMC1{D0, D1, D2, D3, CK, CMD}
SDMMC1.D0
SDMMC1.D1
SDMMC1.D2
SDMMC1.D3
SDMMC1.CK
LS_OSC_A
LS_OSC_B
Y2 32k768
C26 15p
C27 15p
SDMMC1.CMD
USART3_TX
USART3_RX
I2C4{SDA, SCL}
SPI1.CS_BMP
I2C4.SDA
I2C4.SCL
SPI1.CS_345
SPI1.CS_375
U1B
STM32H755ZIT6
MCU Pinouts
Sheet: /MCU/
File: mcu.kicad_sch
Title:
Size: A3
Date:
Rev:
KiCad E.D.A. 9.0.6
Id: 2/9

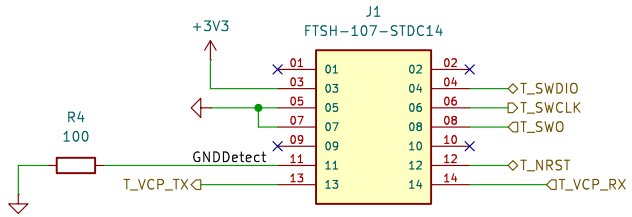

Sheet: /Debugger/	
File: swd.kicad_sch	
Title:	
Size: A4	Date:
KiCad E.D.A. 9.0.6	Id: 3/9

3.3V Supply for MCU

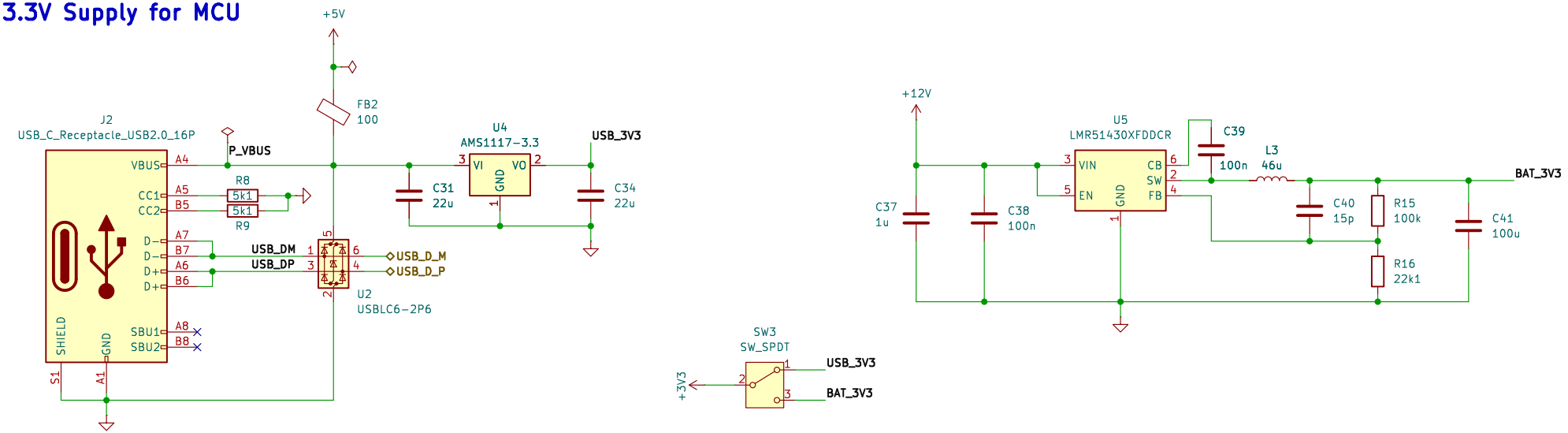

12V to 7.4V Stepdown

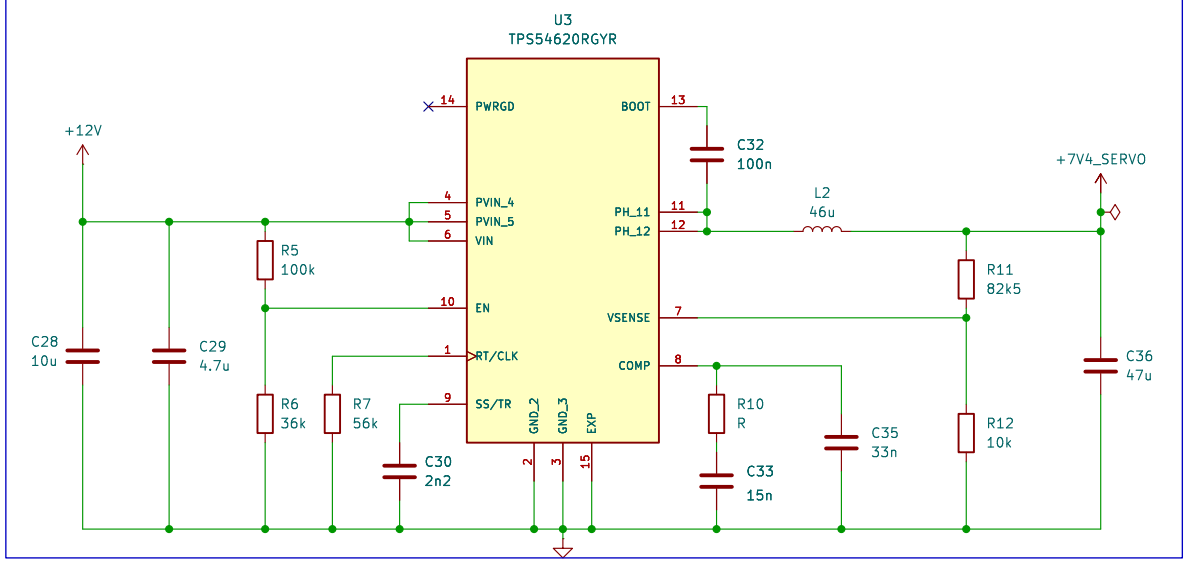

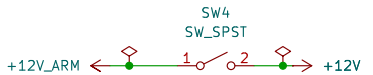

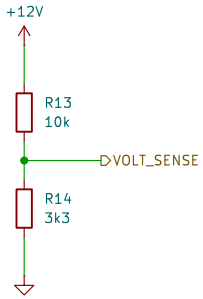

Sheet: /Power/ File: power.kicad_sch		
Title:		
Size: A4	Date:	**Rev:**
KiCad E.D.A. 9.0.6		Id: 4/9

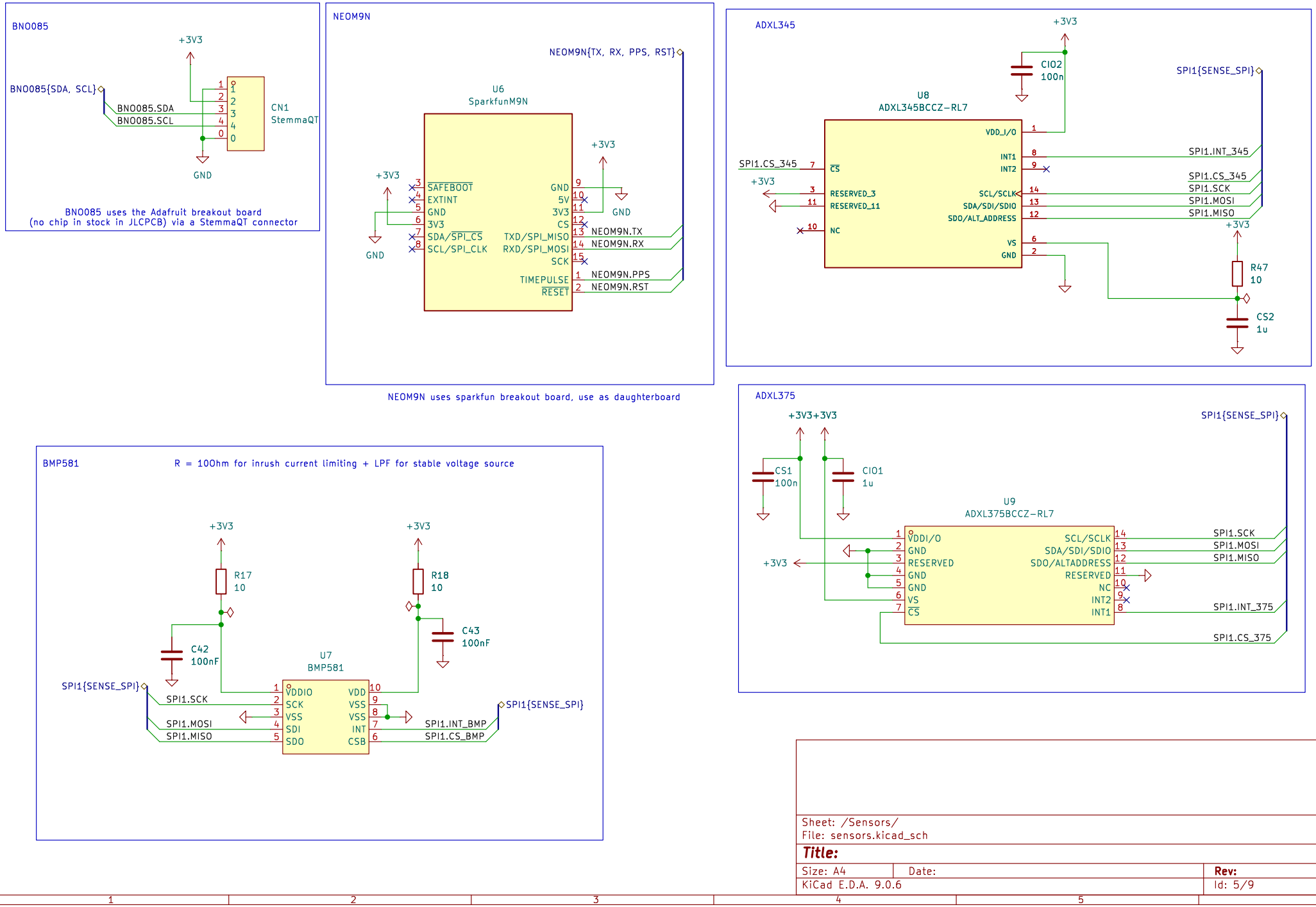
BNO085
+3V3
BNO085{SDA, SCL}
BNO085.SDA
BNO085.SCL
CN1
StemmaQT
GND
BNO085 uses the Adafruit breakout board
(no chip in stock in JLCPCB) via a StemmaQT connector
NEOM9N
NEOM9N{TX, RX, PPS, RST}
U6
SparkfunM9N
SAFEBOOT
EXTINT
GND
3V3
SDA/SPI_CS
SCL/SPI_CLK
GND
5V
3V3
CS
TXD/SPI_MISO
RXD/SPI_MOSI
SCK
TIMEPULSE
RESET
NEOM9N.TX
NEOM9N.RX
NEOM9N.PPS
NEOM9N.RST
NEOM9N uses sparkfun breakout board, use as daughterboard
ADXL345
U8
ADXL345BCCZ-RL7
CIO2
100n
SPI1{SENSE_SPI}
SPI1.CS_345
VDD_I/O
CS
RESERVED_3
RESERVED_11
NC
INT1
INT2
SCL/SCLK
SDA/SDI/SDIO
SDO/ALT_ADDRESS
VS
GND
SPI1.INT_345
SPI1.CS_345
SPI1.SCK
SPI1.MOSI
SPI1.MISO
R47
10
CS2
1u
ADXL375
+3V3+3V3
CS1
100n
CIO1
1u
U9
ADXL375BCCZ-RL7
VDDI/O
GND
RESERVED
GND
GND
VS
CS
SCL/SCLK
SDA/SDI/SDIO
SDO/ALTADDRESS
RESERVED
NC
INT2
INT1
SPI1.INT_375
SPI1.CS_375
BMP581
R = 100hm for inrush current limiting + LPF for stable voltage source
R17
10
R18
10
C42
100nF
C43
100nF
U7
BMP581
VDDIO
SCK
VSS
SDI
SDO
VDD
VSS
VSS
INT
CSB
SPI1.SCK
SPI1.MOSI
SPI1.MISO
SPI1.INT_BMP
SPI1.CS_BMP
Sheet: /Sensors/
File: sensors.kicad_sch
Title:
Size: A4
Date:
Rev:
KiCad E.D.A. 9.0.6
Id: 5/9

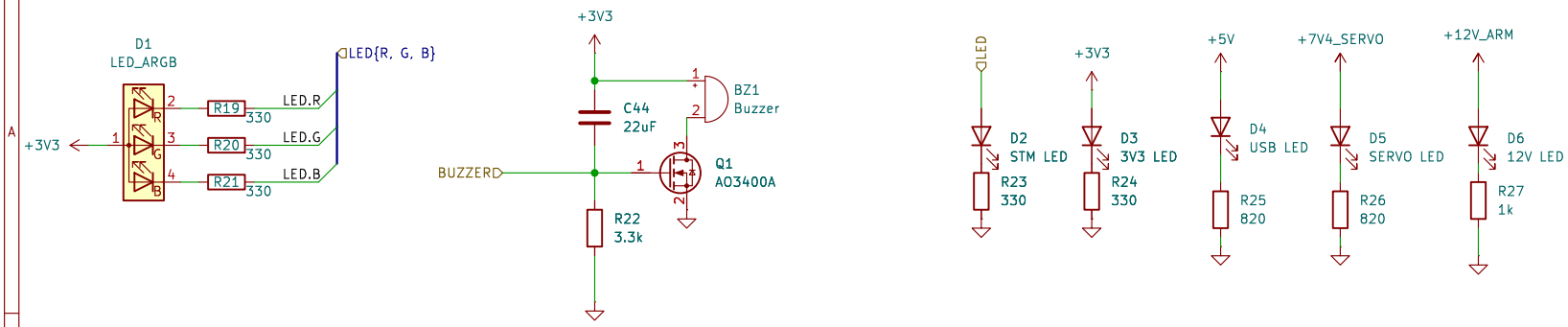

Sheet: /Indicators/		
File: indicators.kicad_sch		
Title:		
Size: A4	Date:	**Rev:**
KiCad E.D.A. 9.0.6		Id: 6/9

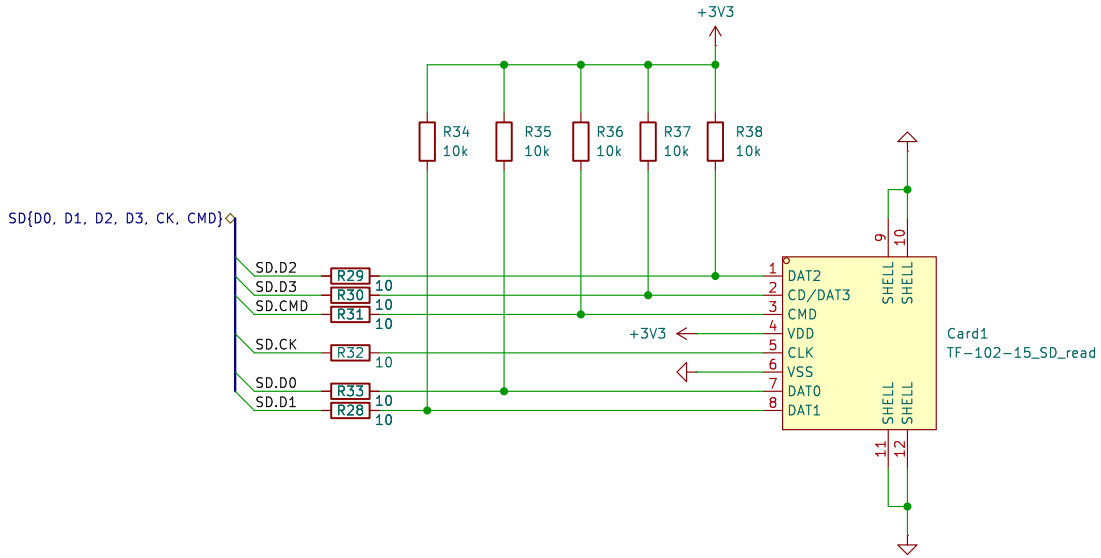

Note: make trace length short (< 2 inch from MCU to sd card reader)

Sheet: /SD/ File: sd.kicad_sch		
Title:		
Size: A4	Date:	**Rev:**
KiCad E.D.A. 9.0.6		Id: 8/9

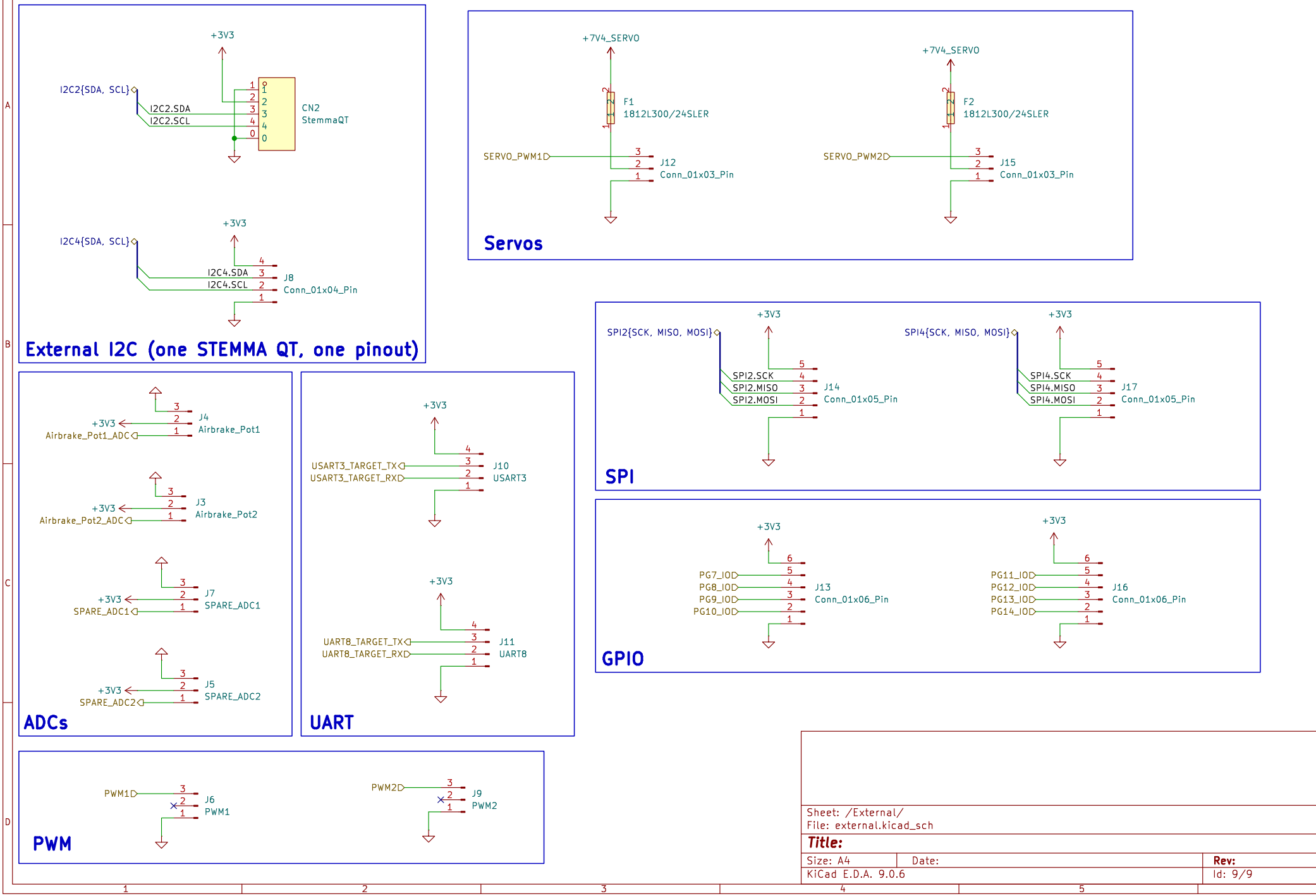
External I2C (one STEMMA QT, one pinout)
+3V3
I2C2{SDA, SCL}
I2C2.SDA
I2C2.SCL
CN2
StemmaQT
I2C4{SDA, SCL}
I2C4.SDA
I2C4.SCL
J8
Conn_01x04_Pin
Servos
+7V4_SERVO
F1
1812L300/24SLER
SERVO_PWM1
J12
Conn_01x03_Pin
F2
SERVO_PWM2
J15
SPI
SPI2{SCK, MISO, MOSI}
SPI2.SCK
SPI2.MISO
SPI2.MOSI
J14
Conn_01x05_Pin
SPI4{SCK, MISO, MOSI}
SPI4.SCK
SPI4.MISO
SPI4.MOSI
J17
GPIO
PG7_IO
PG8_IO
PG9_IO
PG10_IO
J13
Conn_01x06_Pin
PG11_IO
PG12_IO
PG13_IO
PG14_IO
J16
ADCs
Airbrake_Pot1_ADC
J4
Airbrake_Pot1
Airbrake_Pot2_ADC
J3
Airbrake_Pot2
SPARE_ADC1
J7
SPARE_ADC2
J5
UART
USART3_TARGET_TX
USART3_TARGET_RX
J10
USART3
UART8_TARGET_TX
UART8_TARGET_RX
J11
UART8
PWM
PWM1
J6
PWM2
J9
Sheet: /External/
File: external.kicad_sch
Title:
Size: A4
Date:
Rev:
KiCad E.D.A. 9.0.6
Id: 9/9

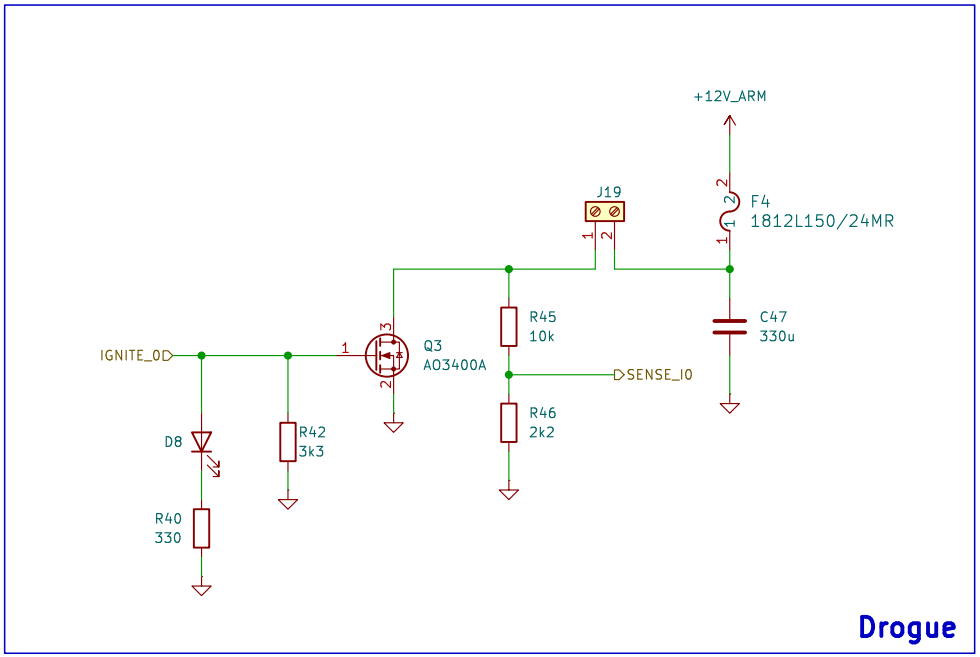

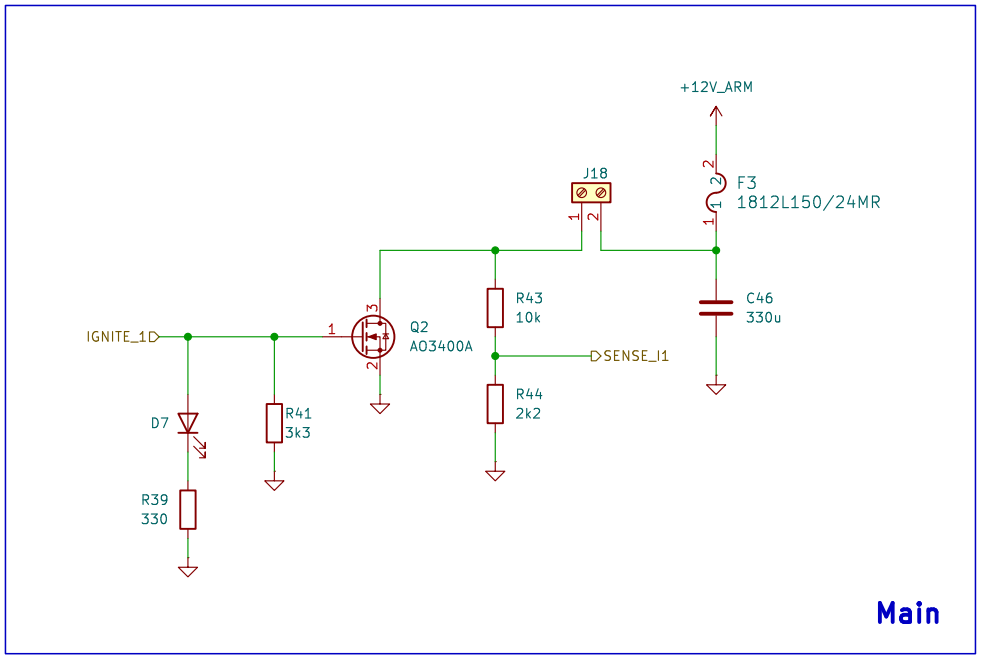

Sheet: /Igniter/		
File: igniter.kicad_sch		
Title:		
Size: A4	Date:	**Rev:**
KiCad E.D.A. 9.0.6		Id: 10/9