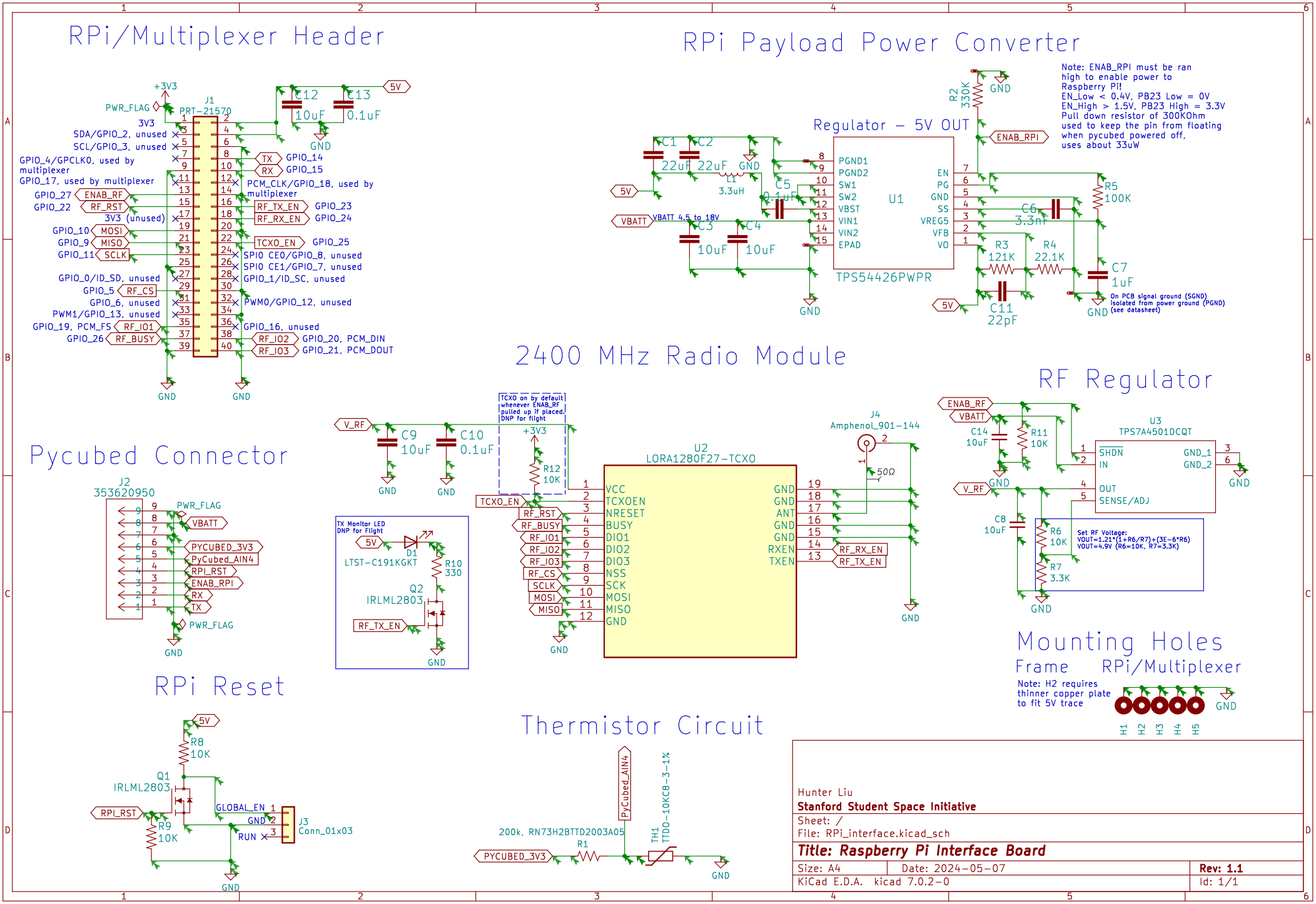
RPi/Multiplexer Header
J1
PRT-21570
+3V3
PWR_FLAG
3V3
SDA/GPIO_2, unused
SCL/GPIO_3, unused
GPIO_4/GPCLK0, used by multiplexer
GPIO_17, used by multiplexer
GPIO_27 ENAB_RF
GPIO_22 RF_RST
3V3 (unused)
GPIO_10 MOSI
GPIO_9 MISO
GPIO_11 SCLK
GPIO_0/ID_SD, unused
GPIO_5 RF_CS
GPIO_6, unused
PWM1/GPIO_13, unused
GPIO_19, PCM_FS RF_IO1
GPIO_26 RF_BUSY
TX GPIO_14
RX GPIO_15
PCM_CLK/GPIO_18, used by multiplexer
RF_TX_EN GPIO_23
RF_RX_EN GPIO_24
TCXO_EN GPIO_25
SPI0 CE0/GPIO_8, unused
SPI0 CE1/GPIO_7, unused
GPIO_1/ID_SC, unused
PWM0/GPIO_12, unused
GPIO_16, unused
RF_IO2 GPIO_20, PCM_DIN
RF_IO3 GPIO_21, PCM_DOUT
C12 10uF
C13 0.1uF
5V
GND
RPi Payload Power Converter
Regulator – 5V OUT
U1
TPS54426PWPR
PGND1
PGND2
SW1
SW2
VBST
VIN1
VIN2
EPAD
EN
PG
GND
SS
VREG5
VFB
VO
C1 22uF
C2 22uF
L1 3.3uH
C5 0.1uF
C3 10uF
C4 10uF
VBATT
VBATT 4.5 to 18V
R2 330K
ENAB_RPI
R5 100K
C6 3.3nF
R3 121K
R4 22.1K
C7 1uF
C11 22pF
On PCB signal ground (SGND) isolated from power ground (PGND) (see datasheet)
Note: ENAB_RPI must be ran high to enable power to Raspberry Pi!
EN_Low < 0.4V, PB23 Low = 0V
EN_High > 1.5V, PB23 High = 3.3V
Pull down resistor of 300KOhm used to keep the pin from floating when pycubed powered off, uses about 33uW
2400 MHz Radio Module
U2
LORA1280F27-TCXO
VCC
TCXOEN
NRESET
BUSY
DIO1
DIO2
DIO3
NSS
SCK
MOSI
MISO
GND
GND
GND
ANT
GND
GND
RXEN
TXEN
RF_RX_EN
RF_TX_EN
TCXO_EN
RF_RST
RF_BUSY
RF_IO1
RF_IO2
RF_IO3
RF_CS
SCLK
MOSI
MISO
V_RF
C9 10uF
C10 0.1uF
+3V3
R12 10K
TCXO on by default whenever ENAB_RF pulled up if placed. DNP for flight
TX Monitor LED DNP for Flight
5V
D1 LTST-C191KGKT
R10 330
Q2 IRLML2803
RF_TX_EN
J4 Amphenol_901-144
50Ω
RF Regulator
U3
TPS7A4501DCQT
ENAB_RF
VBATT
C14 10uF
R11 10K
SHDN
IN
OUT
SENSE/ADJ
GND_1
GND_2
V_RF
C8 10uF
R6 10K
R7 3.3K
Set RF Voltage:
VOUT=1.21*(1+R6/R7)+(3E-6*R6)
VOUT=4.9V (R6=10K, R7=3.3K)
Pycubed Connector
J2
353620950
PWR_FLAG
VBATT
PYCUBED_3V3
PyCubed_AIN4
RPI_RST
ENAB_RPI
RX
TX
Mounting Holes
Frame RPi/Multiplexer
Note: H2 requires thinner copper plate to fit 5V trace
H1
H2
H3
H4
H5
RPi Reset
R8 10K
Q1 IRLML2803
RPI_RST
R9 10K
GLOBAL_EN
GND
RUN
J3 Conn_01x03
Thermistor Circuit
PyCubed_AIN4
200k, RN73H2BTTD2003A05
R1
TH1 TTDO-10KC8-3-1%
PYCUBED_3V3
Hunter Liu
Stanford Student Space Initiative
Sheet: /
File: RPi_interface.kicad_sch
Title: Raspberry Pi Interface Board
Size: A4
Date: 2024-05-07
Rev: 1.1
KiCad E.D.A. kicad 7.0.2-0
Id: 1/1