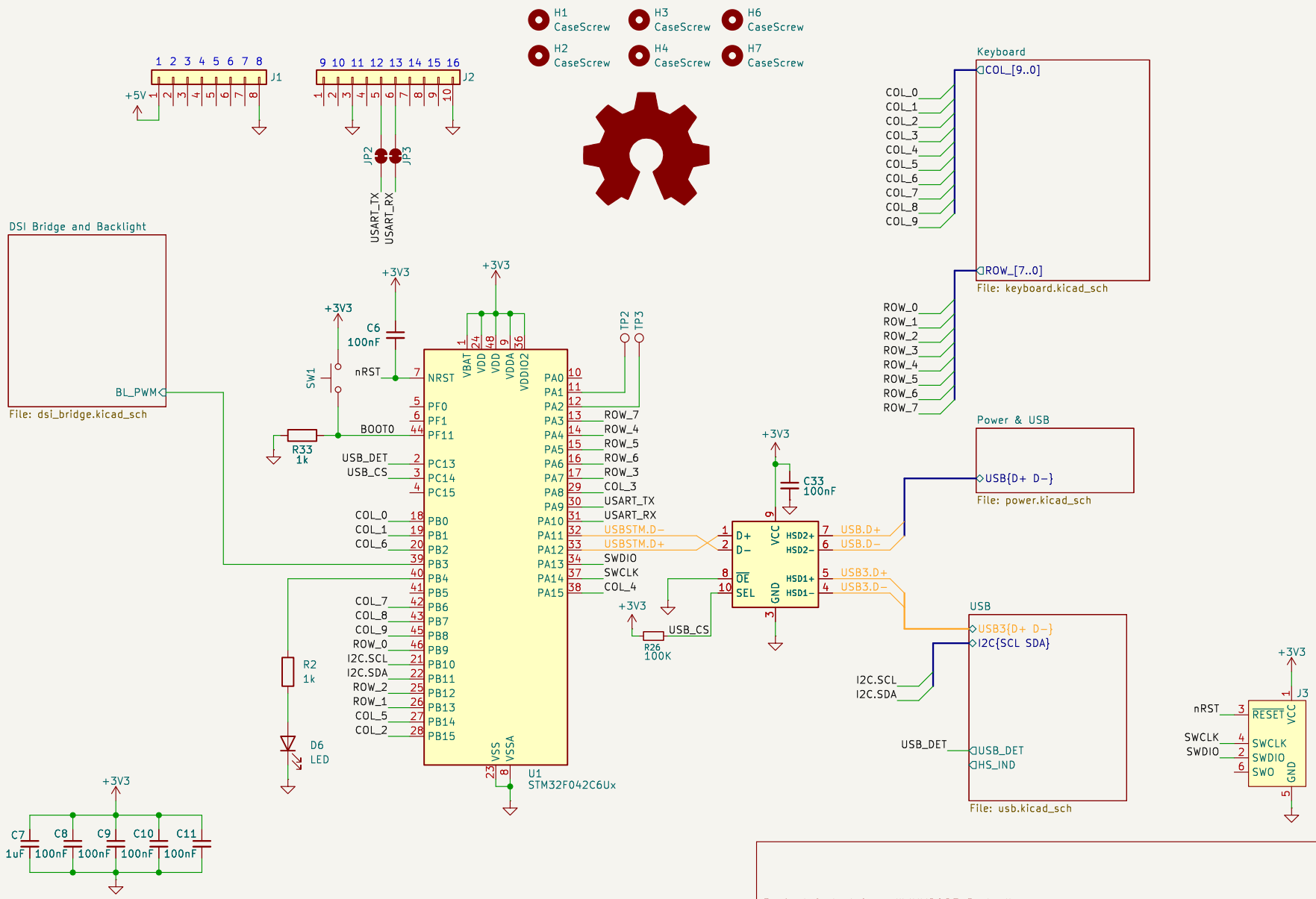

Project forked from "WHY2025 Badge"

Rootkit Labs

Sheet: /

File: blackpants.kicad_sch

Title: Blackpants

Size: A4	Date: 2025-09-18	**Rev: R0.1**
KiCad E.D.A. 9.0.7		Id: 1/5

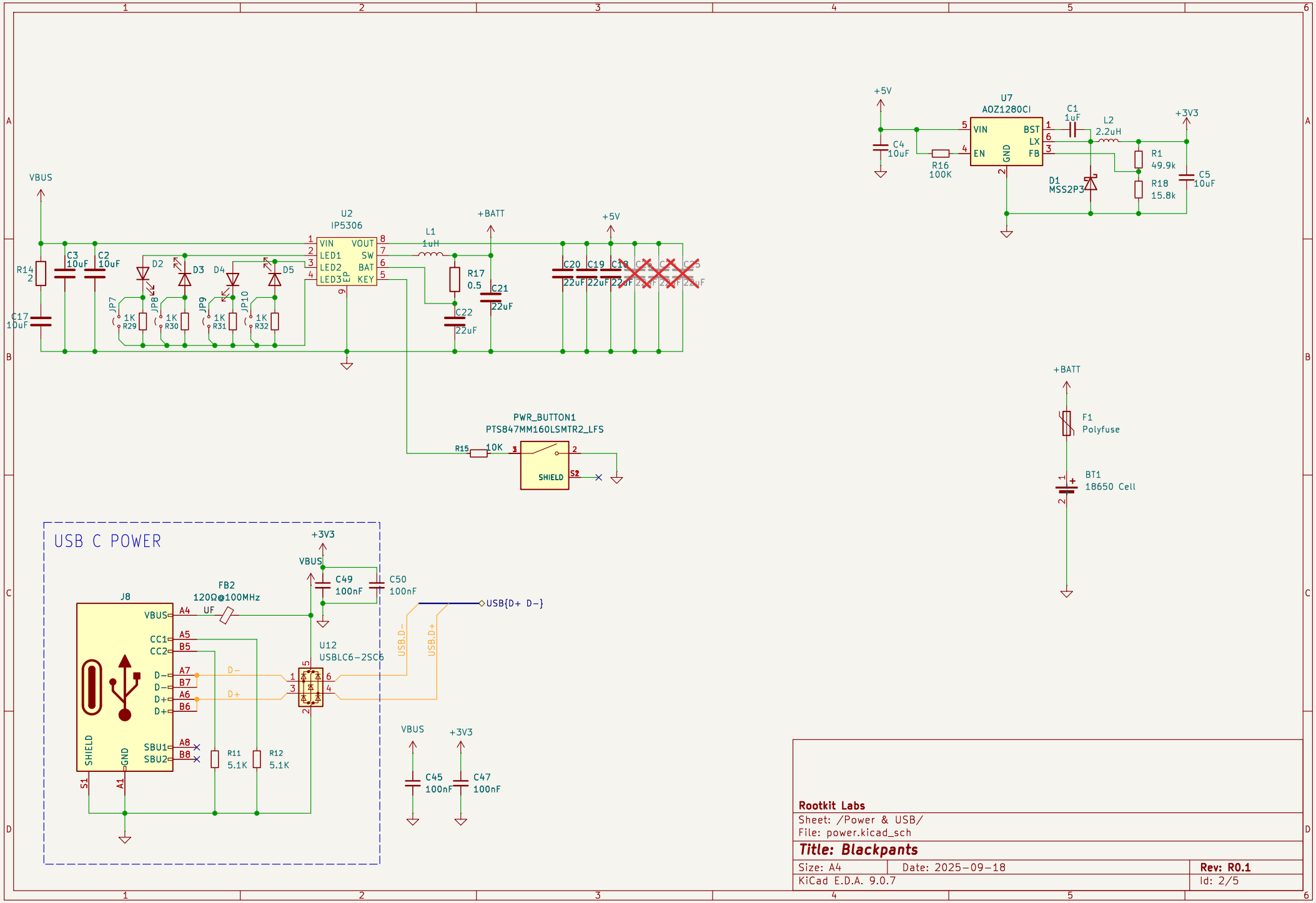

Rootkit Labs

Sheet: /Power & USB/
File: power.kicad_sch

Title: Blackpants

Size: A4	Date: 2025−09−18	**Rev: R0.1**
KiCad E.D.A. 9.0.7		Id: 2/5

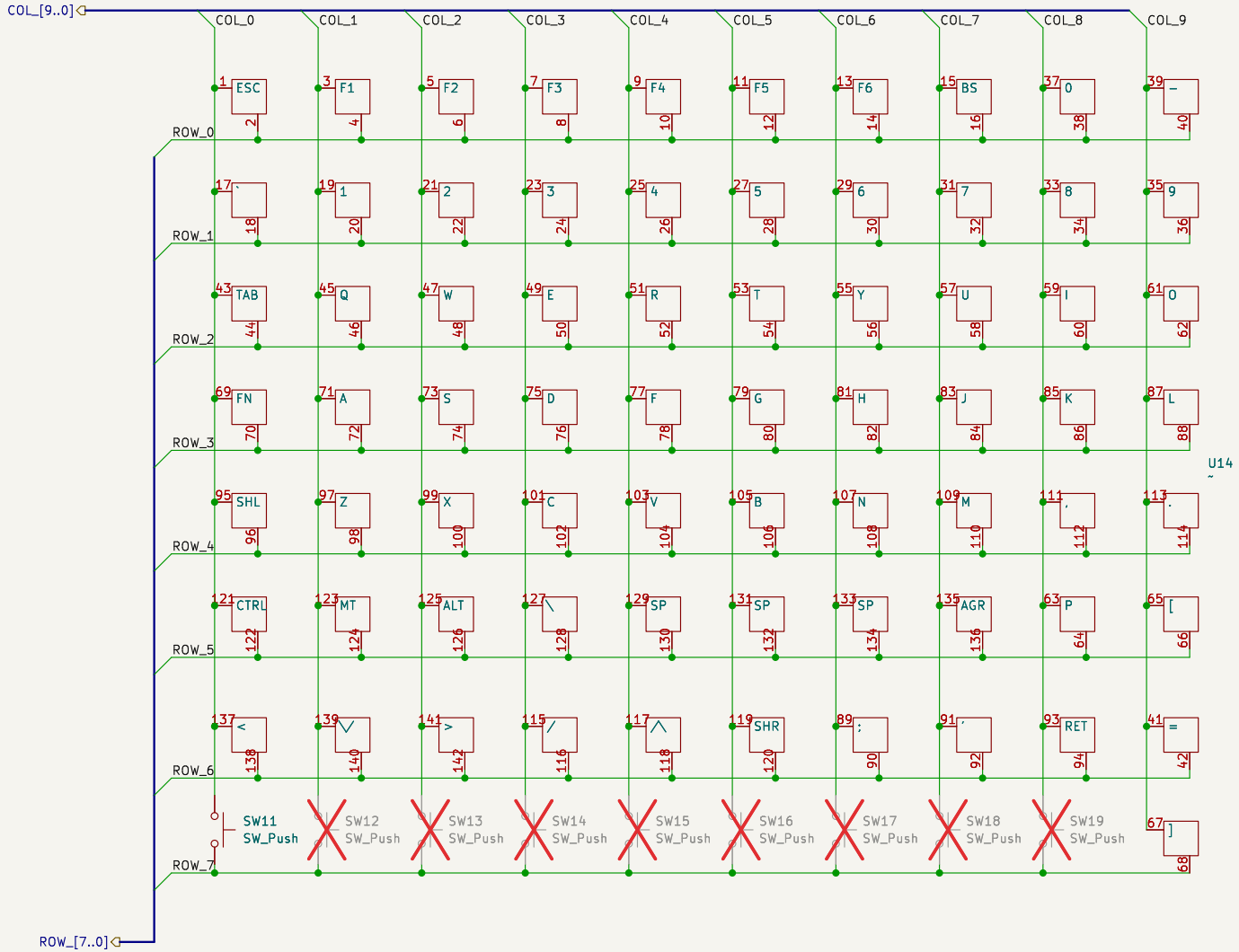

Rootkit Labs

Sheet: /Keyboard/
File: keyboard.kicad_sch

Title: Blackpants

Size: A4	Date: 2025-09-18	**Rev: R0.1**
KiCad E.D.A. 9.0.7		Id: 3/5

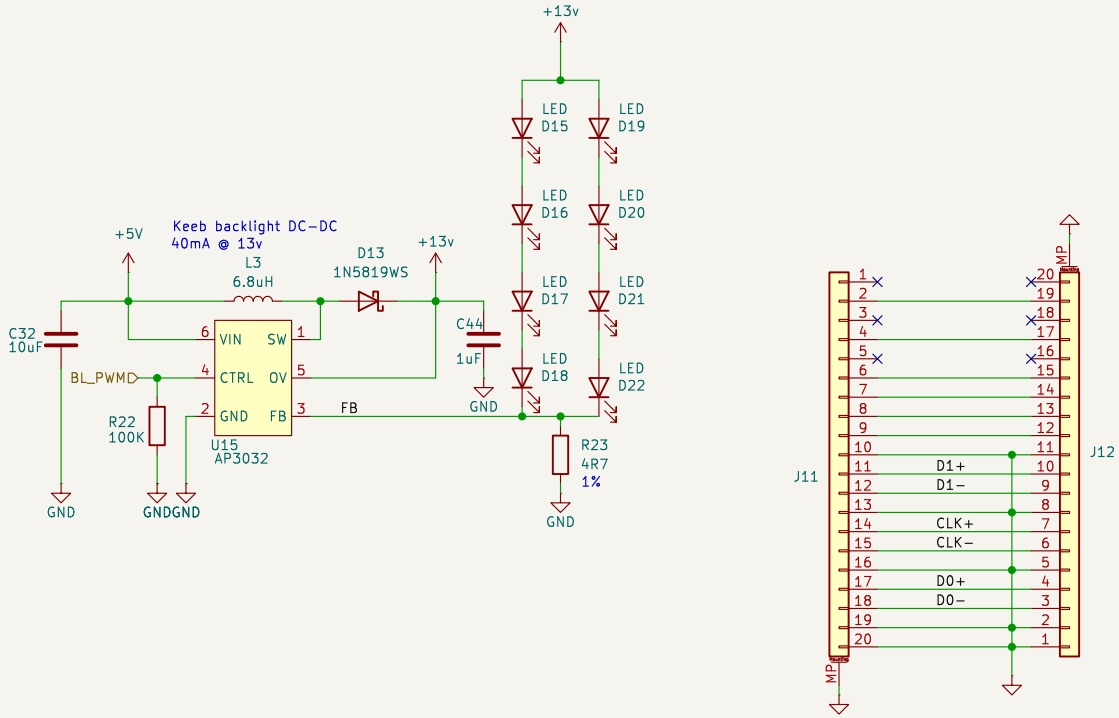

Rootkit Labs

Sheet: /DSI Bridge and Backlight/
File: dsi_bridge.kicad_sch

Title: Blackpants

Size: A4	Date: 2025-09-18	**Rev: R0.1**
KiCad E.D.A. 9.0.7		Id: 4/5

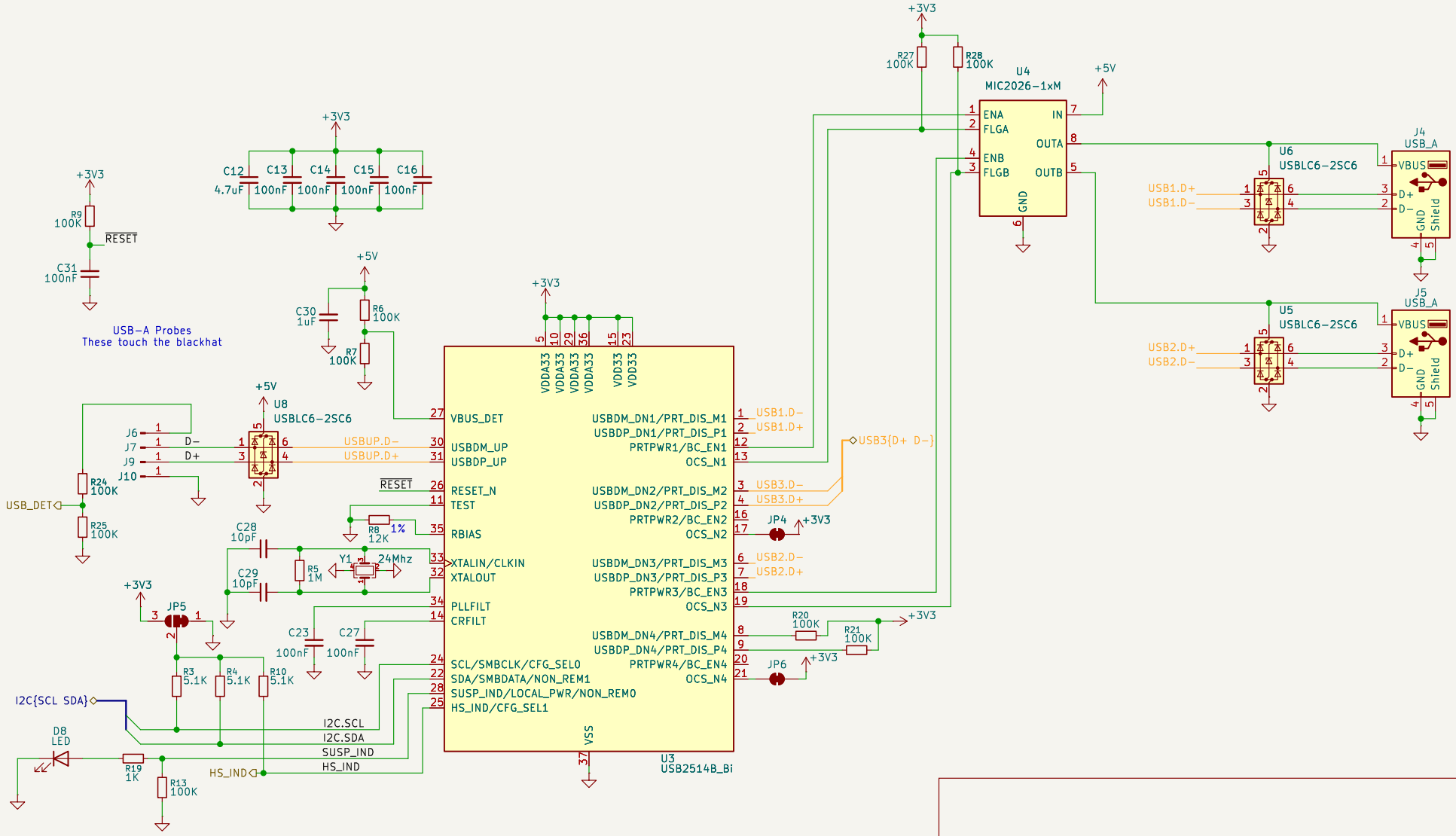

Rootkit Labs

Sheet: /USB/

File: usb.kicad_sch

Title: Blackpants

Size: A4	Date: 2025-09-18	**Rev: R0.1**
KiCad E.D.A. 9.0.7		Id: 5/5