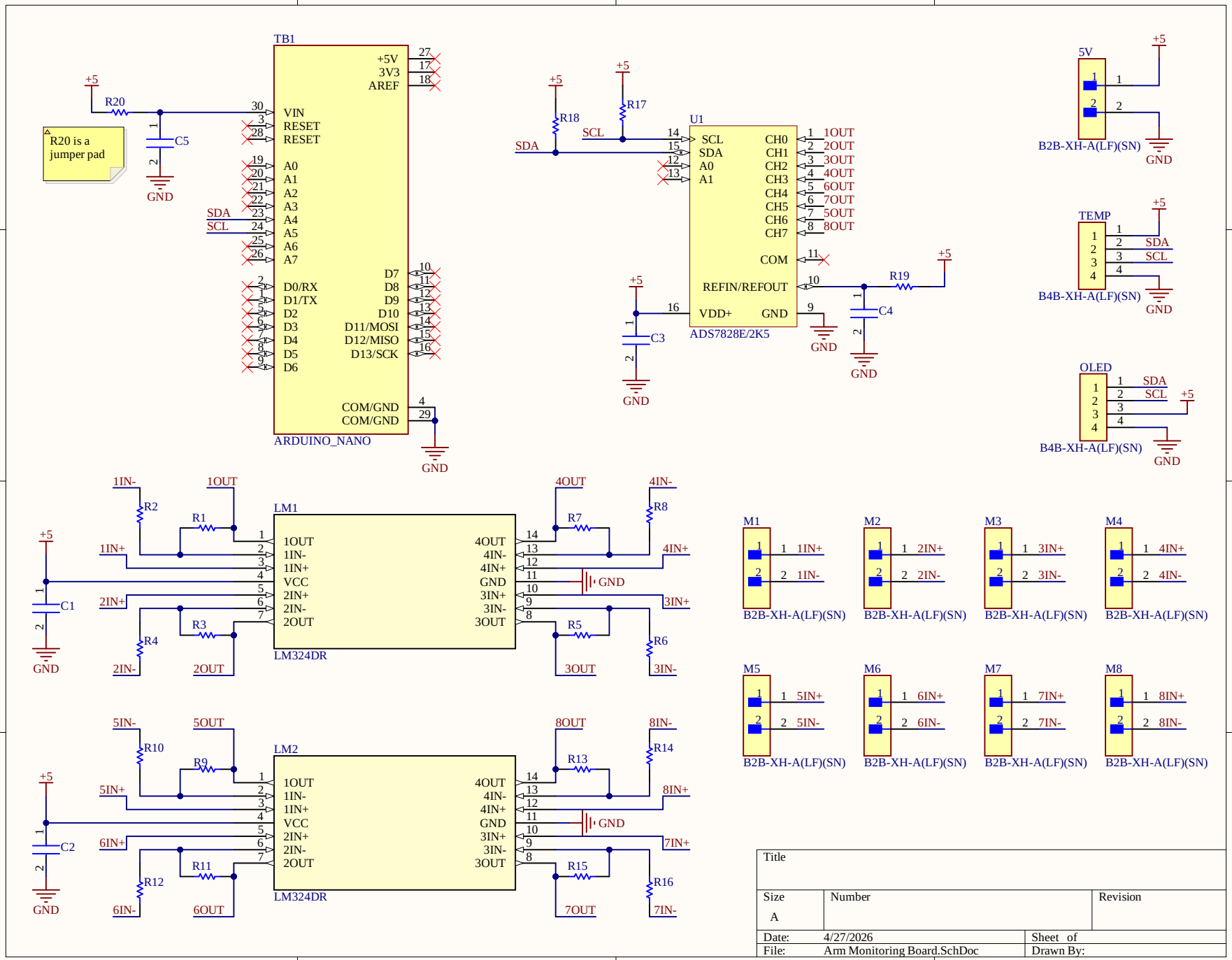
TB1
ARDUINO_NANO
+5V
3V3
AREF
VIN
RESET
RESET
A0
A1
A2
A3
A4
A5
A6
A7
D0/RX
D1/TX
D2
D3
D4
D5
D6
D7
D8
D9
D10
D11/MOSI
D12/MISO
D13/SCK
COM/GND
COM/GND
SDA
SCL
R20
C5
GND
R20 is a jumper pad
U1
ADS7828E/2K5
SCL
SDA
A0
A1
CH0
CH1
CH2
CH3
CH4
CH5
CH6
CH7
COM
REFIN/REFOUT
VDD+
GND
1OUT
2OUT
3OUT
4OUT
6OUT
7OUT
5OUT
8OUT
R18
R17
R19
C3
C4
5V
B2B-XH-A(LF)(SN)
TEMP
B4B-XH-A(LF)(SN)
OLED
B4B-XH-A(LF)(SN)
LM1
LM2
LM324DR
1IN-
1IN+
2IN-
2IN+
1OUT
2OUT
4IN-
4IN+
3IN-
3IN+
4OUT
3OUT
5IN-
5IN+
6IN-
6IN+
5OUT
6OUT
8IN-
8IN+
7IN-
7IN+
8OUT
7OUT
C1
C2
R1
R2
R3
R4
R5
R6
R7
R8
R9
R10
R11
R12
R13
R14
R15
R16
M1
M2
M3
M4
M5
M6
M7
M8
1IN+
1IN-
2IN+
2IN-
3IN+
3IN-
4IN+
4IN-
5IN+
5IN-
6IN+
6IN-
7IN+
7IN-
8IN+
8IN-
Title
Size
A
Number
Revision
Date: 4/27/2026
Sheet of
File: Arm Monitoring Board.SchDoc
Drawn By: