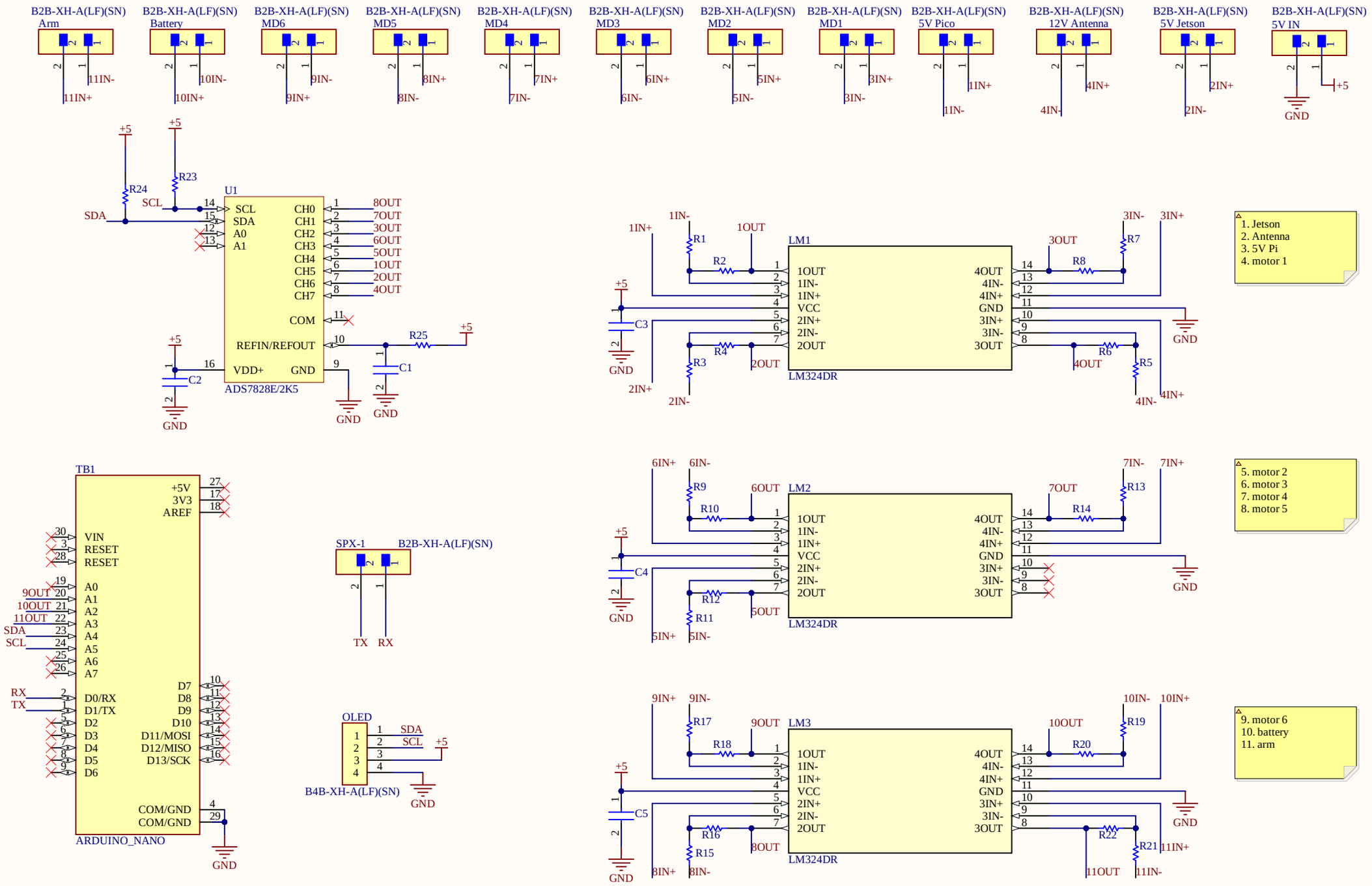
B2B-XH-A(LF)(SN) Arm
B2B-XH-A(LF)(SN) Battery
B2B-XH-A(LF)(SN) MD6
B2B-XH-A(LF)(SN) MD5
B2B-XH-A(LF)(SN) MD4
B2B-XH-A(LF)(SN) MD3
B2B-XH-A(LF)(SN) MD2
B2B-XH-A(LF)(SN) MD1
B2B-XH-A(LF)(SN) 5V Pico
B2B-XH-A(LF)(SN) 12V Antenna
B2B-XH-A(LF)(SN) 5V Jetson
B2B-XH-A(LF)(SN) 5V IN
11IN+ 11IN- 10IN+ 10IN- 9IN+ 9IN- 8IN- 8IN+ 7IN- 7IN+ 6IN- 6IN+ 5IN- 5IN+ 3IN- 3IN+ 1IN- 1IN+ 4IN- 4IN+ 2IN- 2IN+ +5 GND
U1
ADS7828E/2K5
SCL SDA A0 A1 CH0 CH1 CH2 CH3 CH4 CH5 CH6 CH7 COM REFIN/REFOUT VDD+ GND
8OUT 7OUT 3OUT 6OUT 5OUT 1OUT 2OUT 4OUT
R23 R24 R25 C1 C2
LM1 LM2 LM3
LM324DR
1OUT 1IN- 1IN+ VCC 2IN+ 2IN- 2OUT 4OUT 4IN- 4IN+ GND 3IN+ 3IN- 3OUT
R1 R2 R3 R4 R5 R6 R7 R8 C3
R9 R10 R11 R12 R13 R14 C4
R15 R16 R17 R18 R19 R20 R21 R22 C5
1. Jetson
2. Antenna
3. 5V Pi
4. motor 1
5. motor 2
6. motor 3
7. motor 4
8. motor 5
9. motor 6
10. battery
11. arm
TB1
ARDUINO_NANO
+5V 3V3 AREF VIN RESET RESET A0 A1 A2 A3 A4 A5 A6 A7 D0/RX D1/TX D2 D3 D4 D5 D6 D7 D8 D9 D10 D11/MOSI D12/MISO D13/SCK COM/GND COM/GND
9OUT 10OUT 11OUT SDA SCL RX TX
SPX-1 B2B-XH-A(LF)(SN)
TX RX
OLED
B4B-XH-A(LF)(SN)
SDA SCL