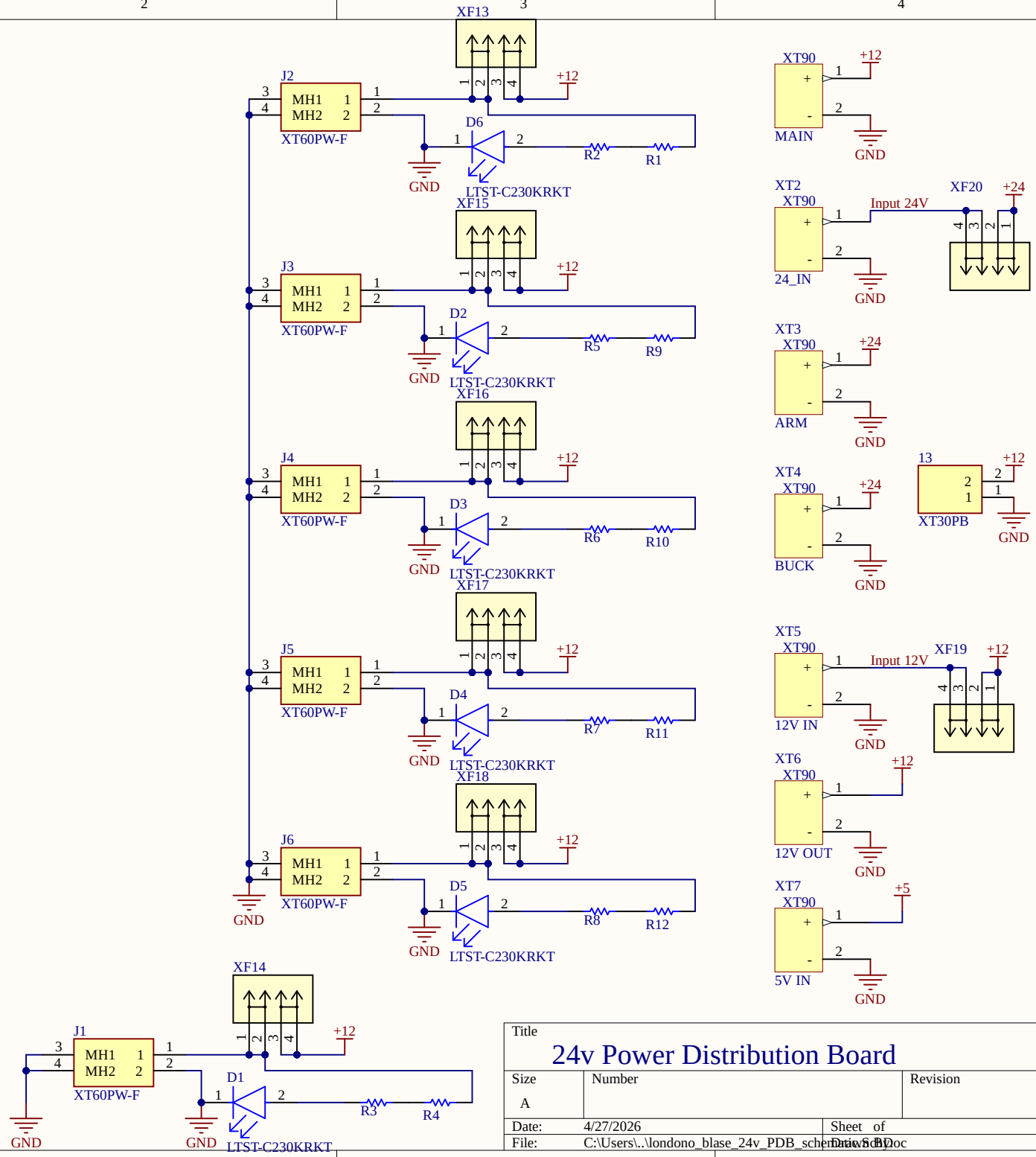

Title

24v Power Distribution Board

Size	Number	Revision
A		

Date: 4/27/2026 Sheet of

File: C:\Users\..\londono_blase_24v_PDB_schematics.SchDoc Drawn By:

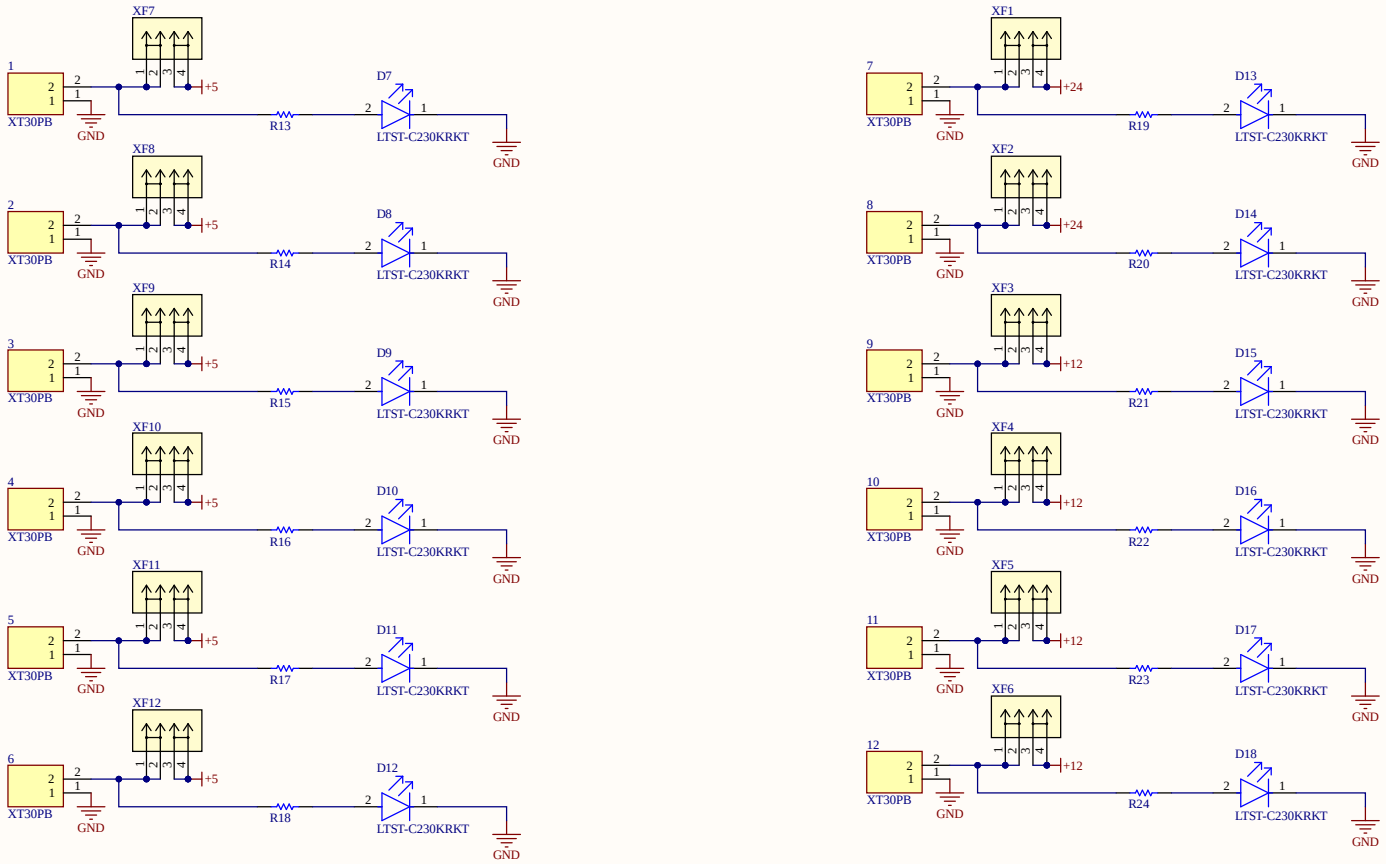

Title		
Size B	Number	Revision
Date: 4/27/2026		Sheet of
File: C:\Users\..\Sheet2.SchDoc		Drawn By:

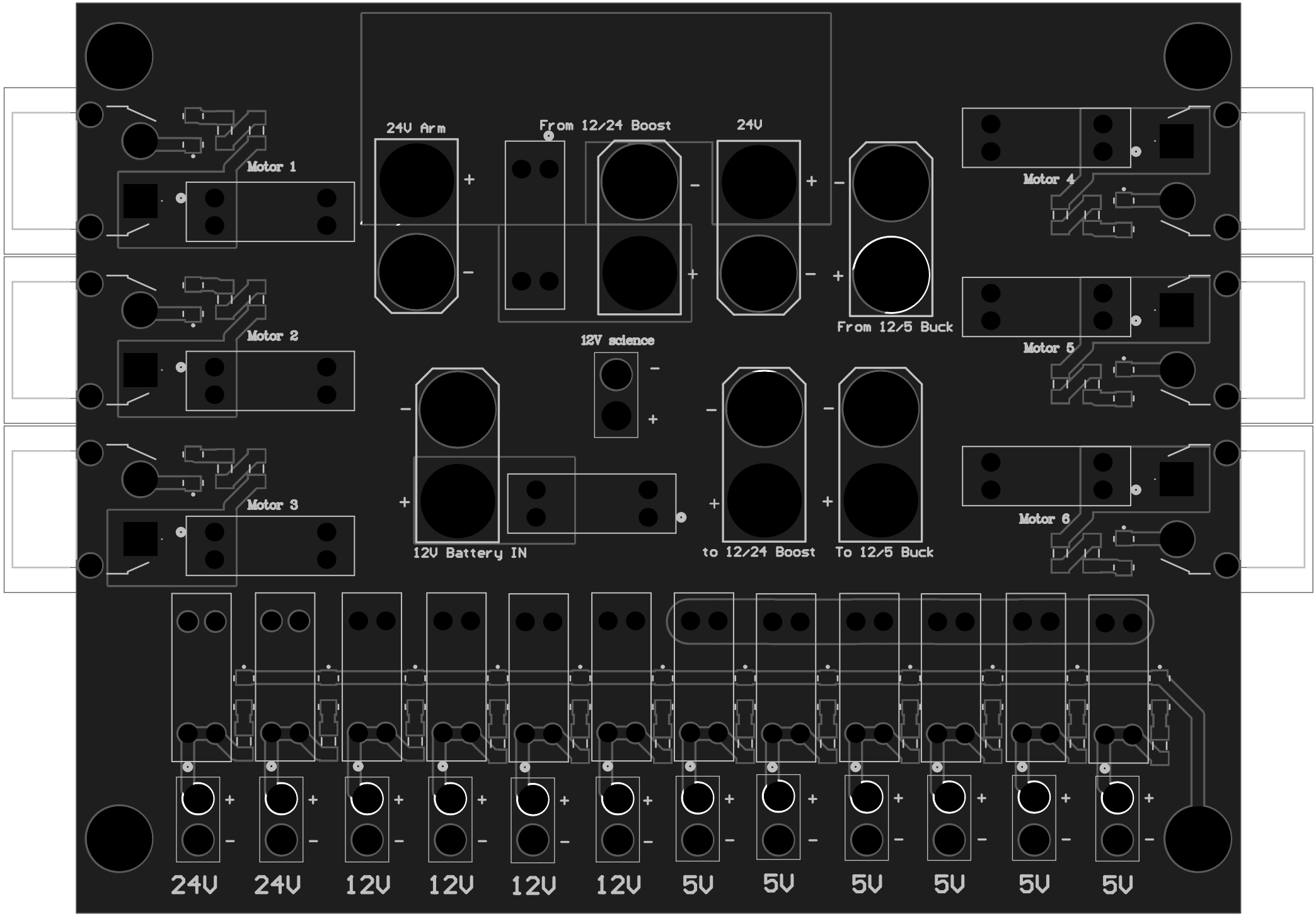
Motor 1
Motor 2
Motor 3
24V Arm
From 12/24 Boost
24V
From 12/5 Buck
Motor 4
Motor 5
Motor 6
12V science
12V Battery IN
to 12/24 Boost
To 12/5 Buck
24V
24V
12V
12V
12V
12V
5V
5V
5V
5V
5V
5V