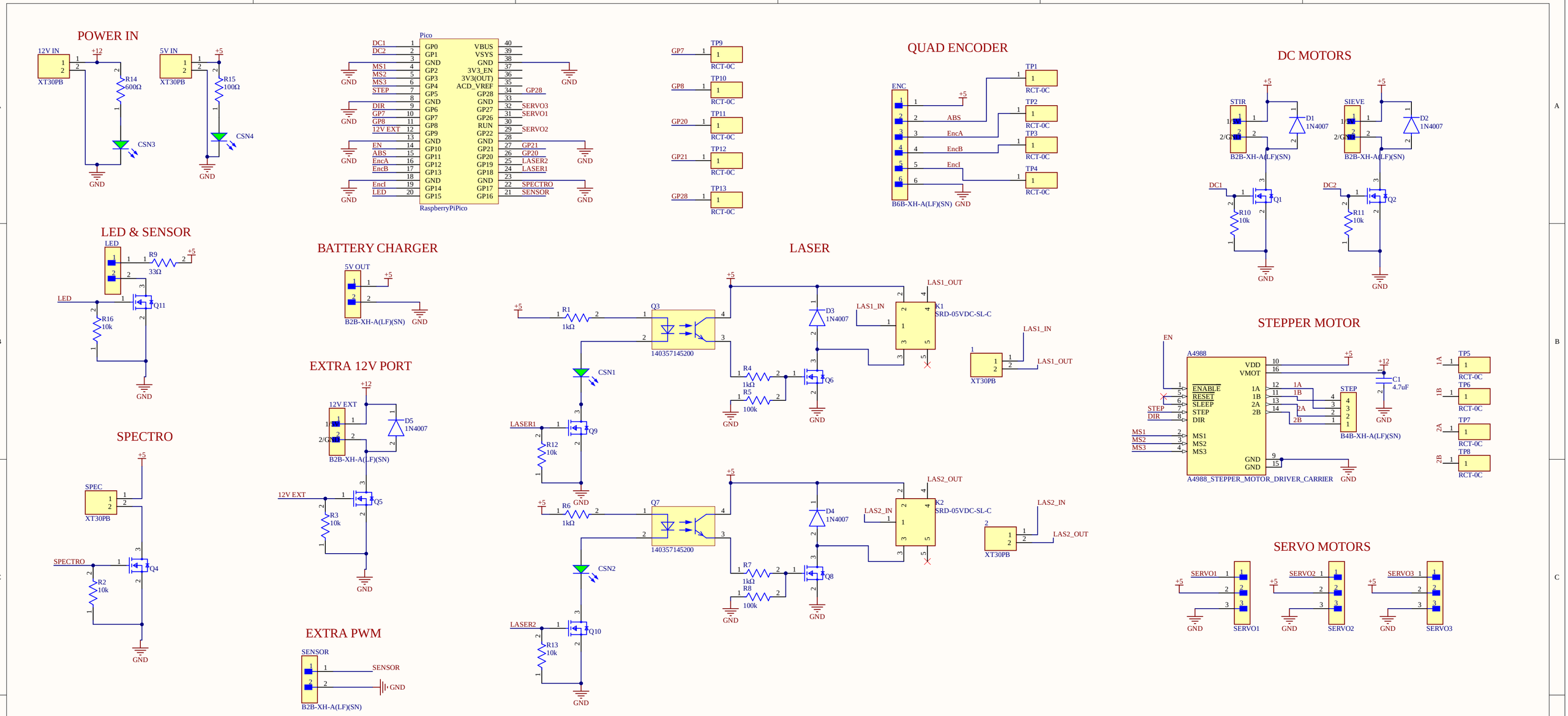

Title		
Size C	Number	Revision
Date: 4/27/2026		Sheet of
File: science_sch.SchDoc		Drawn By: