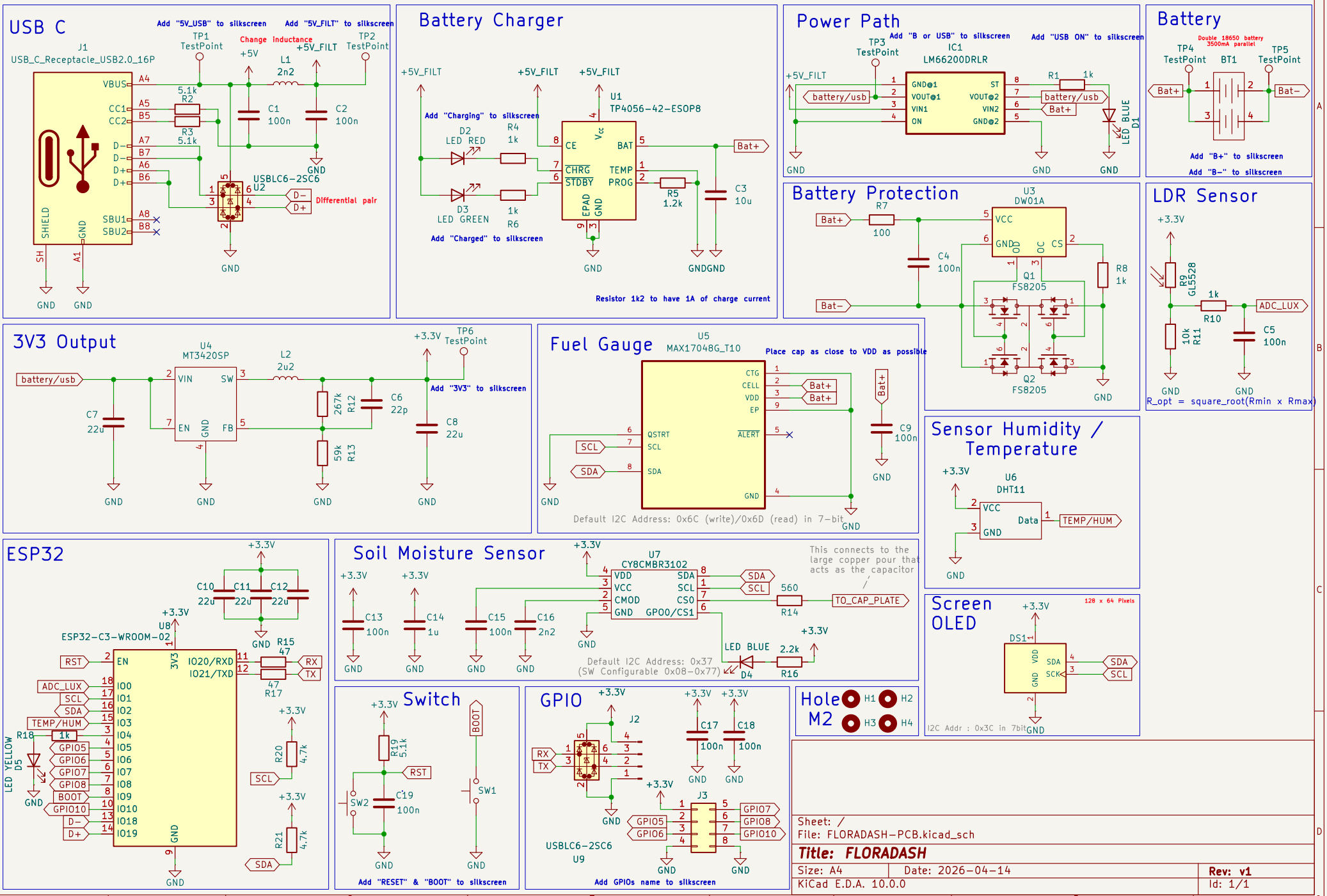
USB C
Add "5V_USB" to silkscreen
Add "5V_FILT" to silkscreen
Change inductance
J1
USB_C_Receptacle_USB2.0_16P
TP1 TestPoint
TP2 TestPoint
+5V
+5V_FILT
L1 2n2
C1 100n
C2 100n
R2 5.1k
R3 5.1k
USBLC6-2SC6
U2
Differential pair
GND
Battery Charger
+5V_FILT
U1
TP4056-42-ESOP8
Add "Charging" to silkscreen
D2 LED RED
D3 LED GREEN
R4 1k
R6 1k
R5 1.2k
C3 10u
Bat+
Add "Charged" to silkscreen
Resistor 1k2 to have 1A of charge current
Power Path
Add "B or USB" to silkscreen
Add "USB ON" to silkscreen
TP3 TestPoint
IC1
LM66200DRLR
battery/usb
Bat+
R1 1k
LED BLUE D1
Battery
Double 18650 battery 3500mA parallel
TP4 TestPoint
BT1
TP5 TestPoint
Add "B+" to silkscreen
Add "B−" to silkscreen
Battery Protection
U3
DW01A
R7 100
C4 100n
Q1 FS8205
Q2 FS8205
R8 1k
Bat−
LDR Sensor
+3.3V
R9 GL5528
R10 1k
R11 10k
C5 100n
ADC_LUX
R_opt = square_root(Rmin x Rmax)
3V3 Output
U4
MT3420SP
battery/usb
L2 2u2
C7 22u
C8 22u
C6 22p
R12 267k
R13 59k
TP6 TestPoint
Add "3V3" to silkscreen
Fuel Gauge
U5
MAX17048G_T10
Place cap as close to VDD as possible
SCL
SDA
C9 100n
Default I2C Address: 0x6C (write)/0x6D (read) in 7-bit
Sensor Humidity / Temperature
U6
DHT11
TEMP/HUM
ESP32
ESP32-C3-WROOM-02
U8
C10 22u
C11 22u
C12 22u
R15 47
R17 47
RX
TX
RST
ADC_LUX
TEMP/HUM
R18 1k
LED YELLOW D5
GPIO5
GPIO6
GPIO7
GPIO8
BOOT
GPIO10
D−
D+
R20 4.7k
R21 4.7k
Soil Moisture Sensor
U7
CY8CMBR3102
C13 100n
C14 1u
C15 100n
C16 2n2
R14 560
TO_CAP_PLATE
This connects to the large copper pour that acts as the capacitor
LED BLUE D4
R16 2.2k
Default I2C Address: 0x37
(SW Configurable 0x08−0x77)
Screen OLED
128 x 64 Pixels
DS1
I2C Addr : 0x3C in 7bit
Switch
R19 5.1k
C19 100n
SW2
SW1
Add "RESET" & "BOOT" to silkscreen
GPIO
J2
J3
C17 100n
C18 100n
USBLC6-2SC6
U9
Add GPIOs name to silkscreen
Hole M2
H1
H2
H3
H4
Sheet: /
File: FLORADASH-PCB.kicad_sch
Title: FLORADASH
Size: A4
Date: 2026-04-14
Rev: v1
KiCad E.D.A. 10.0.0
Id: 1/1