User Manual

Moisture Analyzer

Excellence Plus HX204

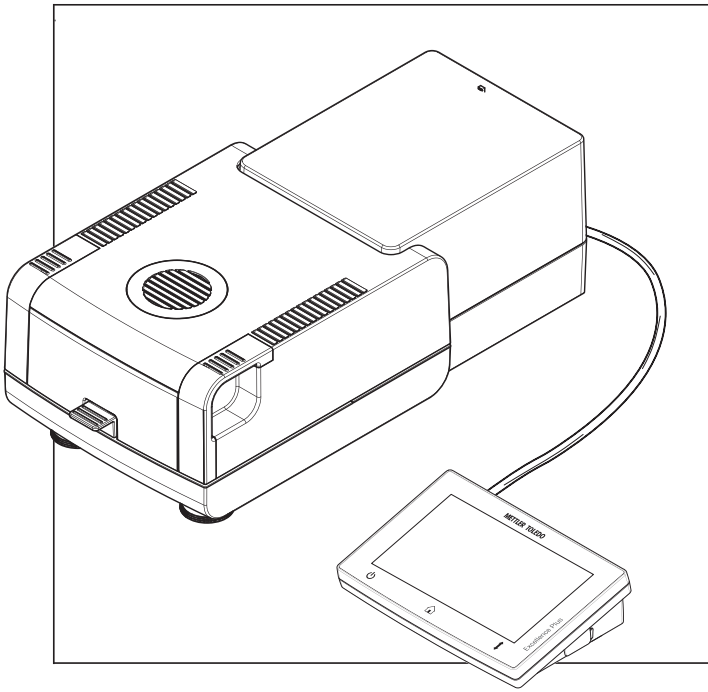

METTLER TOLEDO

This User Manual is a brief instruction that provides information to handle with the first steps of the instrument in a safe and efficient manner. Personnel must have carefully read and understood this manual before performing any tasks.

For full information, always refer to the Reference Manual (RM).

▶ www.mt.com/HX204-RM

Overview drying unit

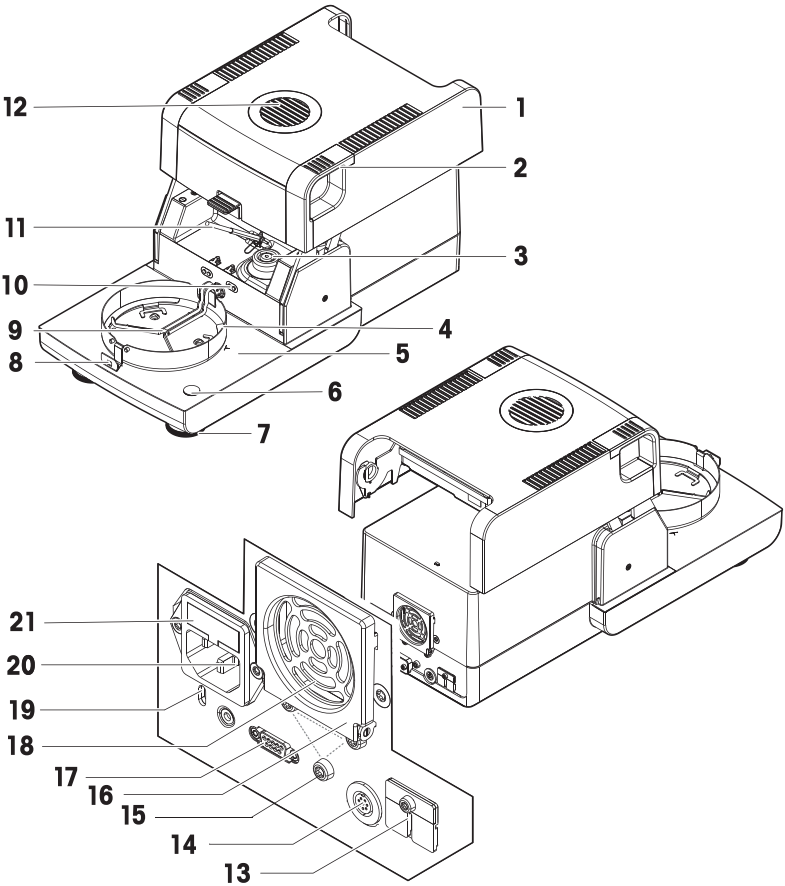

Legend drying unit

1 Heating module (with thermal overload protection)
2 Handles for opening the sample chamber
3 Power contacts for halogen lamp
4 Draft shield element
5 Sample chamber
6 Level indicator / Level sensor
7 Leveling screw
8 Sample pan handler
9 Sample pan holder
10 Contacts for temperature kit (optional)
11 Temperature sensor
12 Inspection window and vent
13 2 Aux ports (n.a.)
14 Socket for terminal connection cable
15 Fastening for terminal stand
16 Fan
17 RS232C (for production only)
18 Dust filter (optional)
19 Kensington slot for anti-theft purposes
20 Power supply socket
21 Power line fuse (plus replacement fuse)

Overview terminal

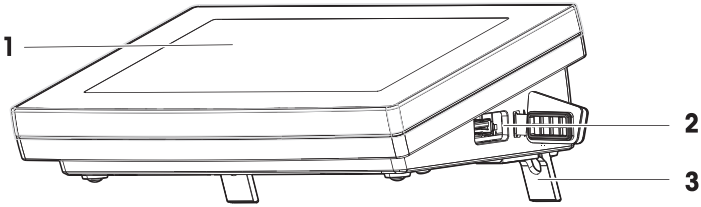

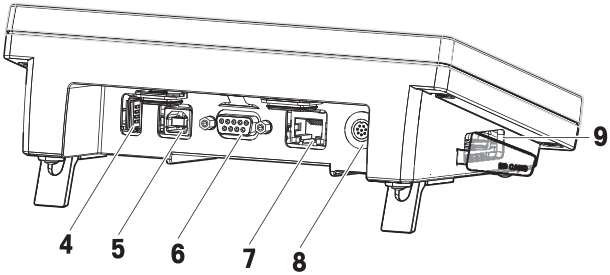

Legend terminal

1 Touch screen
2 USB Host port 1
3 Foot
4 USB Host port 2
5 USB Device port
6 RS232C port
7 Ethernet RJ45 port
8 Socket for terminal connection cable
9 SD Memory Card slot

Overview operation keys

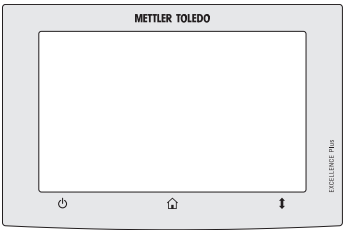

Legend key functions

⏻	⌂	↕
ON/OFF	Home	Open/Close the sample chamber

Table of Contents

1 Introduction 3
1.1 Further documents and information 3
1.2 Compliance information 3

2 Safety Information 3
2.1 Further applicable documents 3
2.2 Definition of signal warnings and symbols 4
2.3 Product specific safety information 4

3 Design and Function 6
3.1 Operation Keys 6
3.2 Screen navigation 6
3.3 Home Screen 7
3.4 Work Screen 7

4 Installation and Putting into Operation 8
4.1 Selecting the location 8
4.2 Unpacking 8
4.3 Scope of delivery 9
4.4 Connecting the instrument 9
4.5 Opening and closing sample chamber 10
4.6 Setting up the instrument 10
4.7 Leveling the instrument 11
4.8 Setting date and time 12
4.9 Adjustments 12
4.10 Transporting, packaging and storing 13
4.10.1 Transporting the Moisture Analyzer 13
4.10.2 Putting into operation after transport 13
4.10.3 Packaging and storing 13

5 Maintenance 14
5.1 Maintenance table 14
5.2 Cleaning 14
5.2.1 Sample chamber 15
5.2.2 Heating module 15
5.2.3 Fan grill 18
5.2.4 Putting into operation after cleaning 18
5.3 Replacing the Dust filter 18

6 Troubleshooting 18
6.1 Malfunctions during initial application 18

7 Technical Data 20
7.1 General data 20

8 Disposal 22

1 Introduction

Thank you for choosing a METTLER TOLEDO instrument. The instrument combines high performance with ease of use.

EULA

The software in this product is licensed under the METTLER TOLEDO End User License Agreement (EULA) for Software.

▶ www.mt.com/EULA

When using this product you agree to the terms of the EULA.

Software version

This document is based on the software version V2.40 / V3.10.

1.1 Further documents and information

This document is available in other languages online.

▶ www.mt.com/moisture

▶ http://www.mt.com/moisture-software

Search for documents ▶ www.mt.com/library

For further questions, please contact your authorized METTLER TOLEDO dealer or service representative.

▶ www.mt.com/contact

1.2 Compliance information

National approval documents, e.g., the FCC Supplier Declaration of Conformity, are available online and/or included in the packaging.

▶ http://www.mt.com/ComplianceSearch

For further information, consult the Reference Manual (RM).

▶ www.mt.com/HX204-RM

2 Safety Information

Two documents named "User Manual" and "Reference Manual" are available for this instrument.

- The User Manual is printed and delivered with the instrument.
- The electronic Reference Manual contains a full description of the instrument and its use.
- Keep both documents for future reference.
- Include both documents if you transfer the instrument to other parties.

Only use the instrument according to the User Manual and the Reference Manual. If you do not use the instrument according to these documents or if the instrument is modified, the safety of the instrument may be impaired and Mettler-Toledo GmbH assumes no liability.

2.1 Further applicable documents

This User Manual is a brief instruction that provides information to handle with the first steps of the instrument in a safe and efficient manner. Personnel must have carefully read and understood this manual before performing any tasks.

For full information, always consult and download the Reference Manual (RM).

▶ www.mt.com/HX204-RM

Search for software

▶ http://www.mt.com/moisture-software

2.2 Definition of signal warnings and symbols

Safety notes contain important information on safety issues. Ignoring the safety notes may lead to personal injury, damage to the instrument, malfunctions and false results. Safety notes are marked with the following signal words and warning symbols:

Signal words

WARNING	A hazardous situation with medium risk, possibly resulting in death or severe injury if not avoided.
CAUTION	A hazardous situation with low risk, resulting in minor or moderate injury if not avoided.
NOTICE	A hazardous situation with low risk, resulting in damage to the instrument, other material damage, malfunctions and erroneous results, or loss of data.

Warning symbols

General hazard: read the User Manual or the Reference Manual for information about the hazards and the resulting measures.

Hot surface

Notice

2.3 Product specific safety information

Intended use

This instrument is designed to be used by trained staff. The instrument is intended for determining the weight loss during drying of samples.

Any other type of use and operation beyond the limits of use stated by Mettler-Toledo GmbH without consent from Mettler-Toledo GmbH is considered as not intended.

Moisture determination applications must be optimized and validated by the user according to local regulations. Application-specific data provided by METTLER TOLEDO is intended for guidance only.

Responsibilities of the instrument owner

The instrument owner is the person holding the legal title to the instrument and who uses the instrument or authorizes any person to use it, or the person who is deemed by law to be the operator of the instrument. The instrument owner is responsible for the safety of all users of the instrument and third parties.

METTLER TOLEDO assumes that the instrument owner trains users to safely use the instrument in their workplace and deal with potential hazards. METTLER TOLEDO assumes that the instrument owner provides the necessary protective gear.

Personal protective equipment

Insulated gloves

Lab coat

Goggles

⚠ WARNING

Death or serious injury due to electric shock

Contact with parts that carry a live current can lead to injury and death. If the instrument cannot be shut down in an emergency situation, people can be injured and the instrument can be damaged.

1 Check that the voltage printed on the instrument is the same as your local power supply voltage. If this is not the case, under no circumstances connect the instrument to the power supply, but contact a METTLER TOLEDO representative.
2 Only use the three-core power cable with equipment grounding conductor supplied by METTLER TOLEDO to connect your instrument.
3 Only connect it to a three-pin power socket with earthing contact.
4 Only use standardized extension cables with equipment grounding conductor for operating the instrument.
5 Make sure that the power plug is accessible at all times.
6 Arrange the cables so that they cannot be damaged or interfere with the operation.
7 Keep all electrical cables and connections away from liquids.

⚠ WARNING

Injury or death due to toxic or corrosive substances

Heating up toxic or corrosive substances, e.g., acids, can result in toxic or corrosive vapors that can cause injuries if they come in contact with the skin or the eyes or if they are inhaled.

1 When using chemicals and solvents, comply with the instructions of the manufacturer and the general laboratory safety rules.
2 Set up the instrument in a well-ventilated location.
3 When using dry substances that form toxic gases, place the instrument in a fume hood.

⚠ WARNING

Death or serious injuries due to flammable solvents

Flammable solvents in the vicinity of the instrument can ignite and lead to fire and explosions.

1 Keep flammable solvents away from the instrument.
2 When using chemicals and solvents, comply with the instructions of the manufacturer and the general laboratory safety rules.

⚠ CAUTION

Burns due to hot surfaces

During operation, parts of the instrument can reach temperatures that can cause burns if touched.

1 Do not touch the area marked with the warning symbol.
2 Ensure sufficient free space around the instrument to avoid heat accumulation and overheating (approx. 1 m free space above the heating module).
3 Never cover, tape or clog the vent over the sample chamber. Do not tamper with the vent in any other way.
4 Exercise caution when removing a sample. The sample itself, the sample chamber, the draft shield and the sample pan may be very hot.
5 Do not open the heating module during operation. Always let it cool down completely before opening.
6 Do not modify the heating module in any way.

NOTICE

Damage to the instrument due to corrosive substances and vapors

Corrosive substances and corrosive vapors can damage the instrument.

1 When using chemicals and solvents, comply with the instructions of the manufacturer and the general laboratory safety rules.
2 Ensure that the instrument parts touching your sample substance can not get altered by it.
3 Wipe off any condensation of corrosive vapours after an operation.
4 Work with small samples.

NOTICE

Damage to the instrument due to the use of unsuitable parts

Using unsuitable parts with the instrument can damage the instrument or cause it to malfunction.

– Only use parts from METTLER TOLEDO that are intended to be used with your instrument.

For related information concerning the QuickPredict function, **see** Prerequisites to use QuickPredict for a method.

3 Design and Function

3.1 Operation Keys

Key	Designation	Description
⏻	ON/OFF	Switches the Moisture Analyzer on / into standby mode (to switch it off completely, it has to be unplugged from the power supply).
⌂	Home	Directly returns to the home screen from any other menu level.
↕	Open/Close the sample chamber	Opens and closes the sample chamber.

3.2 Screen navigation

The colored touch screen is a touch-sensitive WVGA monitor. It displays information and allows you to enter commands by touching certain areas on its surface: You can choose the information displayed on the screen, change terminal settings or perform certain operations on the instrument.

Only those elements which are available for the current dialog appear on the display.

NOTICE

Damage to the touch screen due to pointed or sharp objects

– Operate the touch screen with your fingers.

Note

The sensitivity of the touch screen is set to a default value. The sensitivity of the touch screen can be defined with the function **Touch screen adjustment** in the section **Settings**.

The surface navigation of the touch screen works in the same way as on most common touch screens:

Selecting a button or an icon

– Tap on it.

Scrolling

– Drag the button in the scroll bar up or down.
– Or tap ▲ or ▼

3.3 Home Screen

The user **Home** screen is the main screen and appears after startup or login of the instrument. All sections of the user interface can be accessed from the home screen. Returning to the **Home** screen is possible from all other screens of the user interface by pressing the [⌂] key or tapping the [**Home**] button.

	Name	Explanation
1	**Main Menu**	**Measurement** Start measurement. Prerequisite: Method is defined and all necessary settings are made.
		Results Display, print and export results
		Method Definition Define, edit, test or delete a method
		Test/Adjust Adjust or test the integrated balance and the heating module and perform SmartCal tests.
		Settings Define instrument-, user-, and data-management settings. Find help and tutorials under this menu item.
2	**User shortcuts**	Shows user-specific shortcuts for frequently used methods. Shortcuts are saved in the user profile.
3	**Instrument info**	Shows general info about the instrument and the software (e.g. serial number, software version).

3.4 Work Screen

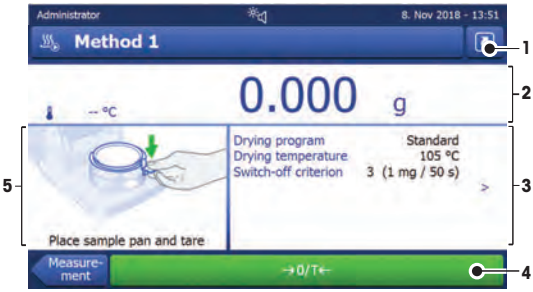

	Name	Explanation
1	**Shortcut button**	Adding/editing a shortcut to the current method (to the home screen).
2	**Value panel**	Current measured (or predicted) values of the work process.
3	**Parameter panel**	Parameters of the current work process. A detailed overview of the method parameters appears after tapping the parameter panel. Identifications (IDs) appear after tapping the ID panel for entering or editing values (comments). ID panel appears only if identification input is activated in the menu.
4	**Action buttons**	Action buttons which are required and available for the current dialog (e.g. **Back**, **->0/T<-**, **Print**, **Save**, **Delete**, **OK**).
5	**Graphics panel**	Graphical illustrations, e.g. of the drying curves, instructions for the user for performing tasks, and weighing-in aid.

4 Installation and Putting into Operation

4.1 Selecting the location

Requirements of the location

Place indoors on stable table

Ensure sufficient spacing

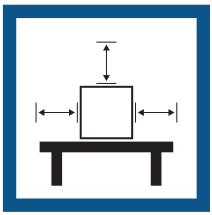

Level the instrument

Provide adequate lighting

Avoid direct sunlight

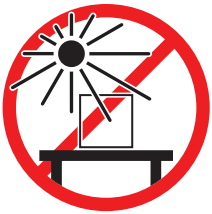

Avoid vibrations

Avoid strong drafts

Avoid temperature fluctuations

Sufficient distance for Moisture Analyzers: > 15 cm next to the instrument, > 1 m above the heating module.

4.2 Unpacking

Note

Store all parts of the packaging. This packaging guarantees the best possible protection for the transport of your instrument.

After receiving the instrument, proceed as follows:

1 Open the package and remove drying unit, terminal and the accessories.
2 Remove the packaging from the instrument.
3 Check the Moisture Analyzer for transport damage and complete scope of delivery.
4 In the event of damage or missing accessories, immediately inform a METTLER TOLEDO representative.

4.3 Scope of delivery

Moisture Analyzer	Documentation	Accessories
• 1 Drying unit • 1 Draft shield • 1 Power cable • 1 Terminal cable • 1 Sample handler • 1 Sample pan holder	• 1 User Manual • 1 Application brochure «Guide to Moisture Analysis» • 1 Production certificate • 1 Voucher for E-learning "Proper Moisture Determination" • EU-countries: 1 CE declaration of conformity	• 80 aluminium sample pans • 3 Specimen samples (glass fibre filter) • 1 SmartCal sampler • Specific countries: 1 Wifi dongle

4.4 Connecting the instrument

⚠ WARNING

Death or serious injury due to electric shock

Contact with parts that carry a live current can lead to injury and death. If the instrument cannot be shut down in an emergency situation, people can be injured and the instrument can be damaged.

1 Check that the voltage printed on the instrument is the same as your local power supply voltage. If this is not the case, under no circumstances connect the instrument to the power supply, but contact a METTLER TOLEDO representative.
2 Only use the three-core power cable with equipment grounding conductor supplied by METTLER TOLEDO to connect your instrument.
3 Only connect it to a three-pin power socket with earthing contact.
4 Only use standardized extension cables with equipment grounding conductor for operating the instrument.
5 Make sure that the power plug is accessible at all times.
6 Arrange the cables so that they cannot be damaged or interfere with the operation.
7 Keep all electrical cables and connections away from liquids.

Two different versions of drying units with country-specific power cable are available:

110 V AC or 230 V AC

Connecting the terminal to the drying unit

- Drying unit and terminal are at the final location.

1 Connect one end of the supplied terminal cable to the system connection socket on the terminal.
2 Screw the connector firmly.
3 Connect the other end to the system connection socket on the drying unit.
4 Screw the connector firmly.

Connecting the drying unit to the power supply

- The terminal is connected to the drying unit.

1 Connect one end of the power cable to the power supply socket on the drying unit.
2 Connect the other end to the power line outlet.

See also

Overview terminal ▸ Page 5
Overview drying unit ▸ Page 4

4.5 Opening and closing sample chamber

NOTICE

Damage to the instrument due to manual opening

Opening the sample chamber manually can damage the opening function and hinges of the instrument.

1 In ordinary situations, always use the key [↕] to open and close the sample chamber
2 Only use the opening handles on the heating module in case of an emergency.

Regular opening

In ordinary situations, open and close the sample chamber by pressing the key [↕].

Emergency opening

In case of an emergency:

1 Grab the handles on the heating module with both hands and pull the module firmly upwards to open the sample chamber.
2 After a manual emergency opening, always reboot the system and check for damage to the instrument or opening function.

4.6 Setting up the instrument

- Terminal and drying unit are connected.
- The instrument is connected to the power supply.

1 Switch on the Instrument by pressing [⏻].
2 Press [↕].
   ⇨ The motorized automatic sample chamber opens.
3 Place the draft shield element. Only one position is possible.
4 Insert the sample pan holder carefully. Check that the sample pan holder is hooked correctly.

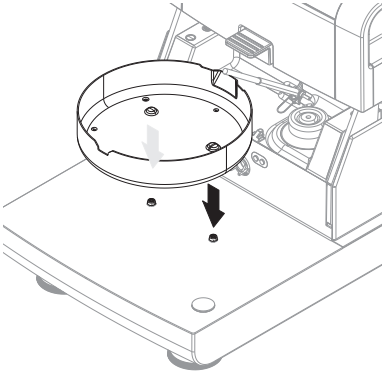

5 Insert the sample pan handler.

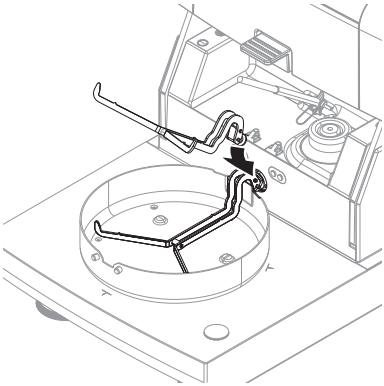

4.7 Leveling the instrument

Exact horizontal positioning and stable installation are prerequisites for repeatable and accurate results. To compensate for small irregularities or inclinations (±2%) at the location, the instrument must be leveled.

Note

For leveling the drying unit use the function **Leveling guide** that can be found on **Settings** > **Help and tutorials** > **Instrument tutorial** > **1. Leveling the instrument**.

For exact horizontal positioning, the drying unit has a level indicator (level) and 2 leveling screws. When the air bubble in the level indicator is exactly in the center, the instrument is standing perfectly horizontally. To level it, proceed as follows:

1 Position your Moisture Analyzer at the selected location.
2 Turn the two leveling feet until the air bubble is in the center of the level indicator.

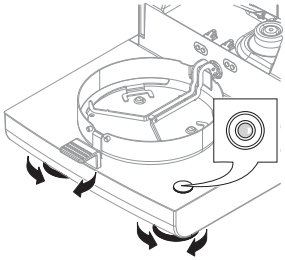

L = left foot
R = right foot

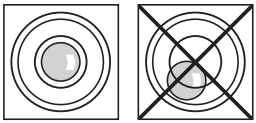

Air bubble at 12 o'clock:

turn both feet clockwise.

Air bubble at 3 o'clock:

turn left foot clockwise, right foot counter-clockwise.

Air bubble at 6 o'clock:

turn both feet counterclockwise.

Air bubble at 9 o'clock:

turn left foot counterclockwise, right foot clockwise.

Leveling the drying unit with optional stand for terminal mounted.

- The drying unit is positioned at the selected location.

1 To loose the clamps for the safety feet of the stand, turn them outwards.
2 Level the drying unit as previously described.
3 To lock the clamps for the safety feet, turn them inwards as far as they will go.

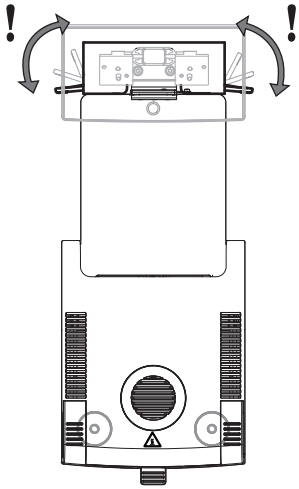

Level sensor

The built-in level sensor constantly monitors the correct horizontal alignment of the drying unit. When the level is incorrect, the status icon appears in the display, **see** Status Message Icons.

Note
The level sensor cannot be switched off.

4.8 Setting date and time

Navigation: Home > **Settings** > **Instrument settings** > **Regional Settings**

When you put your new instrument into operation for the first time, you should enter the current date and time. These settings are retained even if you disconnect your instrument from the power supply.

Note
Various languages are available for the dialog with your instrument and can be selected in the menu: **Navigation: Settings** > **User preferences**.

Set the current date

- **Regional Settings** is selected.

1 Tap **Date**.
2 Set day, month and year.
3 Confirm with [**Set date**].

Set the current time

- **Regional Settings** is selected.

1 Tap **Time**.
2 Set Hours and minutes.
3 Confirm with [**Set time**].

4.9 Adjustments

To obtain accurate measuring results, it is necessary to adjust the integrated balance as well as the heating module.

Adjusting is necessary:

- before the instrument is used for the first time.
- at regular intervals.

- after a change of location.

The following adjustment options are possible:

- Fully automatic balance adjustment FACT
- Balance adjustment with internal weight
- Balance adjustment with external weight
- Temperature adjustment with temperature kit
- To verify the overall performance of the moisture analyzer after the aforementioned adjustments, perform a SmartCal test.

For more information to perform these operations **see**

▶ www.mt.com/HX204-RM

4.10 Transporting, packaging and storing

4.10.1 Transporting the Moisture Analyzer

Transporting the Moisture Analyzer over short distances

1 Switch off the instrument and unplug all interface cables.
2 Hold the instrument with both hands as shown.
3 Carefully lift the instrument and carry it in horizontal position to the new location.

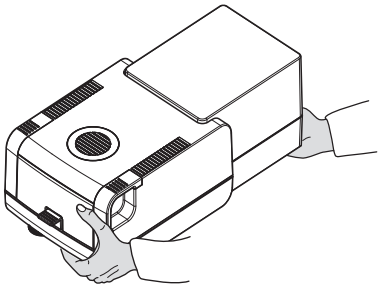

Transporting the Moisture Analyzer over long distances

For transporting the Moisture Analyzer over long distances, always use the original packaging or the designated transport case (**see** "Accessories").

4.10.2 Putting into operation after transport

Putting into operation after transport:

1 Connect drying unit and terminal.
2 Check the level status. Level the Moisture Analyzer if necessary.
3 METTLER TOLEDO recommends to perform weight and temperature tests and, if necessary, adjustments after transporting the Moisture Analyzer.

⇨ The Moisture Analyzer has been put into operation and is ready to use.

See also

🗎 Connecting the instrument ▸ Page 9
🗎 Setting up the instrument ▸ Page 10

4.10.3 Packaging and storing

Packaging

Store all parts of packaging in a safe place. The elements of the original packaging are developed specifically for the Moisture Analyzer and its components to ensure optimal protection during transportation or storing.

Storing

Store the Moisture Analyzer under following conditions:

- Indoor and in the original packaging.

- According to the environmental condition, see "Technical data".

Note

When storing for longer than six months, the rechargeable battery may be down (date and time get lost).

5 Maintenance

To guarantee the functionality of the Moisture Analyzer and the accuracy of the results, a number of maintenance actions must be performed by the user.

5.1 Maintenance table

Maintenance action	Recommended interval	Remarks
Cleaning	Depending on the degree of pollution or your internal regulations clean the instrument: • After every use • After change of sample	**see** chapter "Cleaning"
Performing routine tests (Weight test, temperature test, SmartCal test)	• After cleaning • After a software update	**see** chapter "Test"
Performing adjustments (weight adjustment, temperature adjustment)	• After changing the location • If a test indicates that an adjustment is needed	**see** chapter "Adjustments"
Replacing the dust filter (if used)	• Depending on the degree of pollution	**see** chapter "Dust filter"

For further information, consult the Reference Manual (RM).

5.2 Cleaning

⚠ WARNING

Death or serious injury due to electric shock

Contact with parts that carry a live current can lead to injury and death. If the instrument cannot be shut down in an emergency situation, people can be injured or the instrument can be damaged.

– Disconnect the instrument from the power supply before cleaning or performing other maintenance work.

⚠ CAUTION

Burns due to hot surfaces

The interior parts of the heating module as well as the parts in the sample chamber can reach temperatures that can cause injuries if touched.

– Wait until the heating module has cooled down completely before performing any maintenance task.

NOTICE

Damage to the instrument due to inappropriate cleaning agents

Inappropriate cleaning agents can damage the housing. If liquids enter the housing they can damage the instrument.

1 Make sure the cleaning agent is compatible with the material of the part you want to clean.
2 Make sure that no liquid enters the interior of the instrument. Do not spray any liquids and wipe off any spills immediately.
3 Use a lint-free cloth for cleaning.
4 Never open the housing of the instrument.

Protective equipment:

- Gloves
- Goggles

5.2.1 Sample chamber

- Sample chamber is open.

1 Remove the sample pan handler (**1**), the sample pan holder (**2**) and the draft shield (**3**) for cleaning.
2 Carefully remove any deposits from the black temperature sensor (**4**).

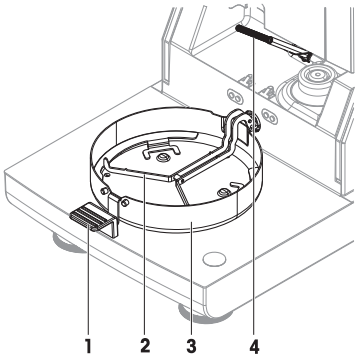

5.2.2 Heating module

⚠ CAUTION

Burns due to hot surfaces

The round halogen lamp can reach temperatures that can cause injuries if touched.

1 Do not remove the halogen lamp.
2 Wait until the heating module has cooled down completely before cleaning.
3 Remove any splashes, deposits, or spots from the halogen lamp with a mild organic solvent such as ethanol.

Overview

1 Protective glass
2 Reflector with inspection window glass
3 Halogen lamp

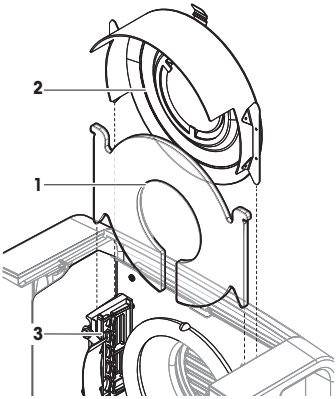

Opening heating module for cleaning

- Sample chamber is open.

1 Inside, there is a locking device on each side. Push both outwards (together) for unlocking (1). Do not hold the module while unlocking it.
   ⇨ The upper part has been unlocked on both sides.
2 Open the heating module (2).

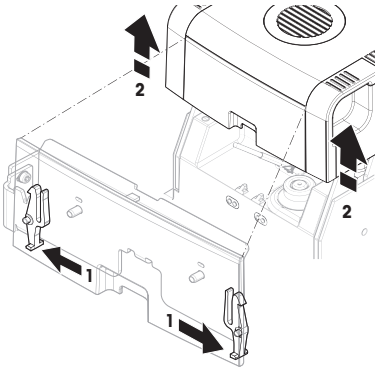

Removing reflector with inspection window glass for cleaning

1 To unlock, pull the spring clip (1) forwards.

2 Pull out the reflector (2) upwards off the bracket.

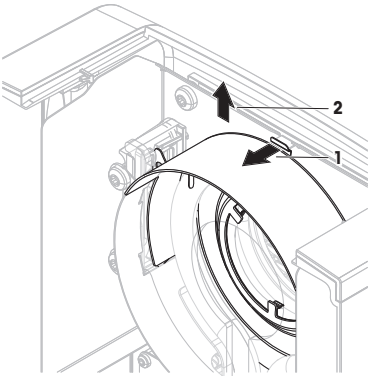

Removing protective glass for cleaning

- Reflector is removed.

– Pull out the protection glass upwards off the bracket.

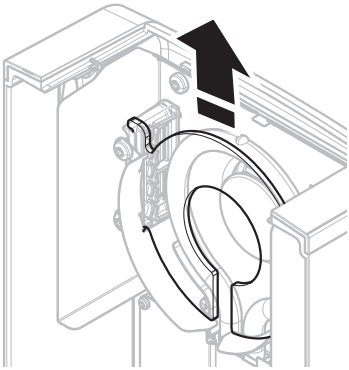

Reassembling after cleaning

- All parts are cleaned.

1 Insert the protective glass (1).
2 Insert the reflector with inspection window glass (2) (until it clicks). The lamp must be located in front of the reflector. Do not touch the lamp with your fingers.
3 Close the heating module (until it clicks).

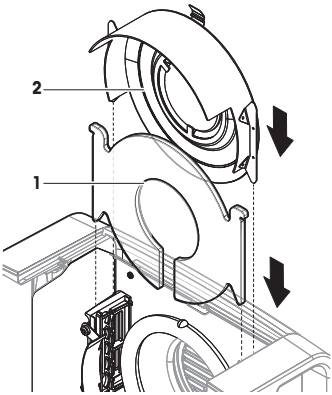

5.2.3 Fan grill

The air inlet of the fan is located at the rear of the instrument and its exterior should be cleaned from time to time to free it from any dust deposits.

5.2.4 Putting into operation after cleaning

1 Reassemble the Moisture Analyzer.
2 Press ⏻ to switch on the Moisture Analyzer.
3 Warm up the Moisture Analyzer. Wait 1h for the acclimatization, before starting the tests.
4 Check the level status, level the Moisture Analyzer if necessary.
5 METTLER TOLEDO recommends to perform weight and temperature tests and, if necessary, adjustments after cleaning the Moisture Analyzer.
⇨ The Moisture Analyzer has been put into operation and is ready to use.

5.3 Replacing the Dust filter

If you use a dust filter for your Moisture Analyzer, check the filter pollution at regular intervals. For replacement filters **see** Accessories and Spare Parts.

1 Open the filter lid.
2 Replace the dust filter.

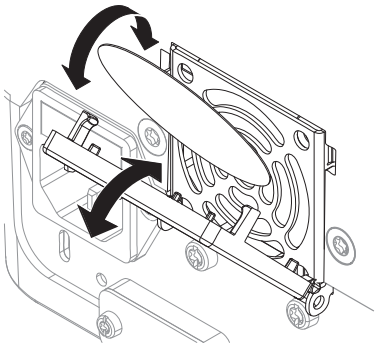

6 Troubleshooting

For further information, consult the Reference Manual (RM).

6.1 Malfunctions during initial application

Malfunction	Possible cause	Diagnostic	Remedy
Moisture analyzer cannot be switched on.	• The power supply cable is not connected. • The cable between the terminal and the drying unit is not connected. • No power supply voltage in the mains.	Check.	Connect the power supply cable, the terminal cable or reestablish the mains supply voltage.

Malfunction	Possible cause	Diagnostic	Remedy
	Faulty fuse.	Check.	Replace the fuse. The fuse is located on the back of the instrument besides the power plug (find a spare fuse there).
Keys and buttons on the terminal do not function.	Software bug.	–	Restart the software by disconnecting and reconnecting the power plug.
Unstable weight indication. The measuring values do not stabilize but go up/ down.	The sample pan holder is not placed properly .	Check.	Make sure the sample pan holder is correctly placed.
			Some parts are touching the sample pan.
			Volatile sample substance (weight of the sample changes quickly).
The measurement takes too long.	An unsuitable switch-off criterion was set.	–	Choose a suitable switch-off criterion.
	Sample substance tends to form a skin, when heated.	–	If you use samples which tend to form a skin that hinders evaporation, perform the measurement at a higher temperature.
	An excessive amount of sample cause slow drying.	–	Enlarge the surface of the sample substance, e.g by crushing or grinding.
	Liquids take longer to dry.	–	For sample liquids, use absorbent glass fibre filters.
			Use absorbent glass filter for liquids.
			Enlarge the surface of the sample, e.g. by crushing or grinding.
Measurement results are not repeatable.	Unstable environment/ location of the instrument.	–	Choose a suitable location, **see** "Selecting the location".
			The drying time is too short for the "Timed switch-off" criterion.
	The sample substance boils and the splashed drops continuously change the weight.	–	Lower the drying temperature.
			The samples are not comparable.
	The granulation of the sample is not homogenous or too large.	–	Use samples with a homogenous granulation.
	Insufficient heating power because the protective glass of the halogen radiator is dirty.	Check if the protective glass is dirty.	Clean the protective glass, **see** "Cleaning".
	The temperature sensor is contaminated/dirty.	Check if the temperature sensor is dirty.	Clean the temperature sensor, **see** "Cleaning".

Malfunction	Possible cause	Diagnostic	Remedy
	The sample substance does not become completely dry due to uneven distribution in the sample pan.	–	Evenly spread the sample substance in the pan and retry.
The difference between target and actual temperature is out of tolerance. When using the temperature adjustment kit.	The temperature adjustment kit is not adjusted or defective.	–	• Try another temperature adjustment kit. • Adjust the temperature adjustment kit (contact your METTLER TOLEDO service representative)
The adjustment temperature is lower than expected (e.g. 90°C instead of 100°C).	The draft shield is not installed.	Check.	Install the draft shield.

7 Technical Data

7.1 General data

Power supply

110 V AC Version	100 V–120 V, 50/60 Hz, 4 A
230 V AC Version	200 V–240 V, 50/60 Hz, 2 A
Voltage fluctuations	-15%+10%
Power load	max. 450 W during drying process
Power line fuse	5 x 20 mm, T6.3 AH 250 V (6.3 A, time-lag T, high breaking capacity)

Protection and standards

Overvoltage category	II
Degree of pollution	2
Standards for safety and EMC	see Declaration of Conformity (part of standard equipment)
Range of application	for use in dry interior rooms

Environmental conditions

Height above sea level	up to 4000 m
Ambient temperature range	Operation: +10 °C to 30 °C (operability guaranteed 5 °C to 40 °C)
Relative air humidity	max. 80% up to 31 °C, linearly decreasing to 50% at 40 °C 20% - 80% and non-condensing conditions
Warm-up time	At least 60 minutes after connecting the instrument to the power supply; when switched on from standby, the instrument is ready for operation immediately.

Materials

Drying unit

Housing	Plastic, PBT, Crastin SO653-GB20
Inspection window grill	Plastic, PEEK-HT G22 (UL 94 V-0)
Protective glass	Glass ceramics
Halogen lamp	Quartz glass

Reflector	Stainless steel, X2CrNiMo17-2 (1.4404)
Reflector bracket	Plastic, PEEK-HT G22 (UL 94 V-0)
Draft shield, interior bottom plate	Stainless steel, X2CrNiMo17-2 (1.4404)
Terminal	
Top housing	EN ZL-ZnAl4Cu1 (EN ZI-0410)
Bottom housing	PA12 GB30

8 Disposal

In conformance with the European Directive 2012/19/EU on Waste Electrical and Electronic Equipment (WEEE) this device may not be disposed of in domestic waste. This also applies to countries outside the EU, per their specific requirements.

Please dispose of this product in accordance with local regulations at the collecting point specified for electrical and electronic equipment. If you have any questions, please contact the responsible authority or the distributor from which you purchased this device. Should this device be passed on to other parties, the content of this regulation must also be related.

GWP®

Good Weighing Practice™

GWP® is the global weighing standard, ensuring consistent accuracy of weighing processes, applicable to all equipment from any manufacturer It helps to:

- Choose the appropriate balance or scale
- Calibrate and operate your weighing equipment with security
- Comply with quality and compliance standards in laboratory and manufacturing

www.mt.com/GWP

www.mt.com/hxhs

For more information

Mettler-Toledo GmbH
Im Langacher 44
8606 Greifensee, Switzerland
www.mt.com/contact

Subject to technical changes.
© Mettler-Toledo GmbH 01/2020
30357053F en

30357053