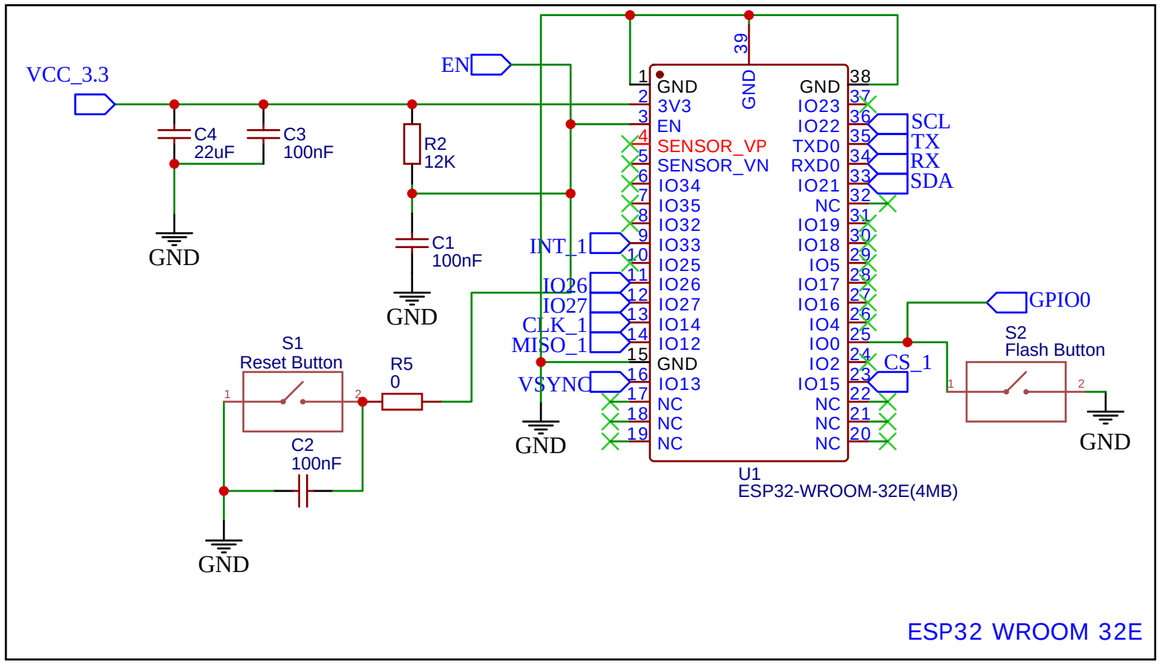

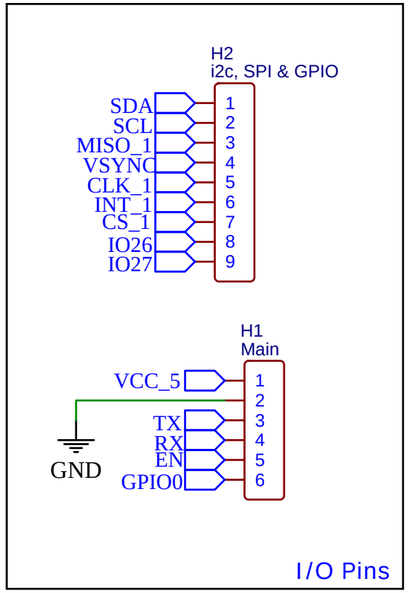

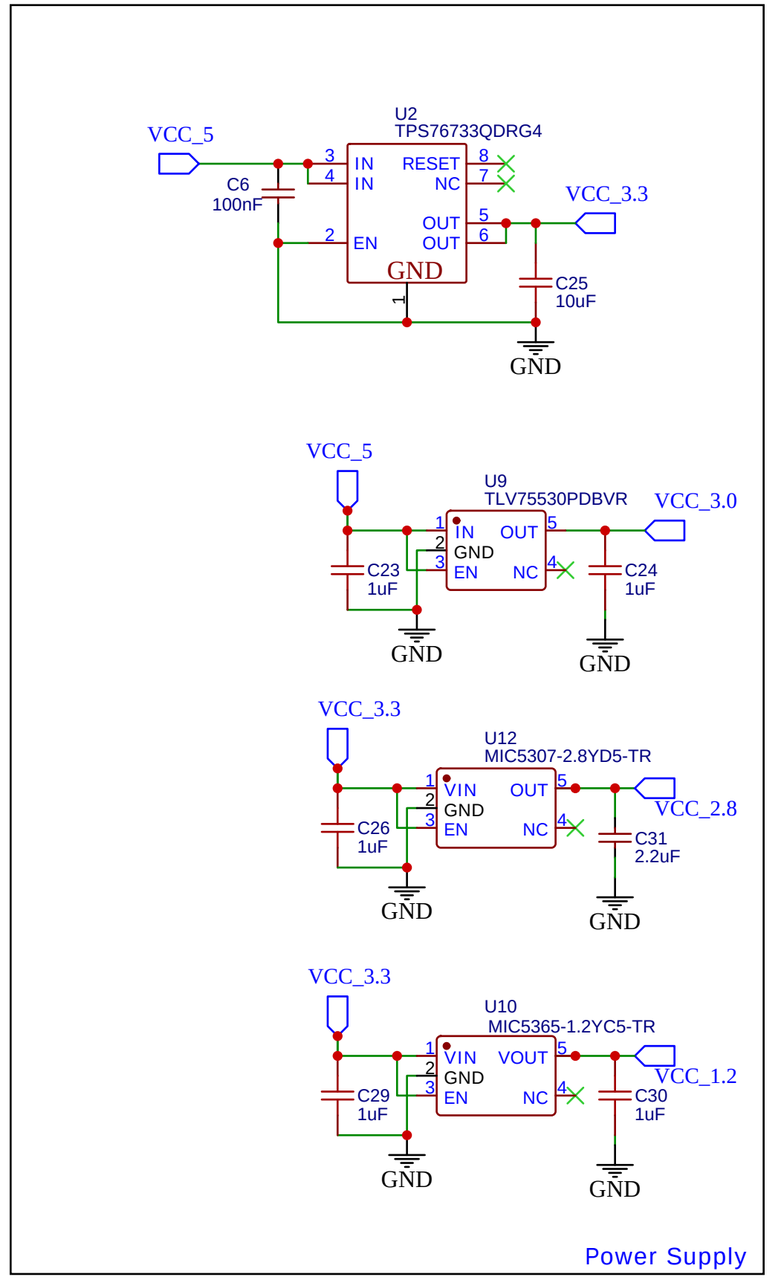

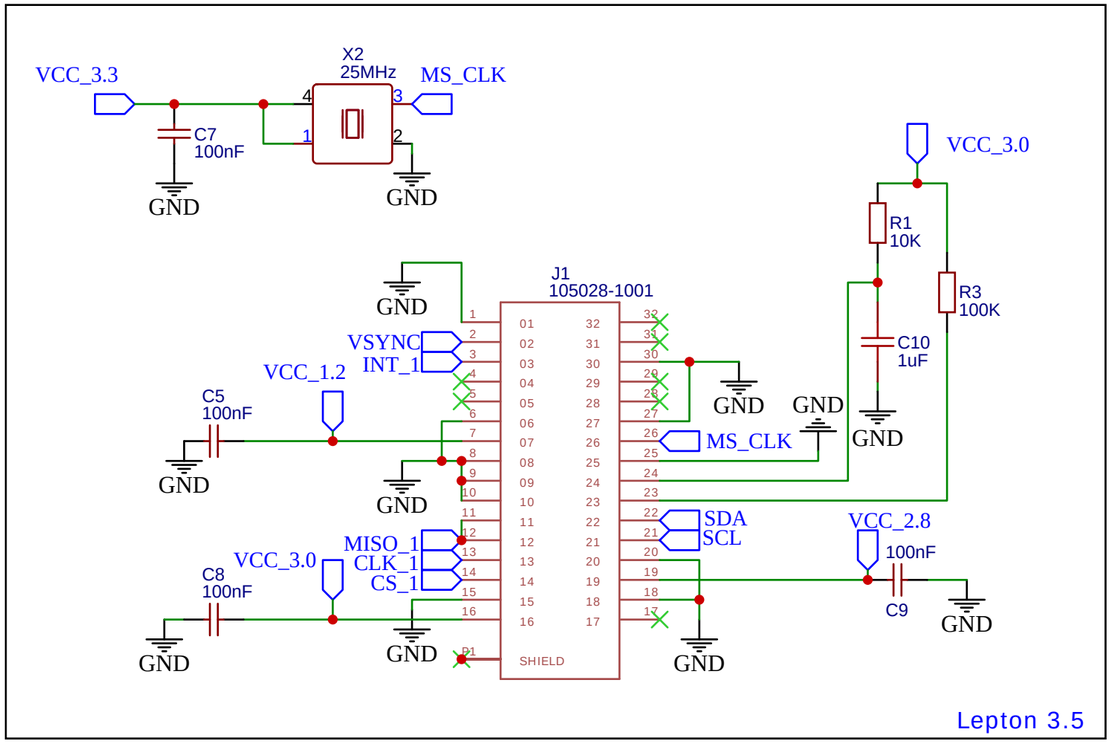

TITLE: Wet_Floor_Sensor	REV: 1.0
Company: FlamencoTech	Sheet: 1/1
Date: 2021-09-13 Drawn By: Dhinesh_R	