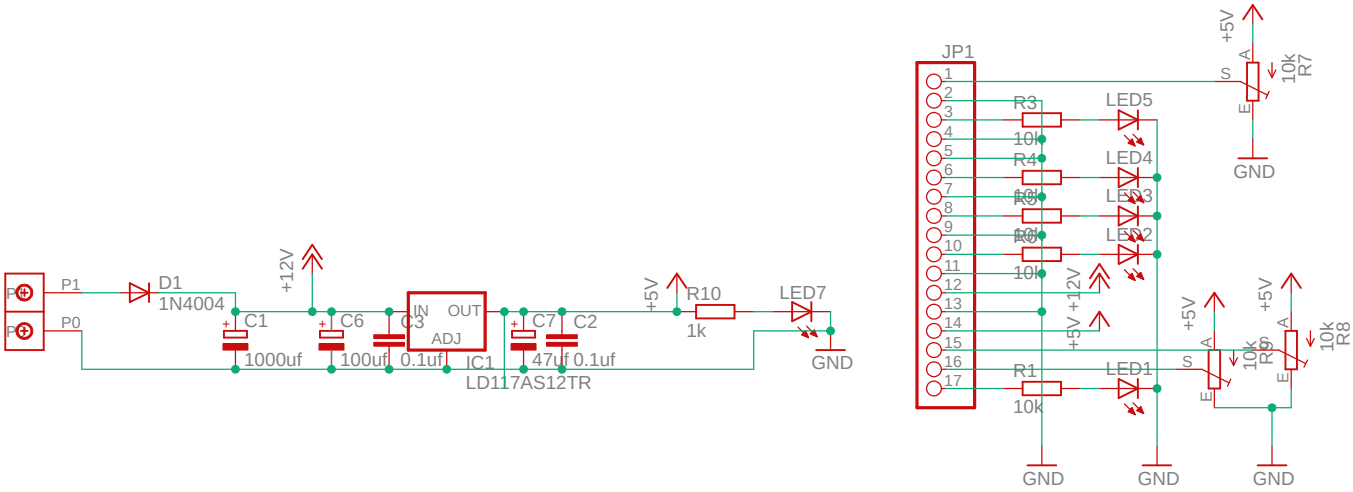
P1
P0
D1
1N4004
C1
1000uf
+12V
C6
100uf
C3
0.1uf
IN
OUT
ADJ
IC1
LD117AS12TR
C7
47uf
C2
0.1uf
+5V
R10
1k
LED7
GND
JP1
R3
10k
R4
10k
R1
10k
LED5
LED4
LED3
LED2
LED1
+5V +12V
GND
GND
GND
+5V
S
A
E
10k
R7
GND
+5V
10k
R9
+5V
10k
R8