Front

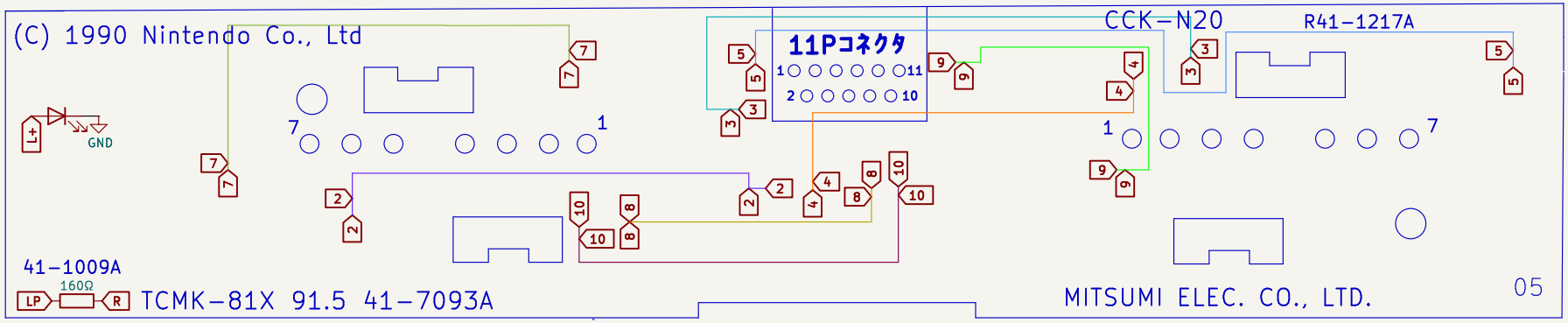

Back

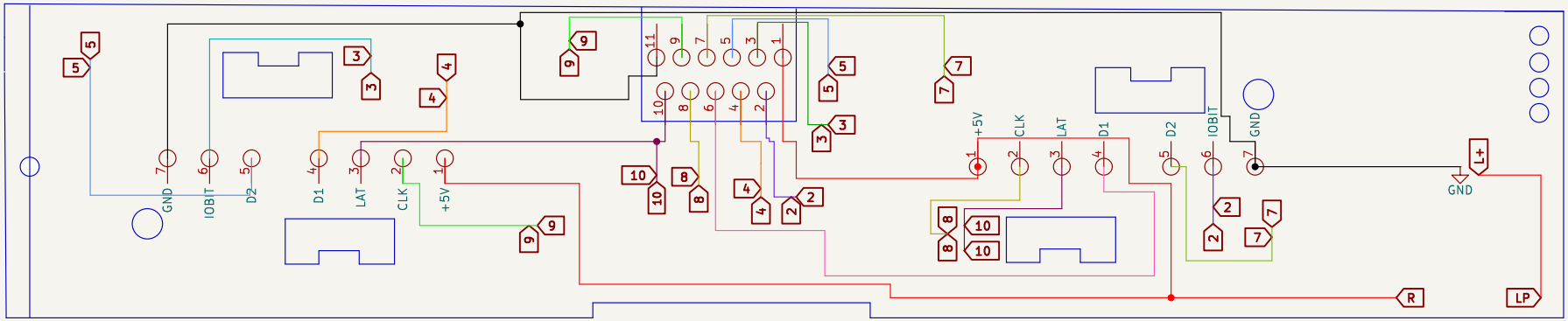

LEGEND:	PORT 1	PORT 2
VIA	CLK	CLK
POWER	D1	D1
GROUND	D2	D2
LAT	IOBIT	IOBIT

Used in SHVC-CPU-01 / GPM-01 / GPM-02 SNES Units
Originally Designed By Nintendo and Manufactured By Mitsumi.
Documented by starlightk7 for Repair Usage
This Document Is Not Endorsed By Nintendo or Mitsumi

License: CERN-OHL-S

Sheet: /
File: TCMK-81X CCK-N20.kicad_sch

Title: TCMK-81X CCK-N20 (SNES Input Board)

Size: User	Date: 2025-07-31	**Rev: A**
KiCad E.D.A. 9.0.5		Id: 1/1