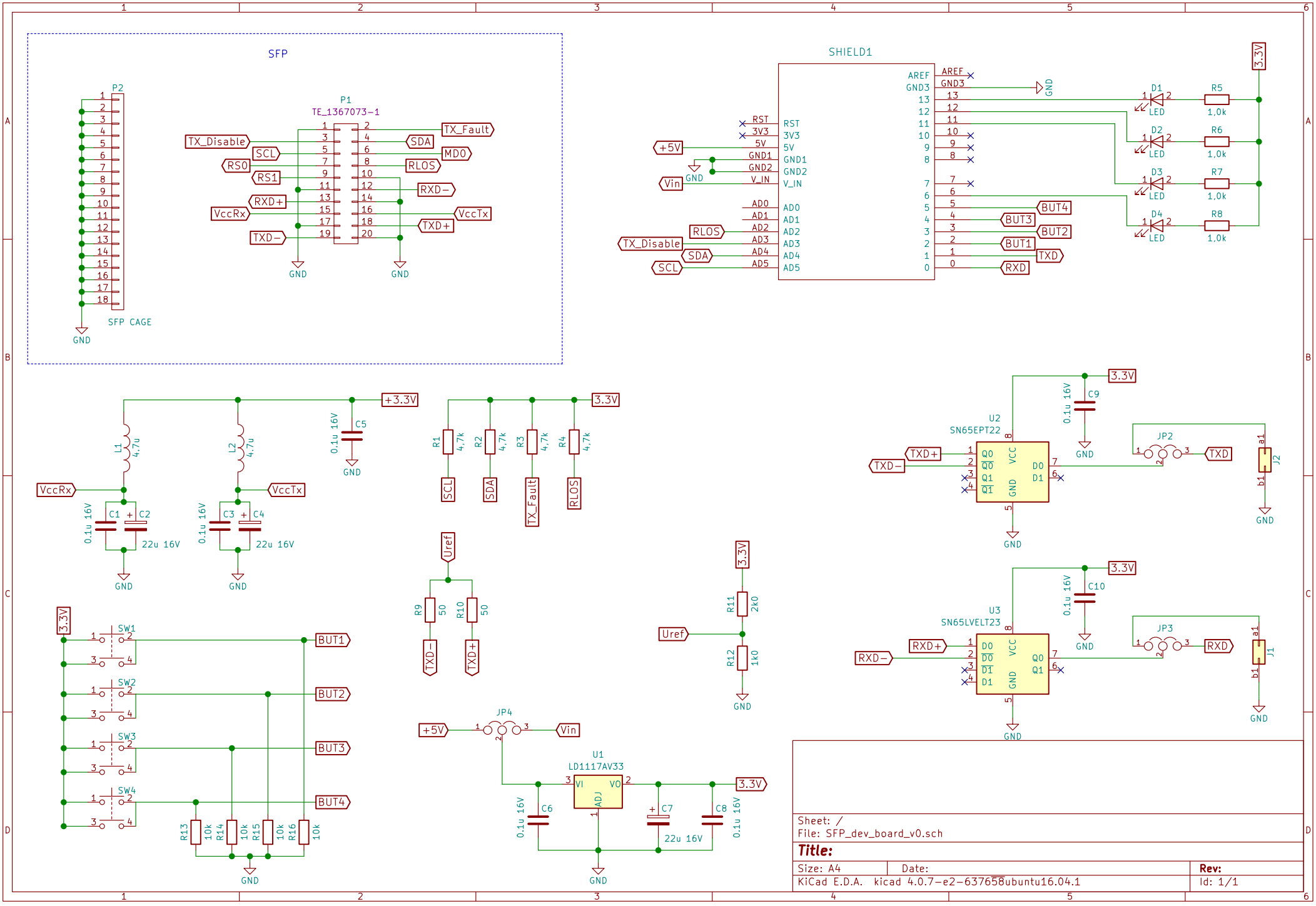
SFP
P2
SFP CAGE
P1
TE_1367073-1
TX_Disable
SCL
RS0
RS1
RXD+
VccRx
TXD-
TX_Fault
SDA
MD0
RLOS
RXD-
VccTx
TXD+
GND
SHIELD1
RST
3V3
5V
GND1
GND2
V_IN
AD0
AD1
AD2
AD3
AD4
AD5
AREF
GND3
+5V
Vin
BUT4
BUT3
BUT2
BUT1
TXD
RXD
D1
D2
D3
D4
LED
R5
R6
R7
R8
1,0k
3.3V
+3.3V
L1
L2
4,7u
C5
C1
C2
C3
C4
0.1u 16V
22u 16V
R1
R2
R3
R4
4,7k
Uref
R9
R10
50
R11
R12
2k0
1k0
JP4
U1
LD1117AV33
VI
VO
ADJ
C6
C7
C8
U2
SN65EPT22
U3
SN65LVELT23
C9
C10
JP2
JP3
J2
J1
a1
b1
SW1
SW2
SW3
SW4
R13
R14
R15
R16
10k
Sheet: /
File: SFP_dev_board_v0.sch
Title:
Size: A4
Date:
Rev:
KiCad E.D.A. kicad 4.0.7-e2-637658ubuntu16.04.1
Id: 1/1