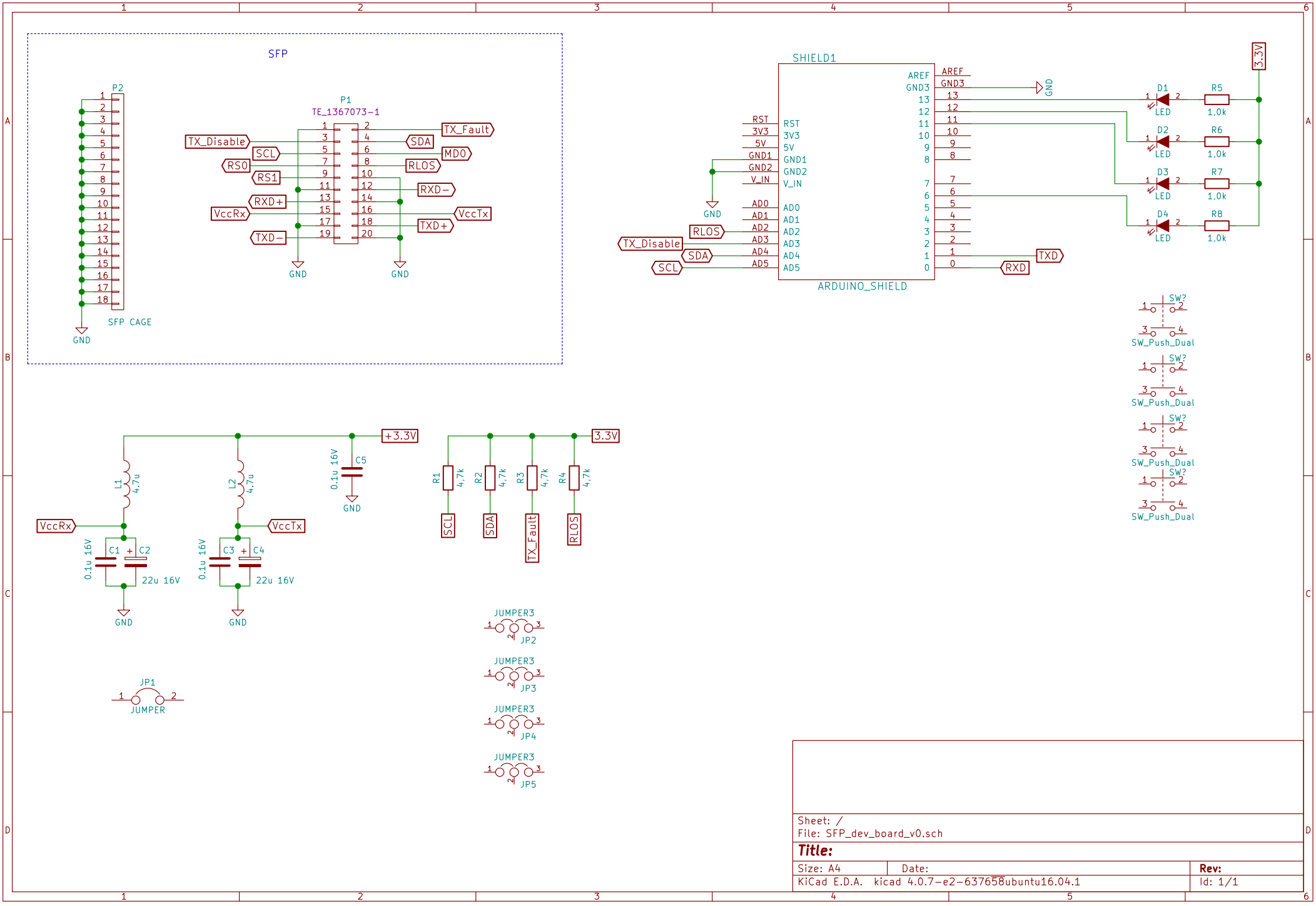

Sheet: /
File: SFP_dev_board_v0.sch

Title:

Size: A4	Date:	Rev:
KiCad E.D.A. kicad 4.0.7-e2-637658ubuntu16.04.1		Id: 1/1