logisim

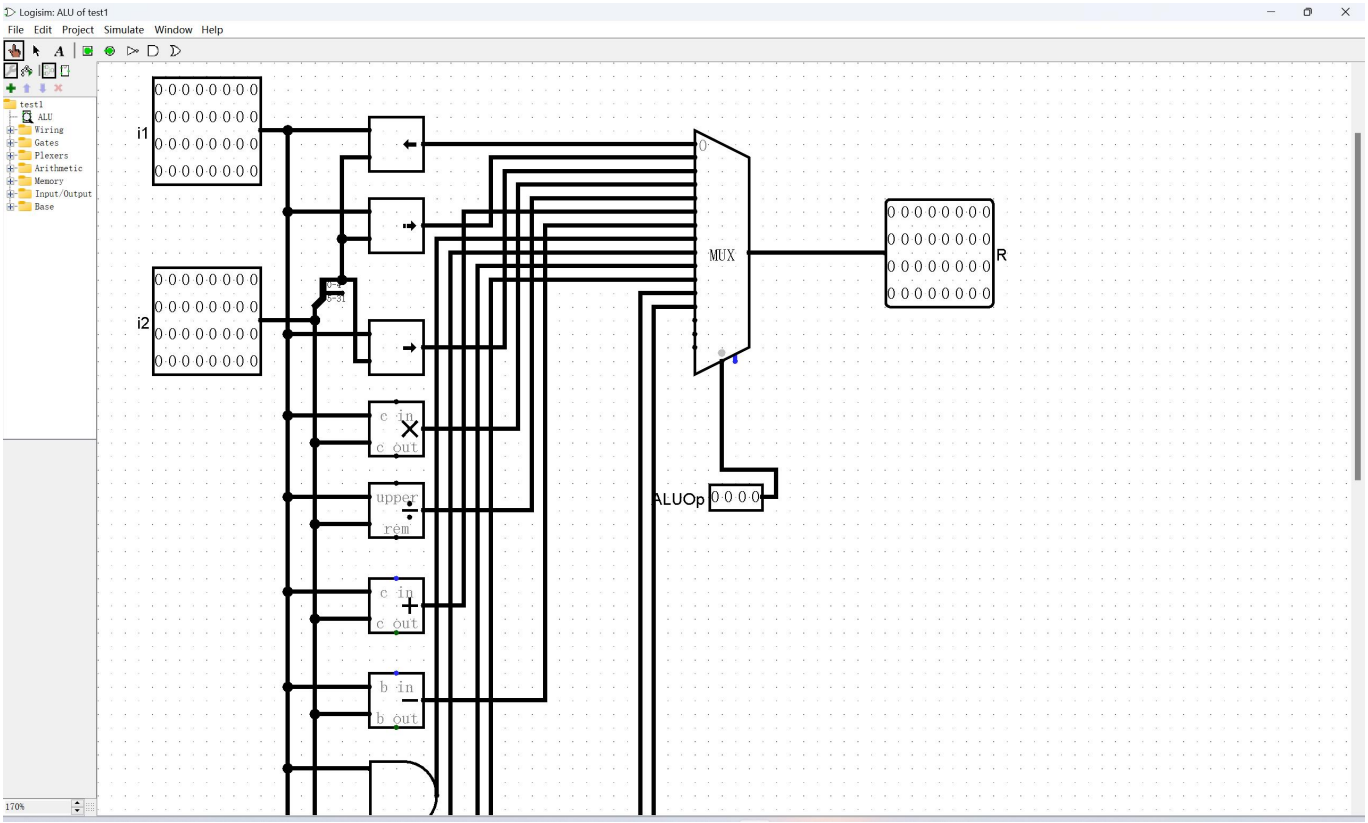
Logisim: ALU of test1
File Edit Project Simulate Window Help
i1
i2
MUX
R
ALUOp
c in
c out
upper
rem
b in
b out

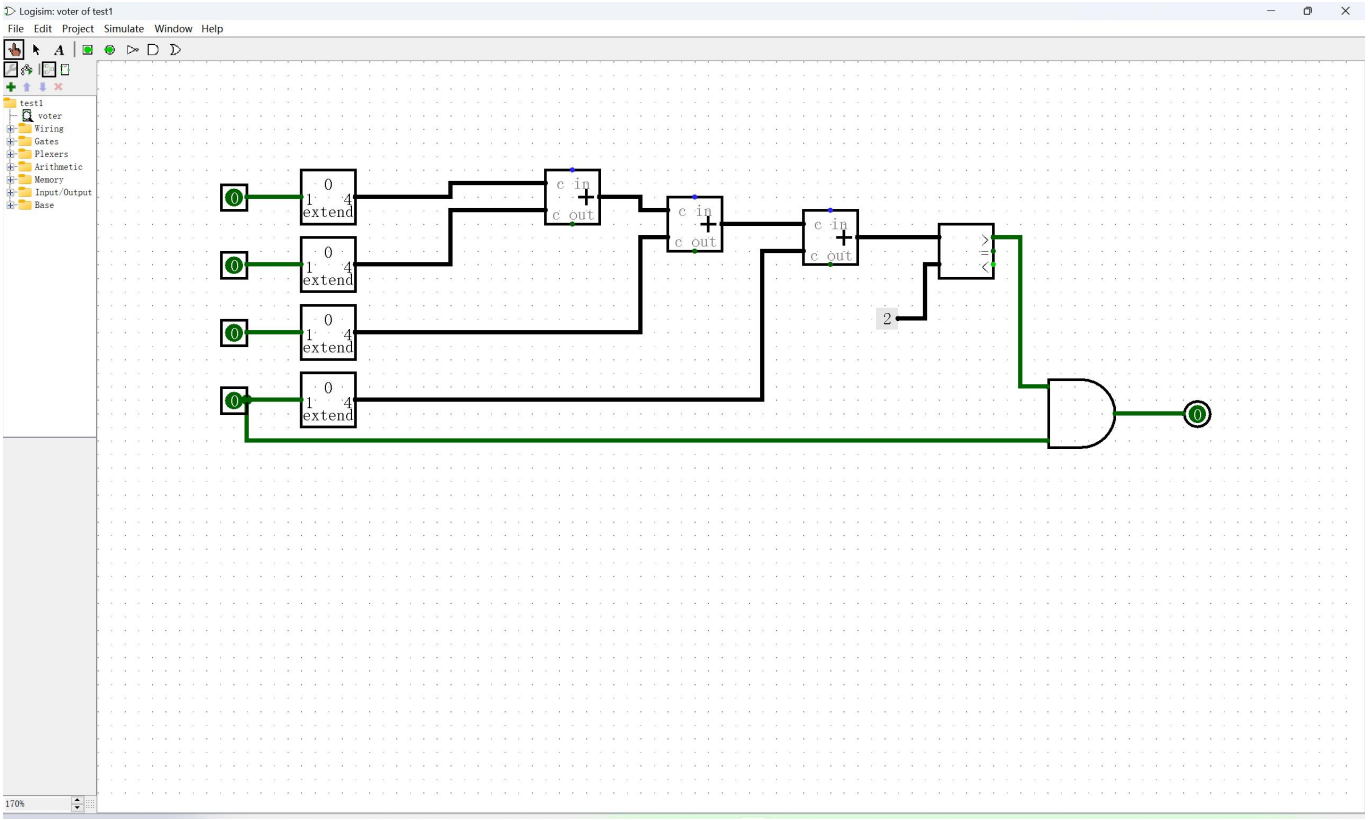
Logisim: voter of test1
File Edit Project Simulate Window Help
extend
c in
c out
2

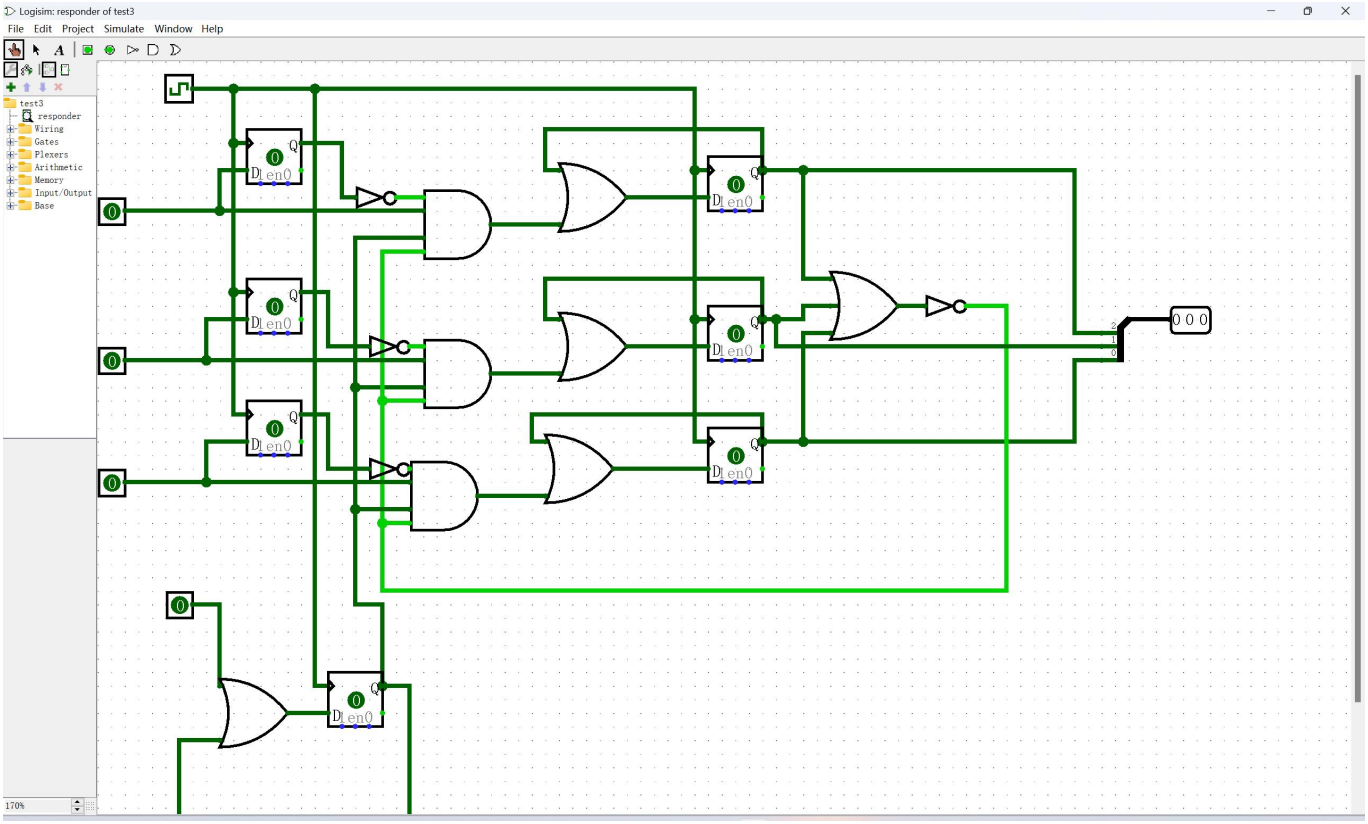
Logisim: responder of test3
File Edit Project Simulate Window Help
test3
responder
Wiring
Gates
Plexers
Arithmetic
Memory
Input/Output
Base
0 0 0
170%

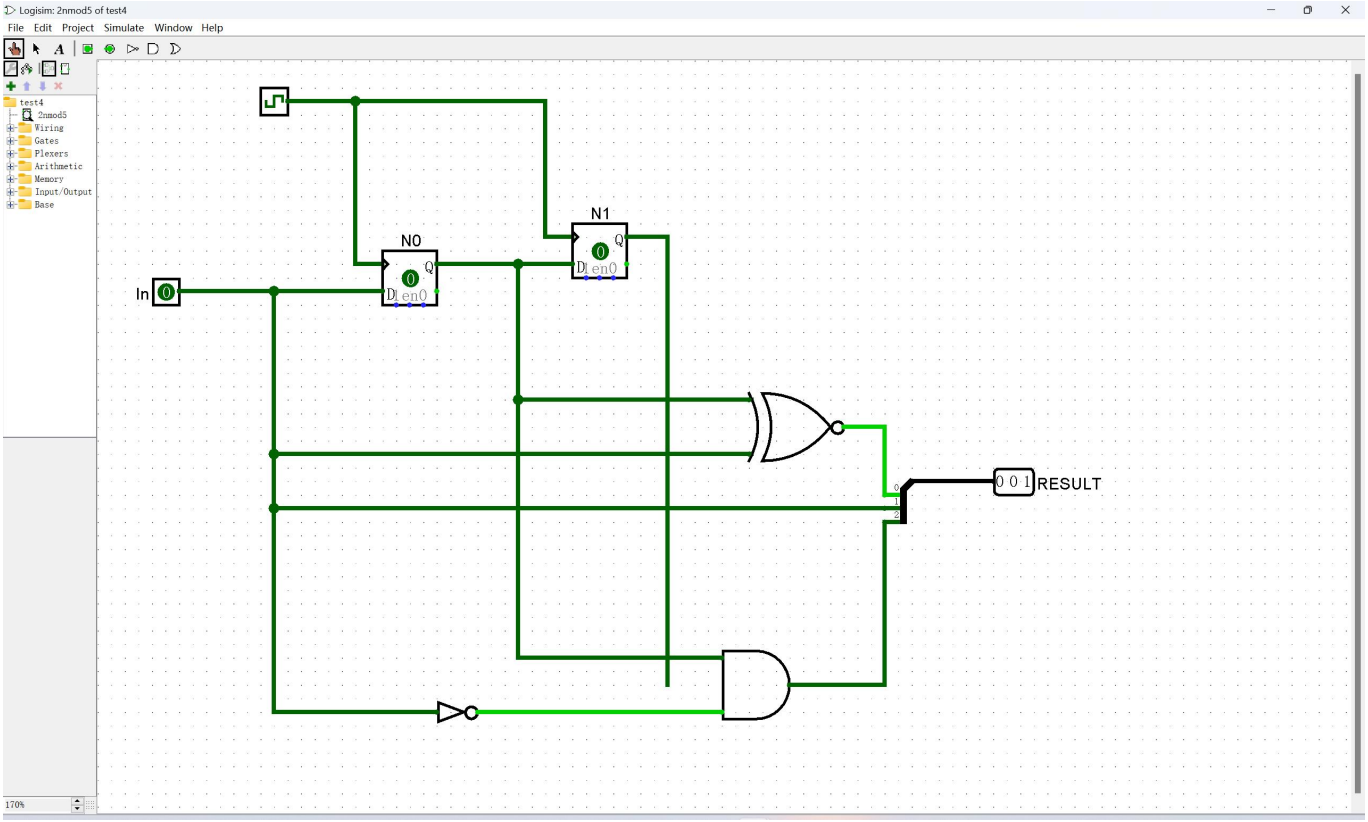
Logisim: 2nmod5 of test4
File Edit Project Simulate Window Help
test4
2nmod5
Wiring
Gates
Plexers
Arithmetic
Memory
Input/Output
Base
In
N0
N1
0 0 1
RESULT
170%

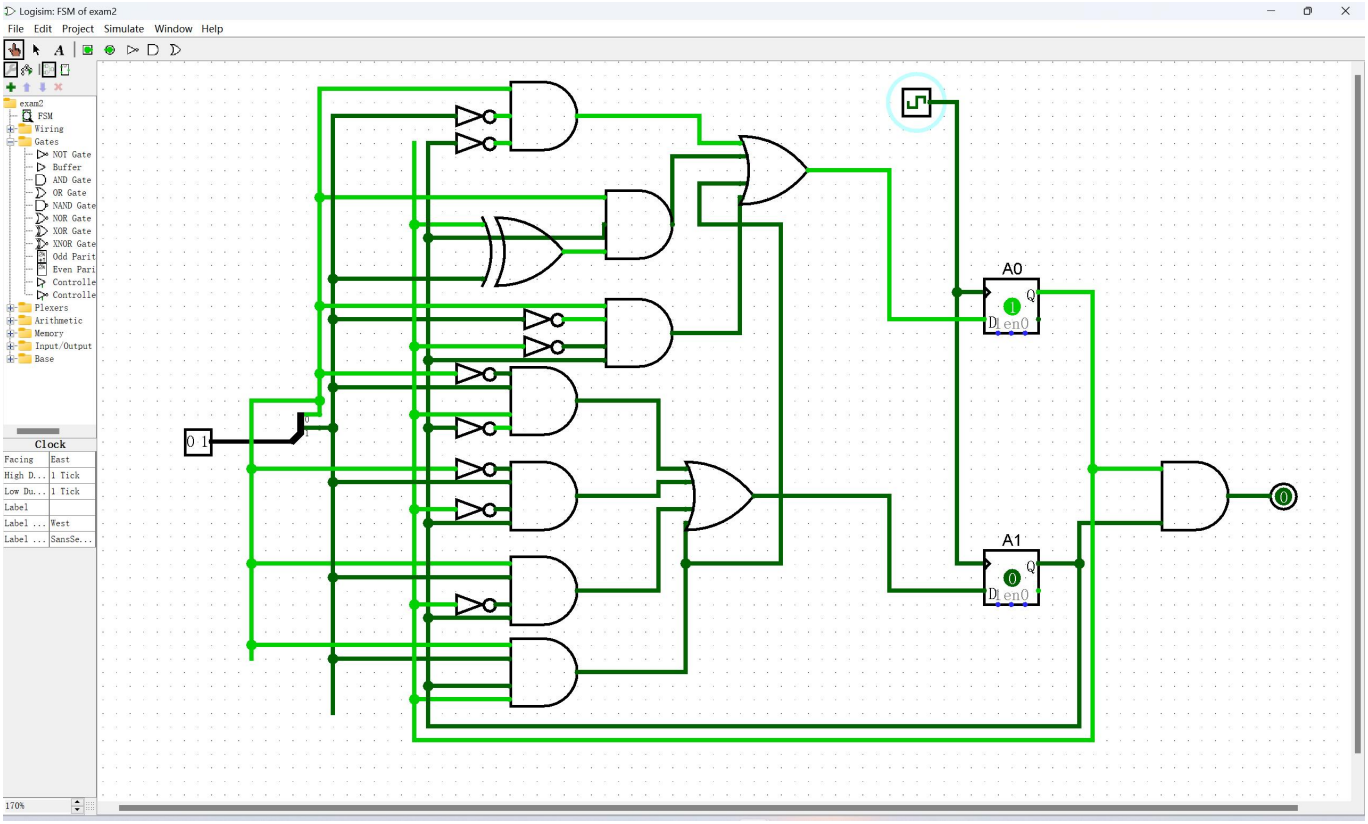
Logisim: FSM of exam2
File Edit Project Simulate Window Help
exam2
FSM
Wiring
Gates
NOT Gate
Buffer
AND Gate
OR Gate
NAND Gate
NOR Gate
XOR Gate
XNOR Gate
Odd Parit
Even Pari
Controlle
Controlle
Plexers
Arithmetic
Memory
Input/Output
Base
Clock
Facing East
High D... 1 Tick
Low Du... 1 Tick
Label
Label ... West
Label ... SansSe...
170%
A0
A1
Q
D
en