单周期cpu

1.main

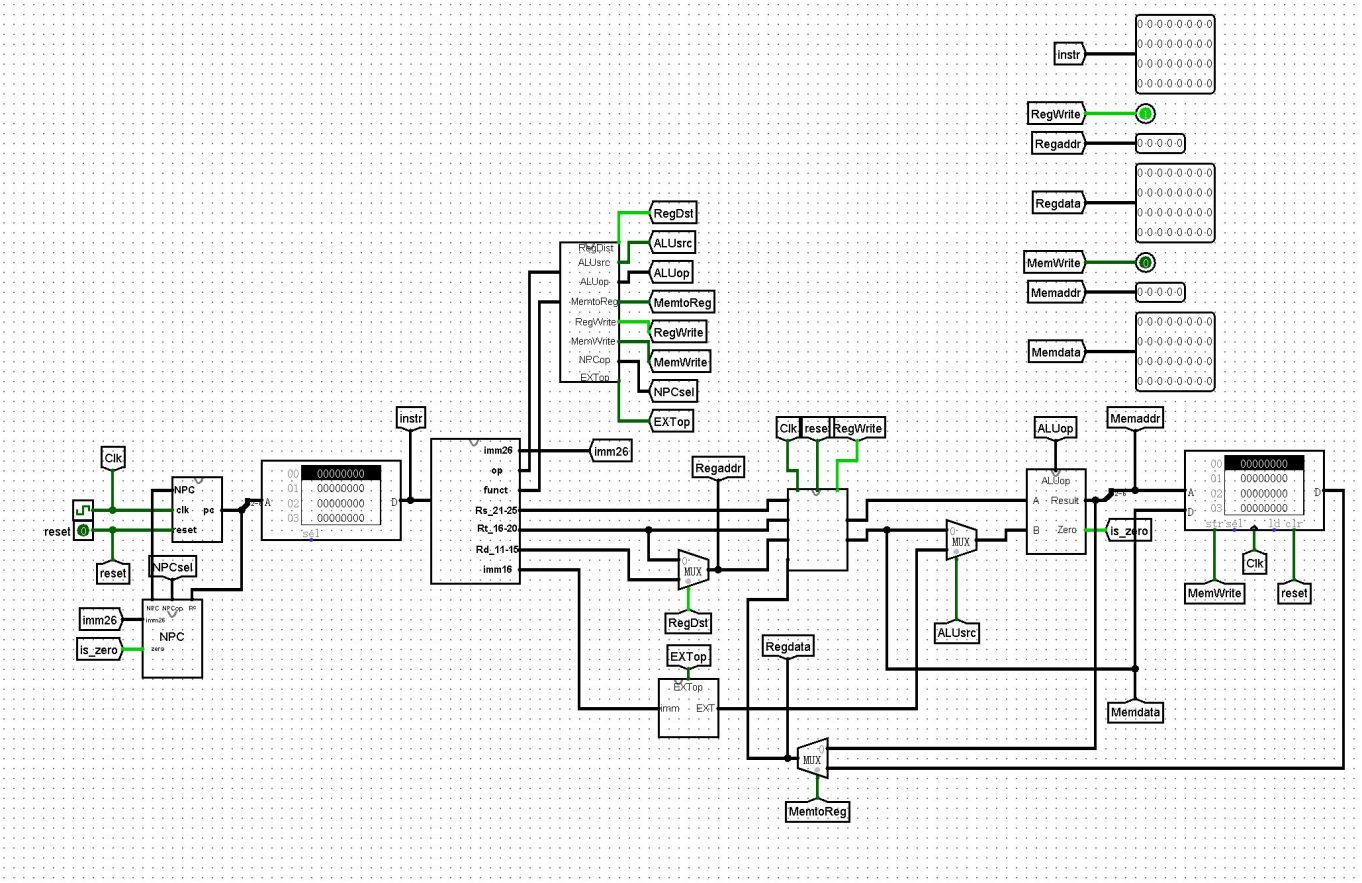

2.NPC

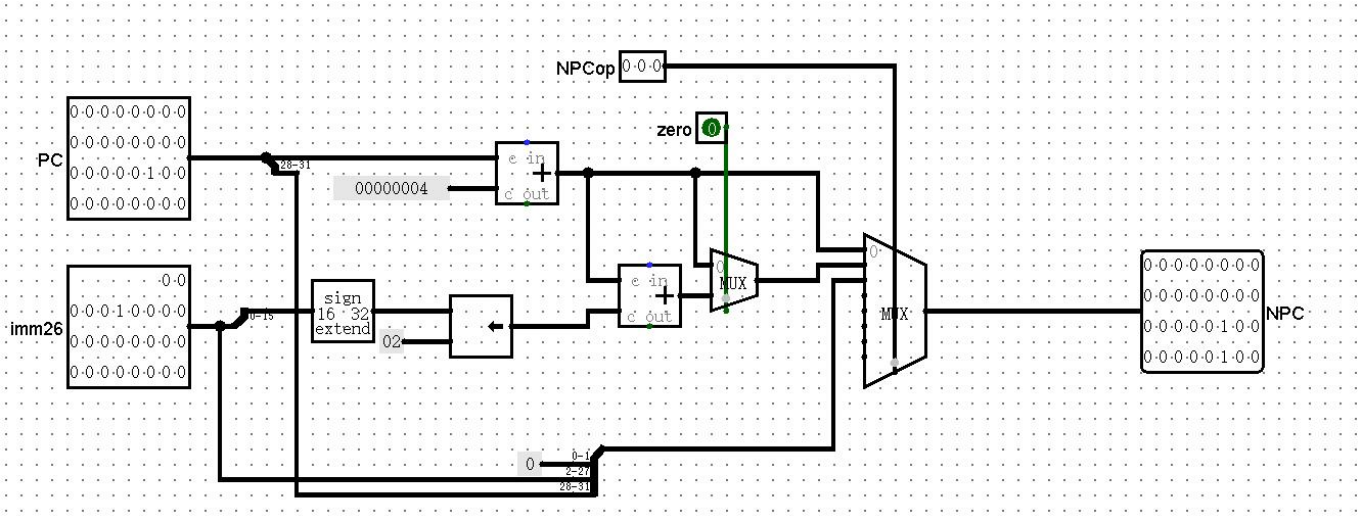
NPCop
zero
PC
00000004
imm26
sign
16 32
extend
02
MUX
MUX
NPC

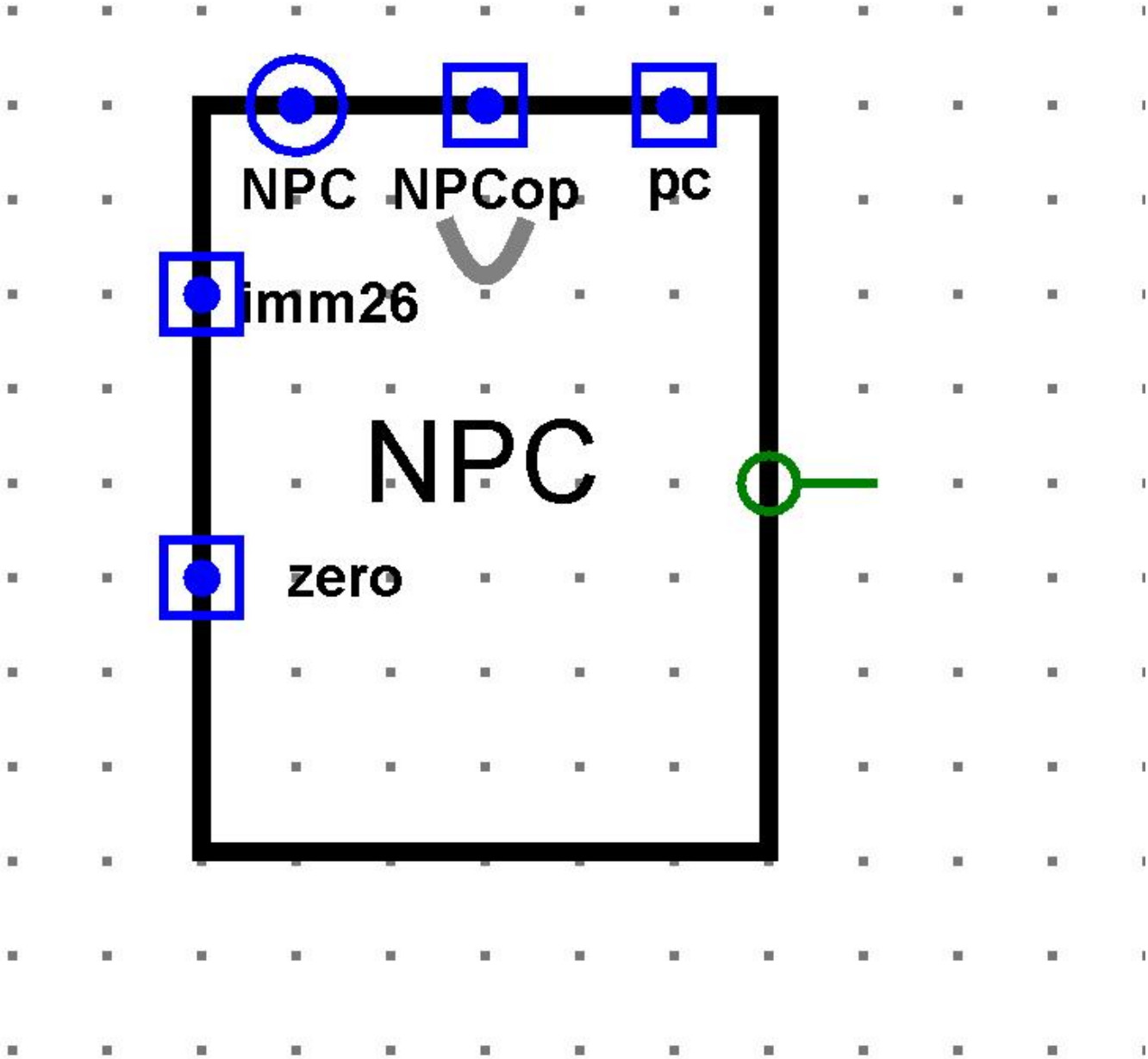
NPC
NPCop
pc
imm26
NPC
zero

3.PC

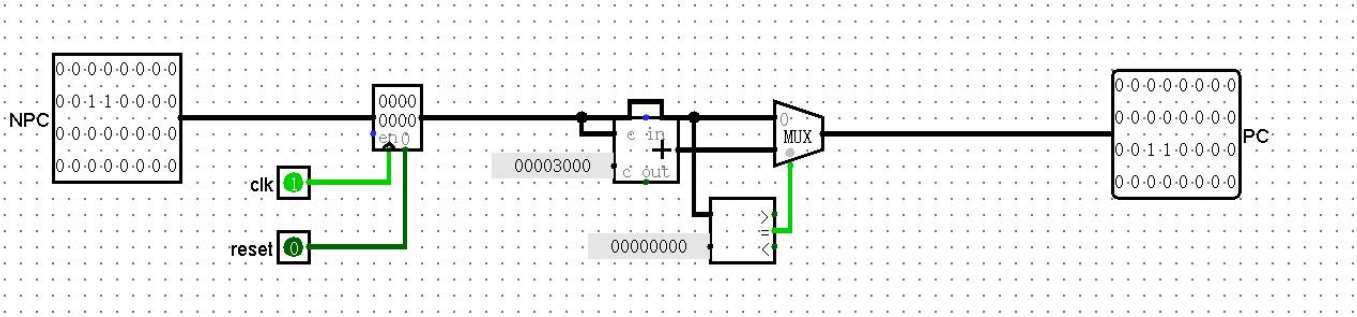
NPC
0000
0000
en 0
clk
reset
00003000
e in
c out
00000000
MUX
PC

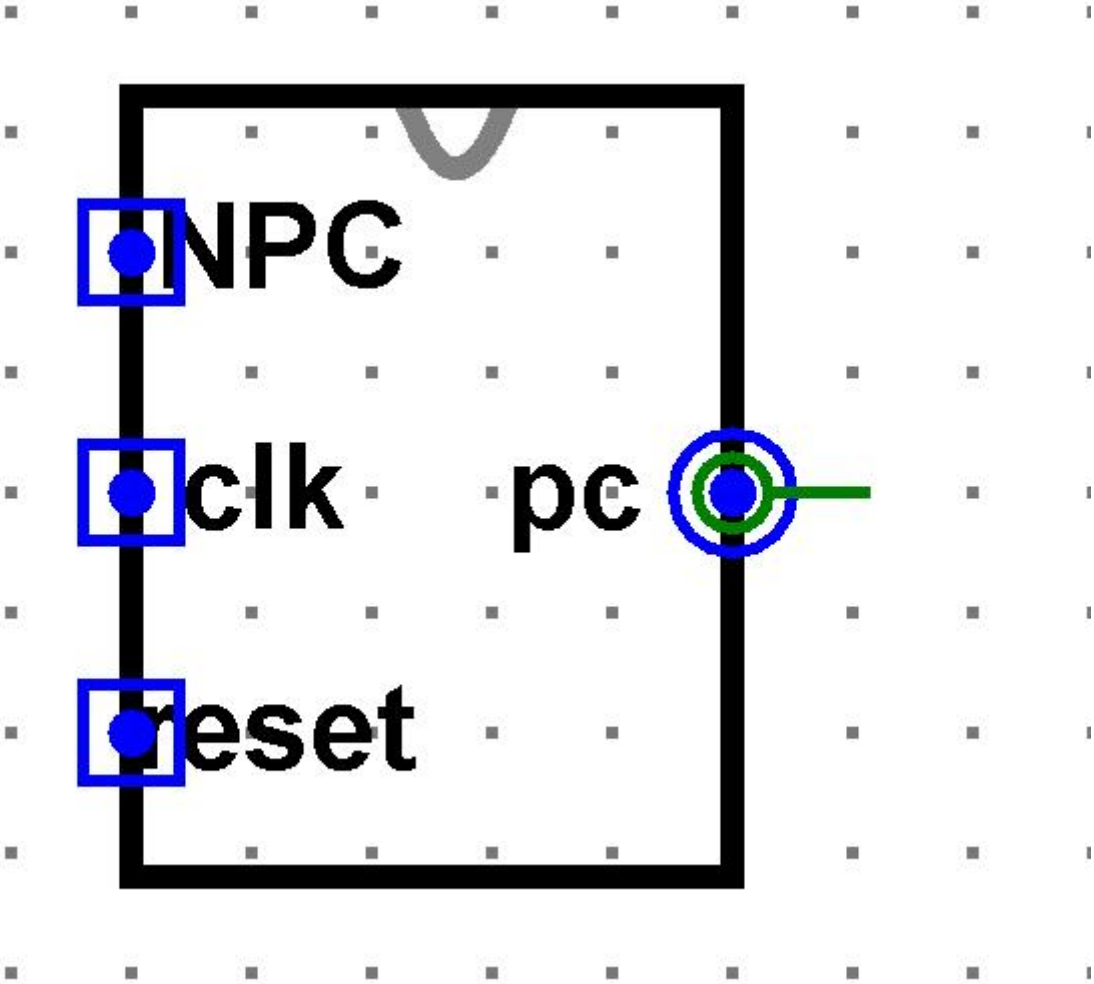
NPC
clk
pc
reset

4.splliter

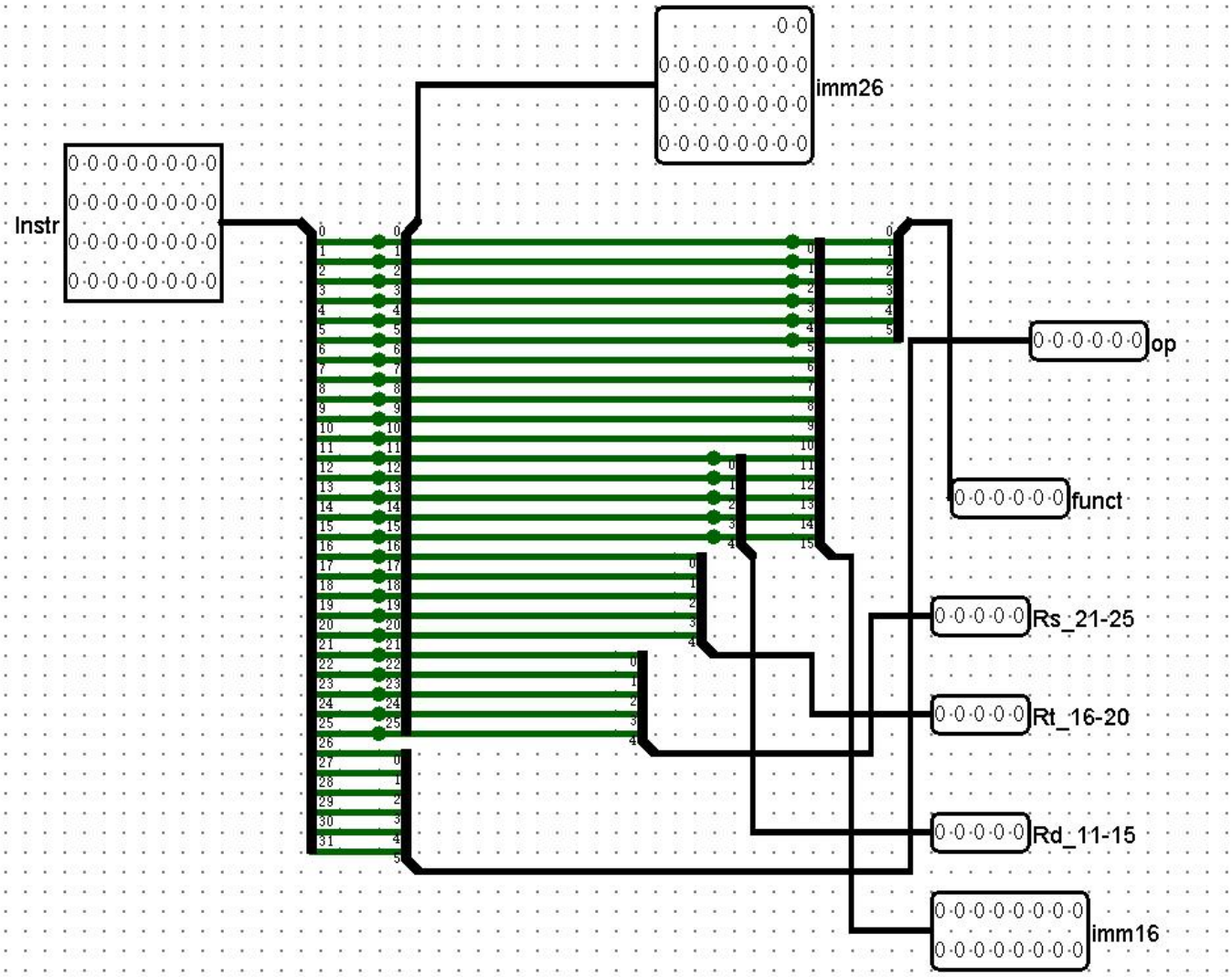
imm26
Instr
op
funct
Rs_21-25
Rt_16-20
Rd_11-15
imm16

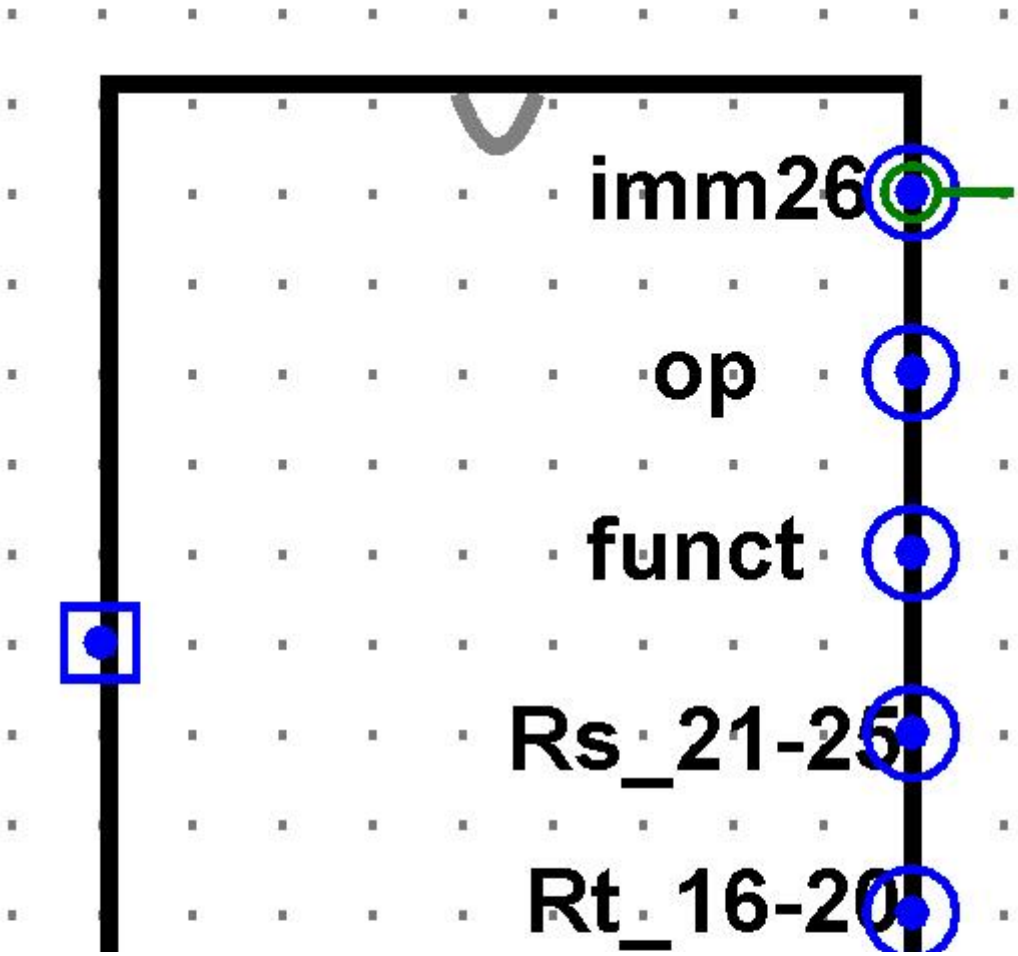
imm26
op
funct
Rs_21-25
Rt_16-20

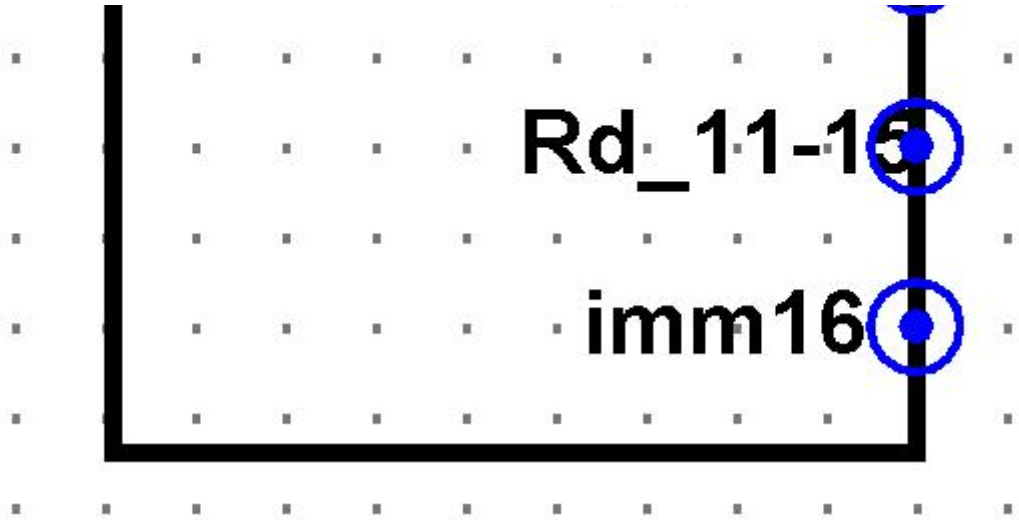
Rd_11-15
imm16

5.EXT

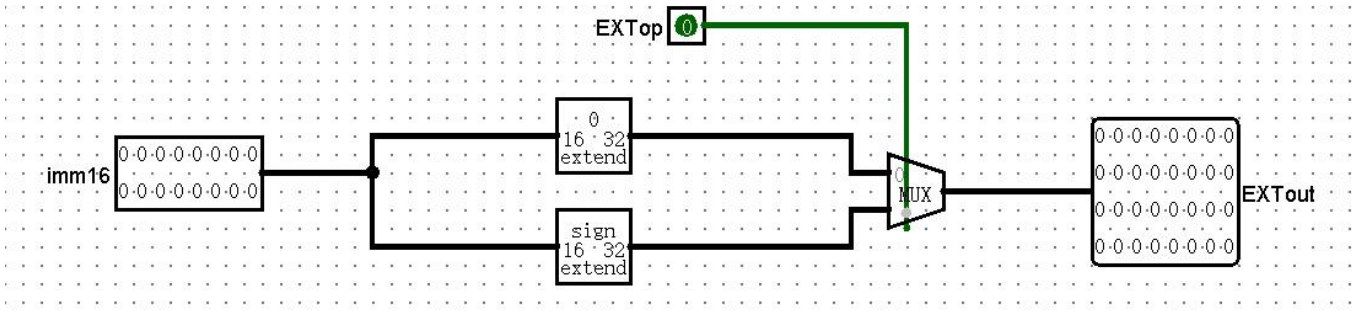
EXTop
imm16
0 16 32 extend
sign 16 32 extend
MUX
EXTout

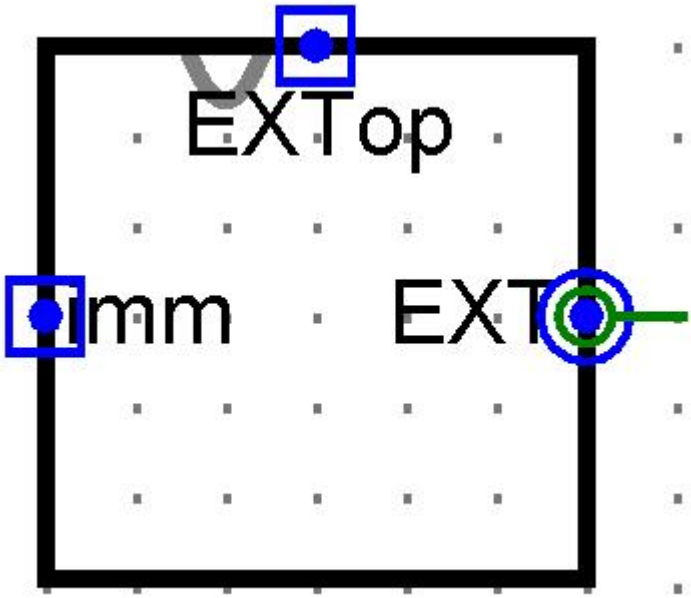
EXTop
Imm
EXT

6.ALU

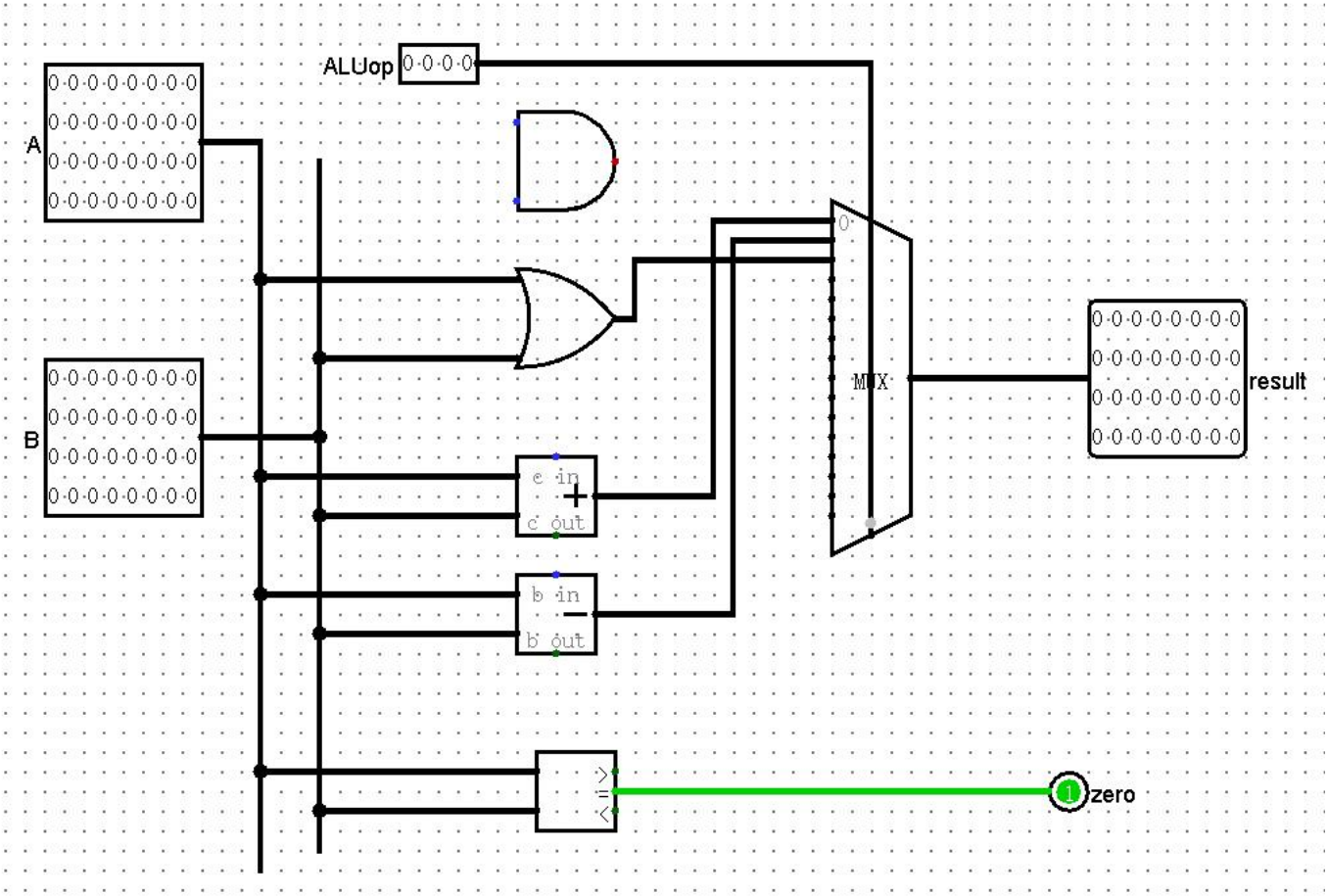

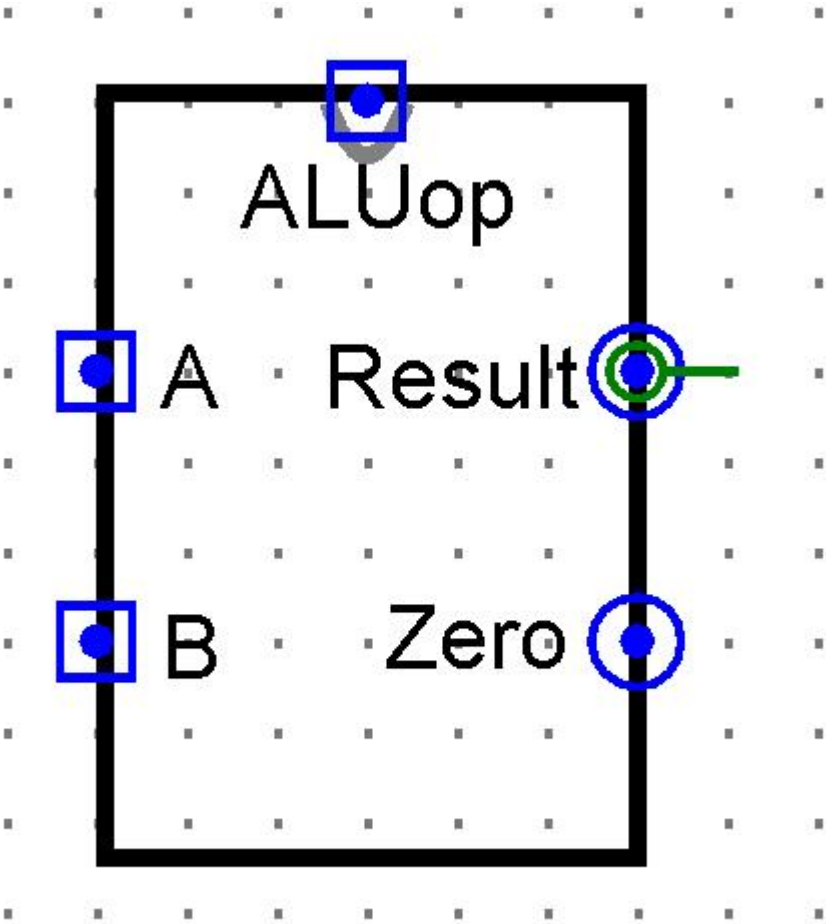

7.control

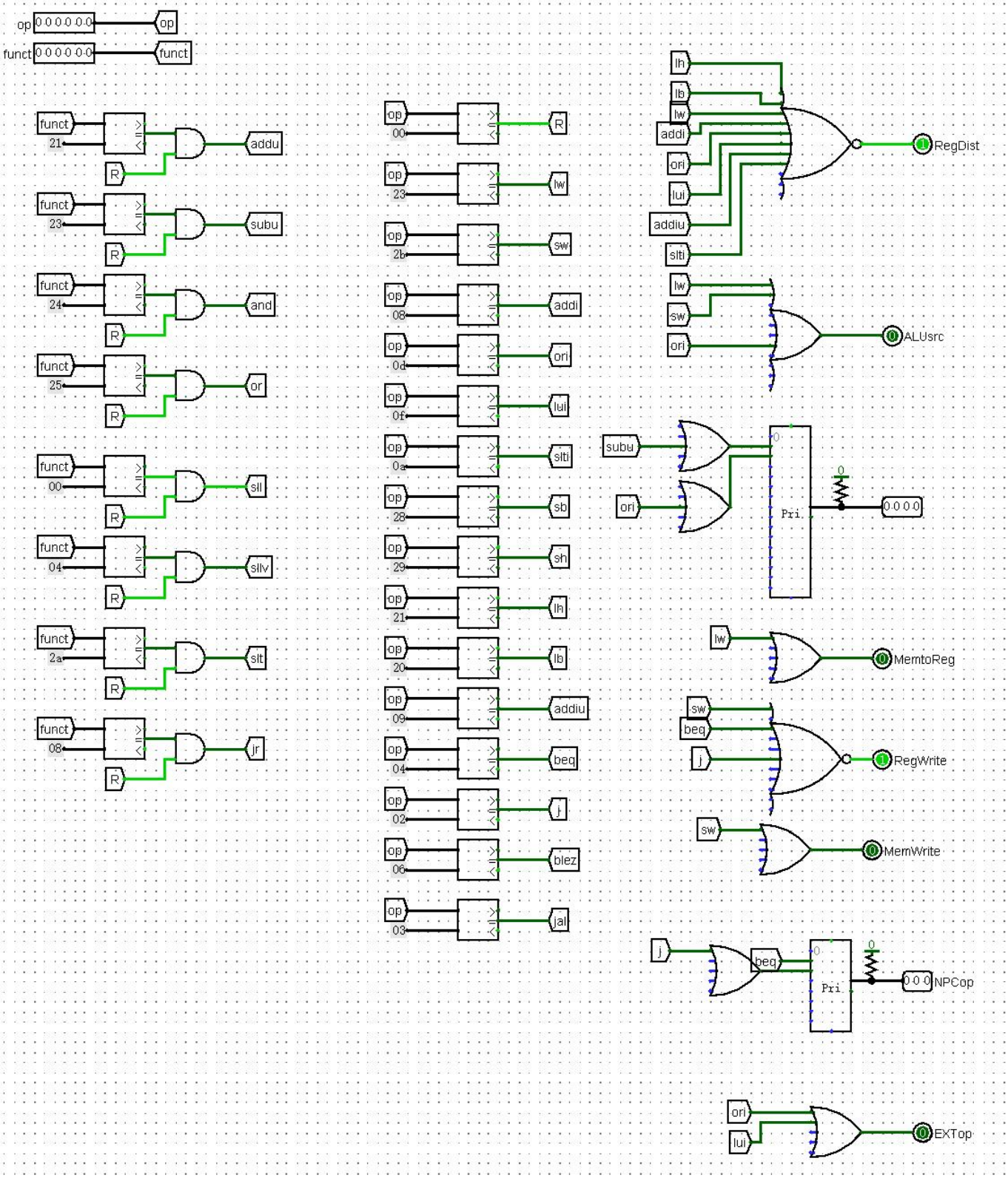
op
funct
addu
subu
and
or
sll
sllv
slt
jr
R
lw
sw
addi
ori
lui
slti
sb
sh
lh
lb
addiu
beq
j
blez
jal
RegDist
ALUsrc
MemtoReg
RegWrite
MemWrite
NPCop
EXTop
Pri

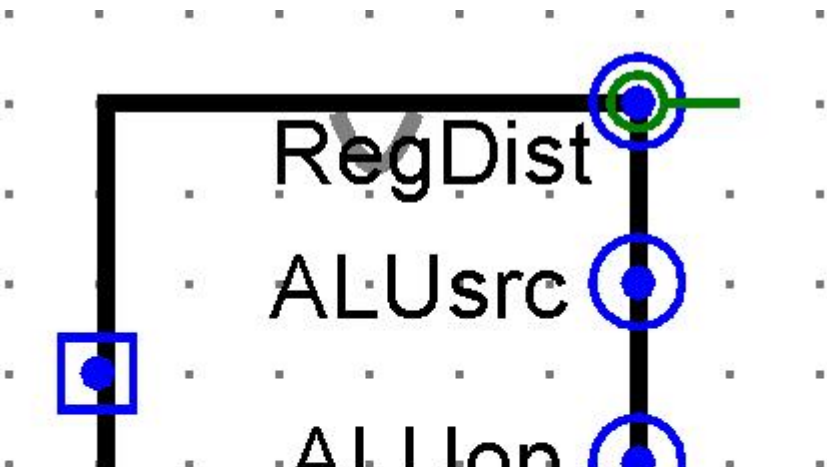
RegDist
ALUsrc

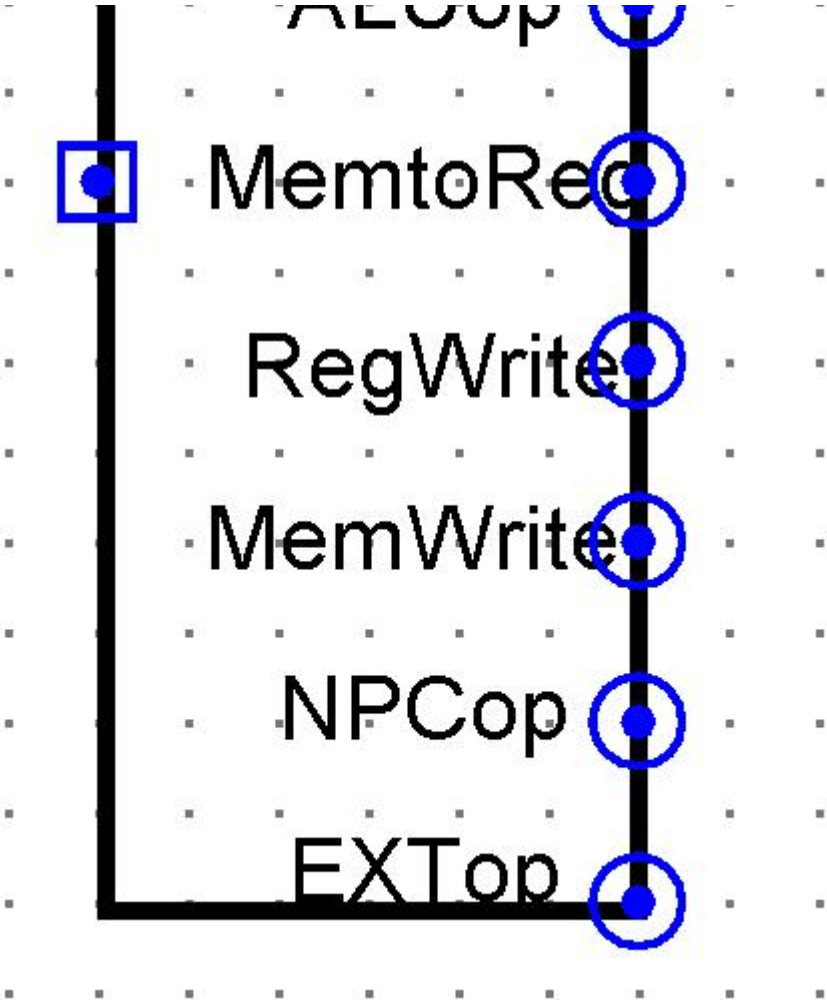
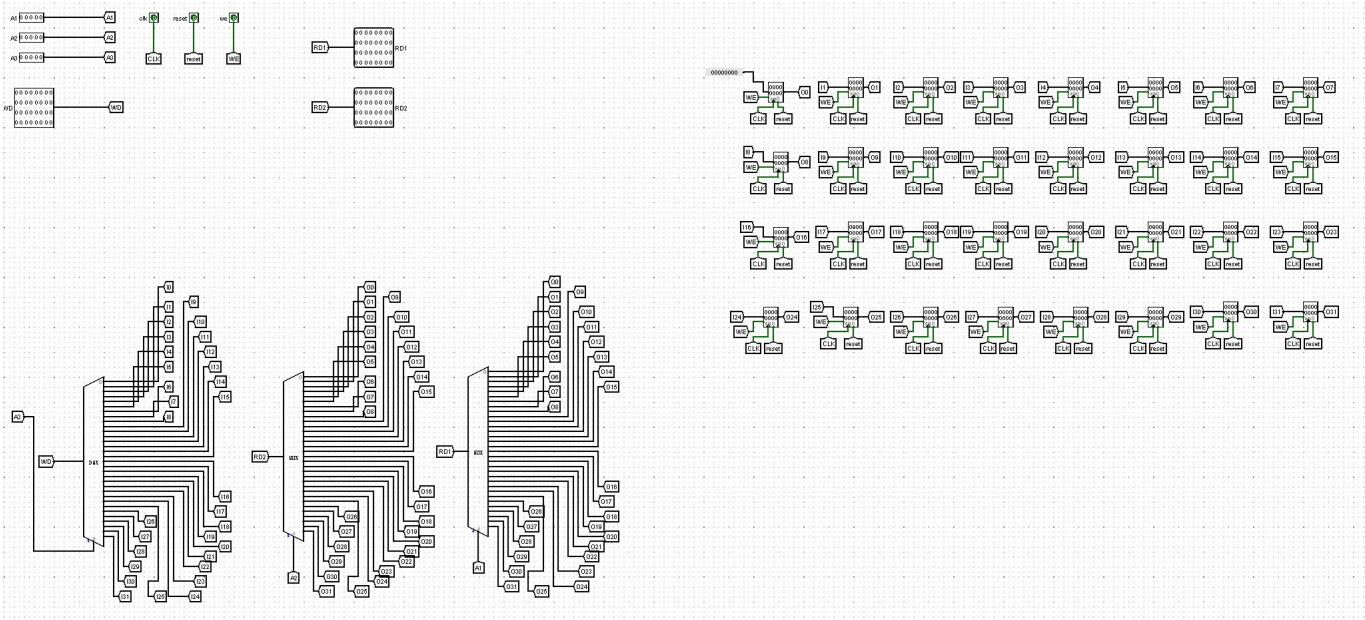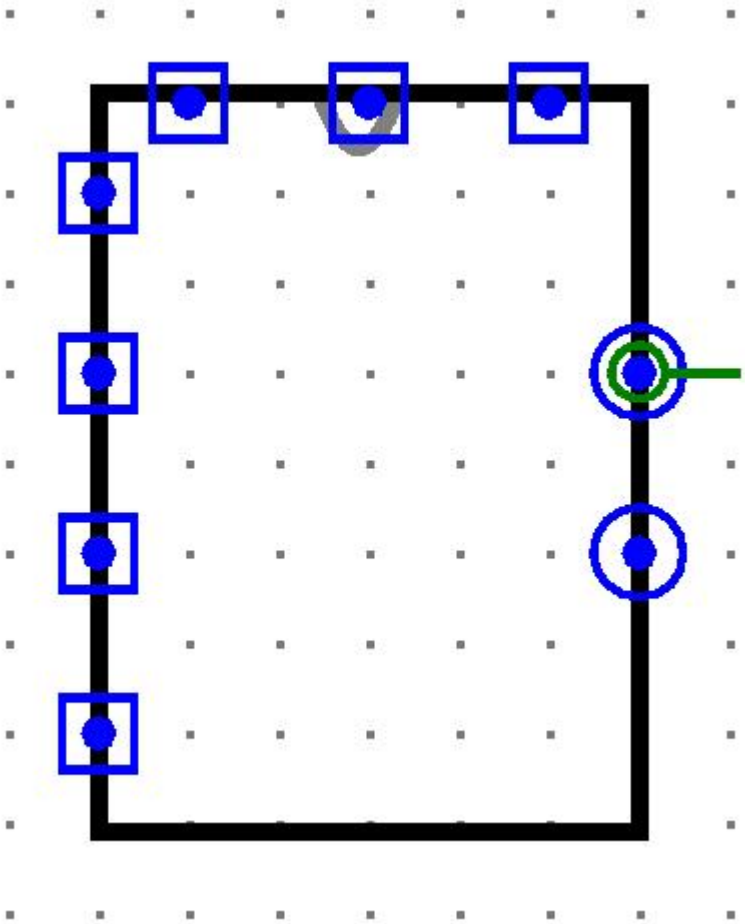
8.grf