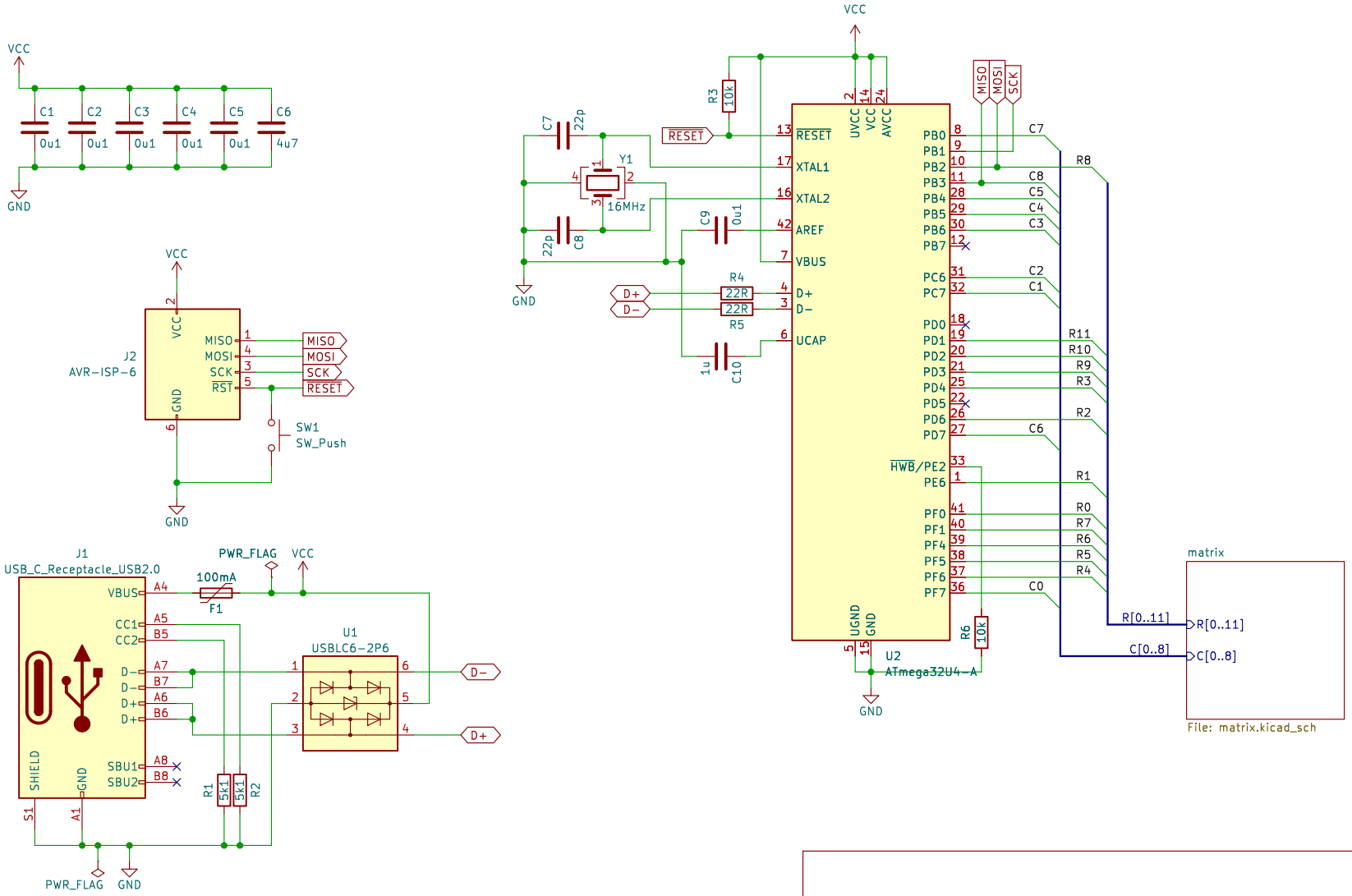

Lucas Jansen

Sheet: /

File: noxary280.kicad_sch

Title: Noxary 280 Hi-Tek/NMB Series 725 PCB

Size: A4	Date: 2023-11-07	**Rev: 0**
KiCad E.D.A. kicad 7.0.8		Id: 1/2

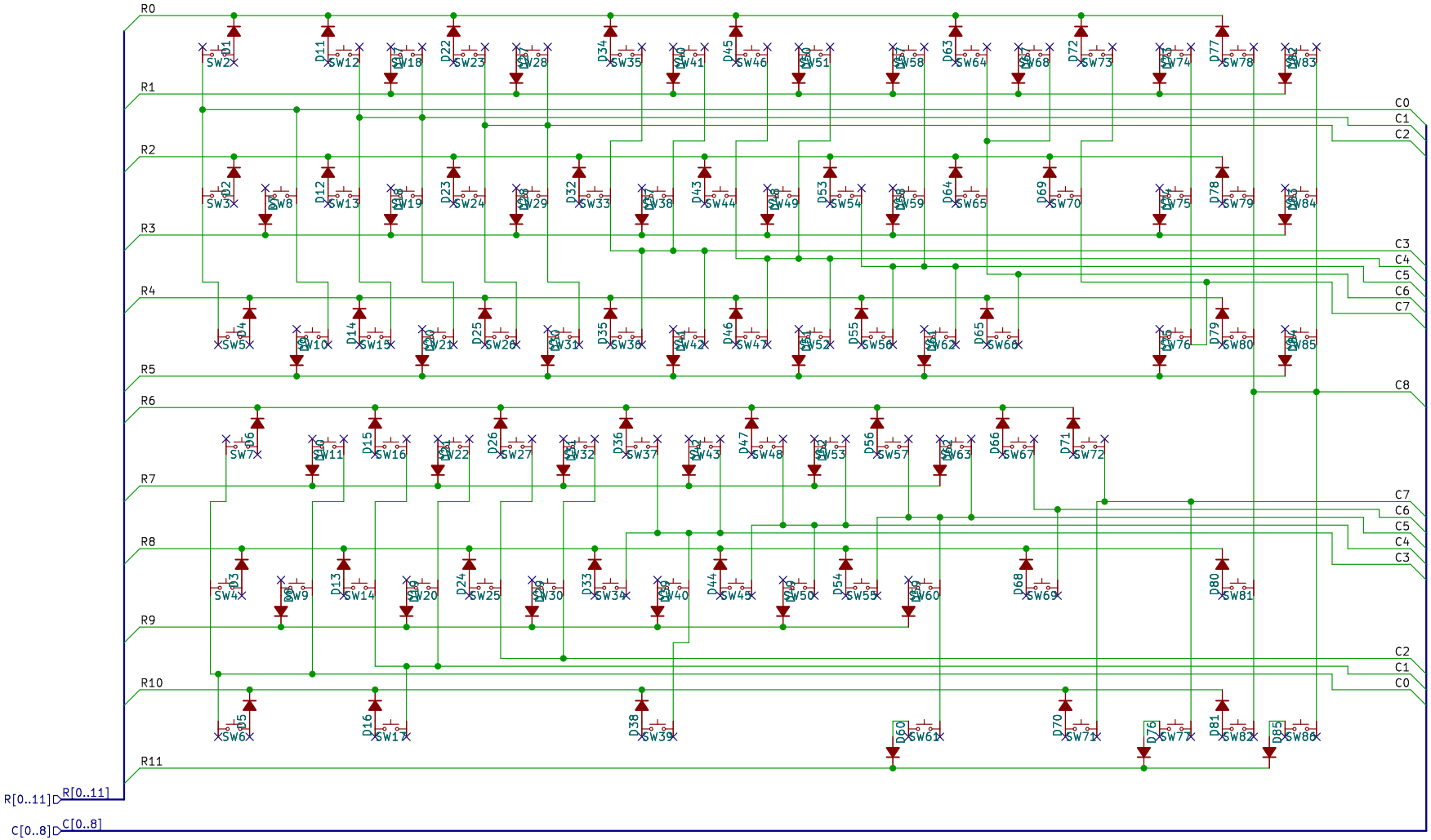

Lucas Jansen

Sheet: /matrix/
File: matrix.kicad_sch

Title: Noxary 280 Hi-Tek/NMB Series 725 PCB

Size: A4	Date: 2023-11-07	**Rev: 0**
KiCad E.D.A. kicad 7.0.8		Id: 2/2