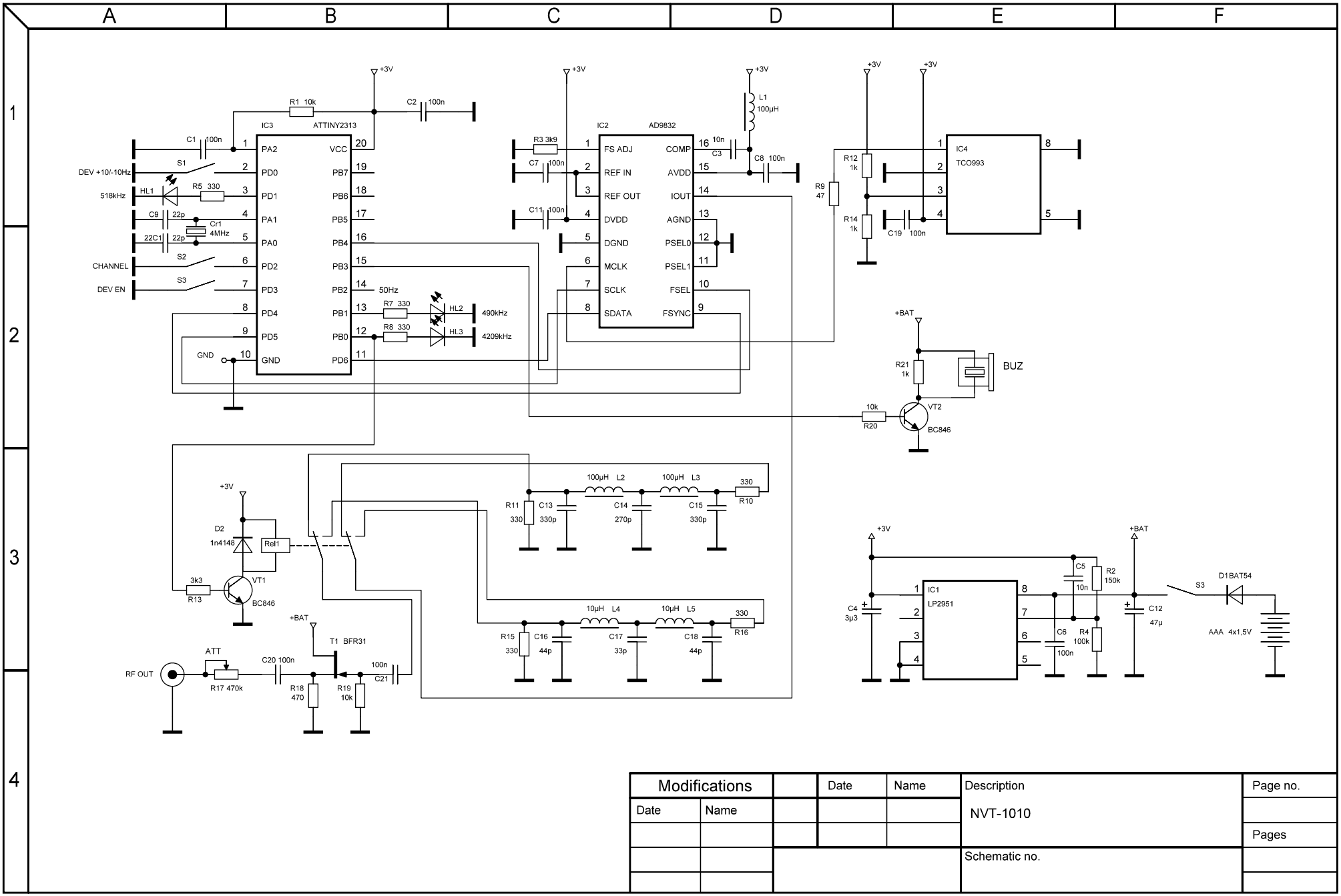

Modifications			Date	Name	Description	Page no.
Date	Name				NVT-1010	
						Pages
					Schematic no.	