Luke Sequeira

COTTER JOINT ANALYSIS

(Ansys)

Material Information		
45C8 – High Carbon Steel		
Density	**Youngs Modulus**	**Poisson's Ratio**
78×10^2 kg/mm^3	200×10^3 MPa	0.295

Analysis Setup	
P = 45×10^3 N	
	Connections
Socket end	Fixed
Spigot end	Force

Assembly Analysis Information		
	Minimum	**Maximum**
Total Deformation	0 mm	4.91×10^{-2} mm
Equivalent Stress (von-Mises)	1.769×10^{-2} MPa	122.1 MPa
Principle Stress	-2.84 MPa	177.37 MPa
Shear Stress	-43.47 MPa	46.387 MPa

Luke Sequeira

Total Deformation:

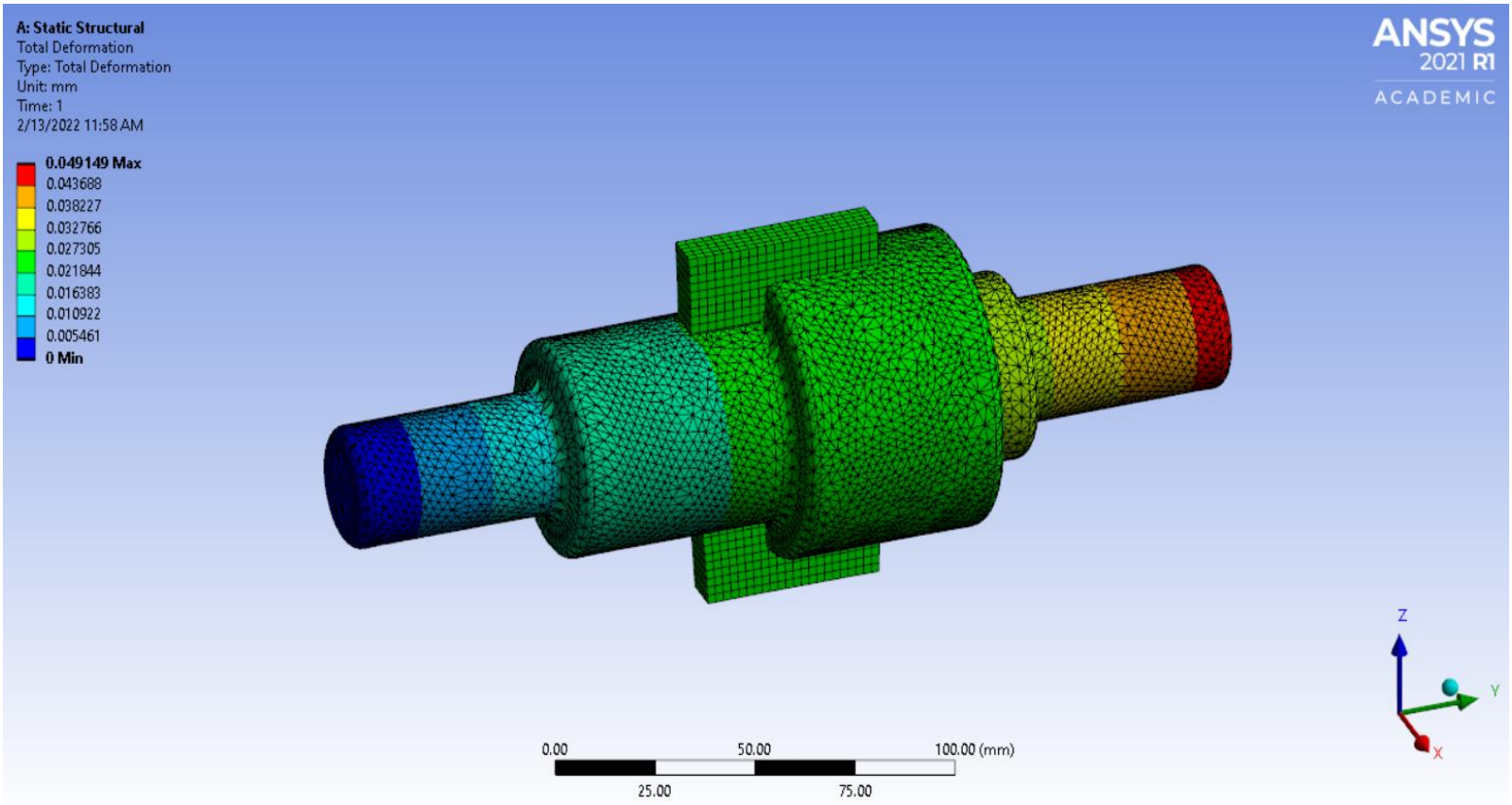

Equivalent Stress:

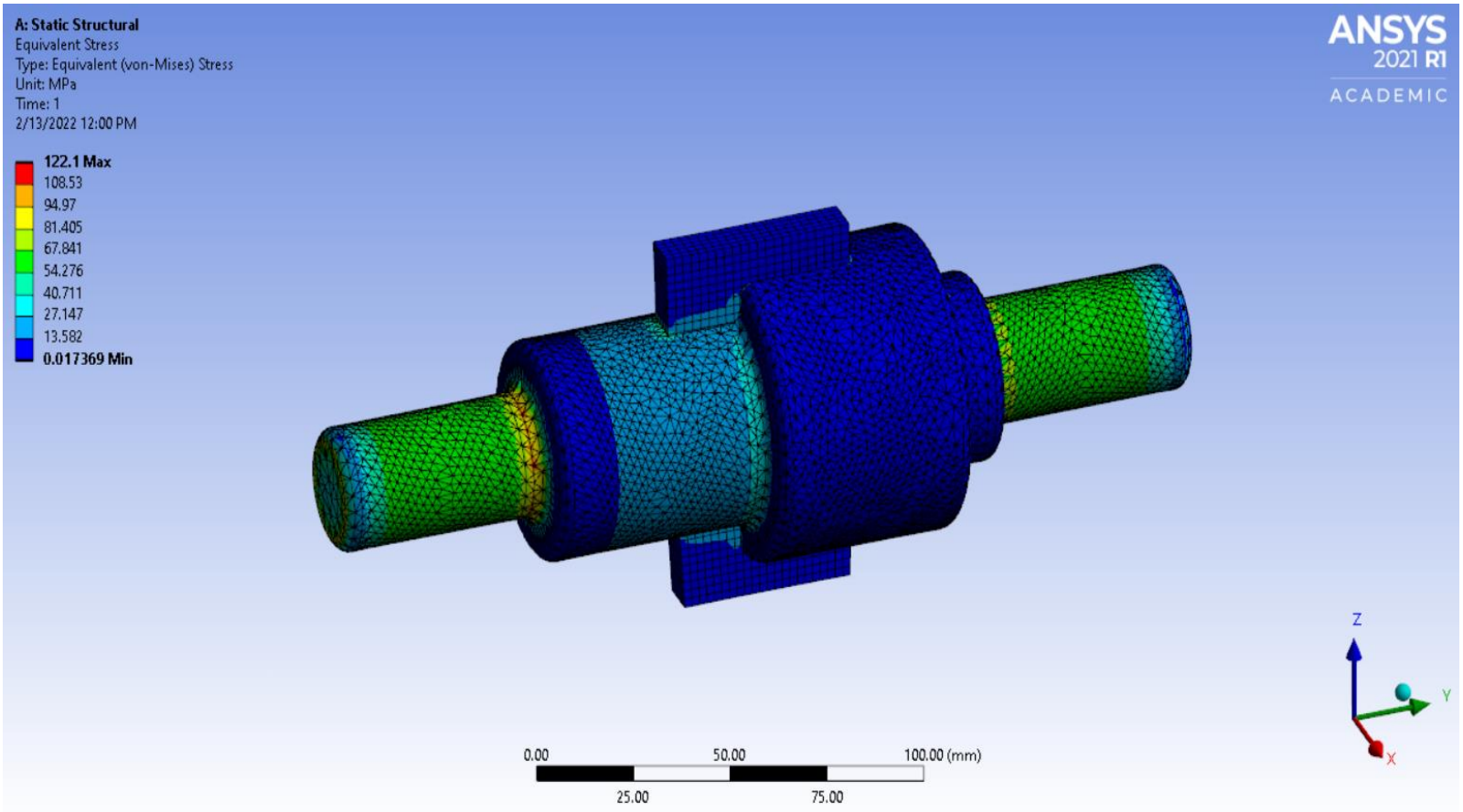

Luke Sequeira

Principle Stress:

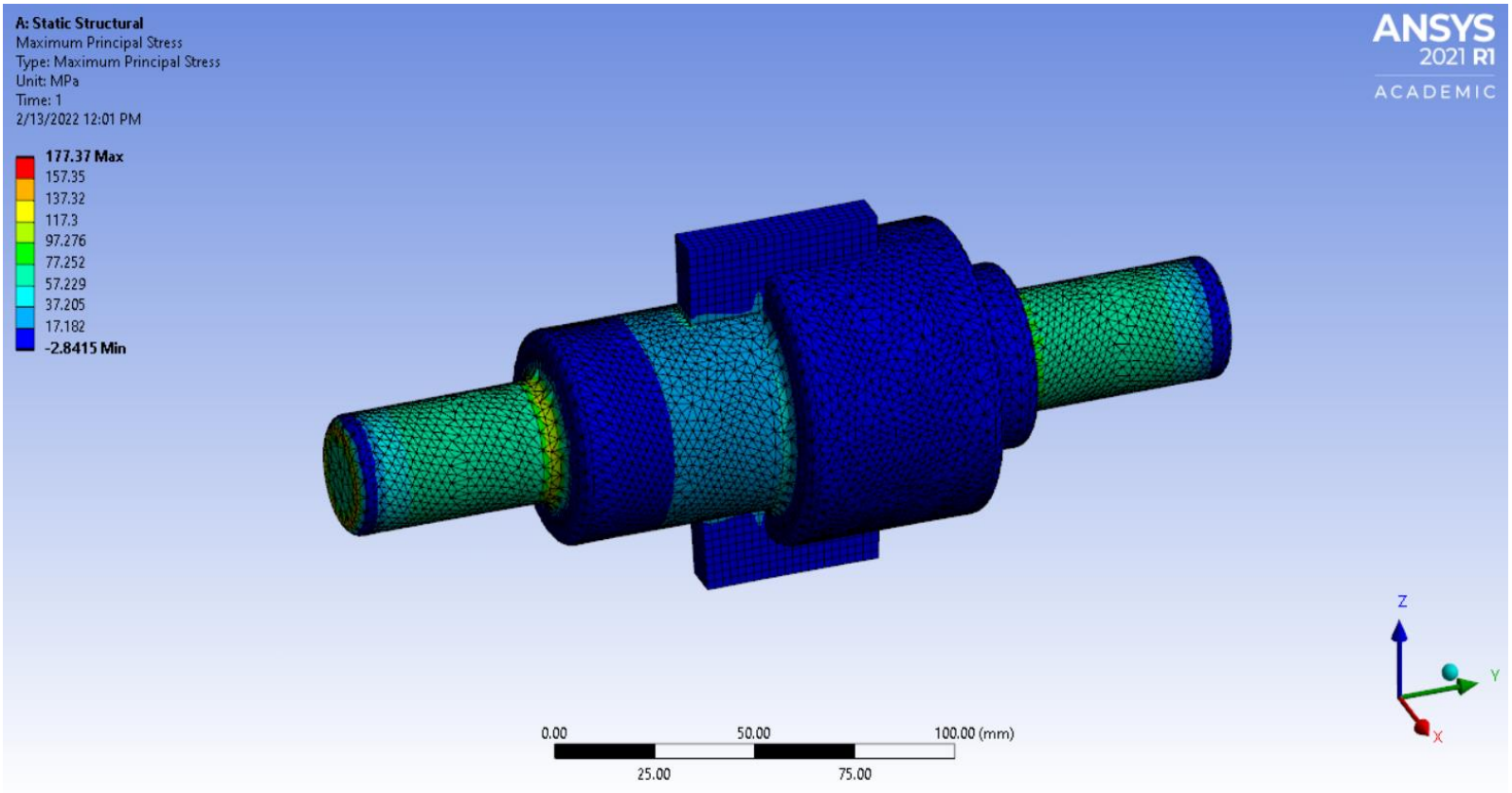

Shear Stress:

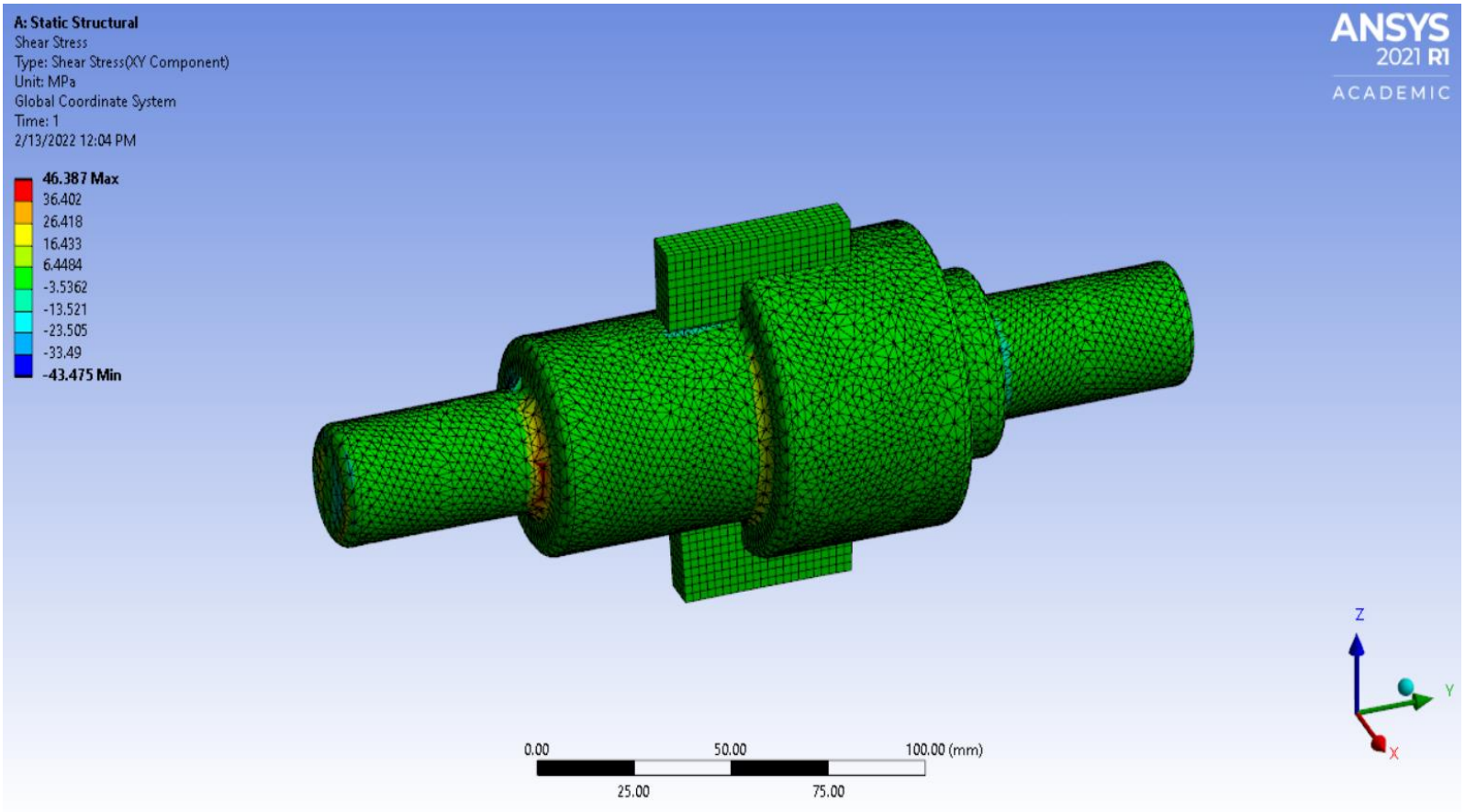

Luke Sequeira
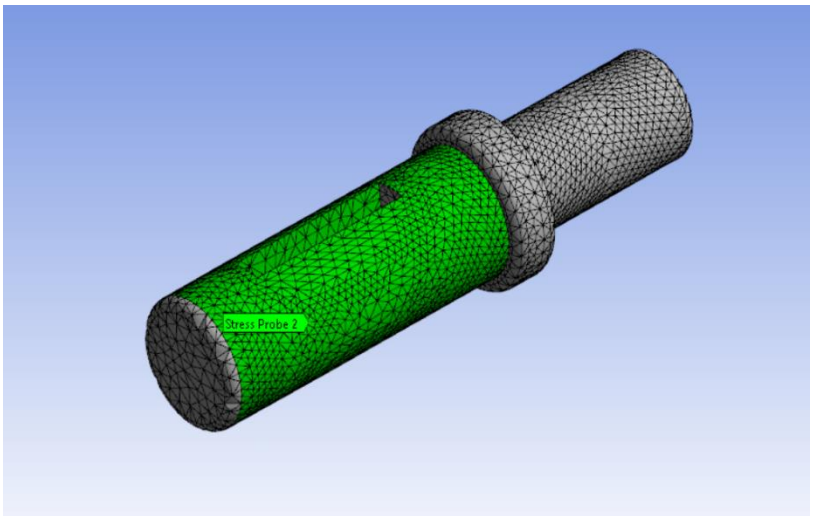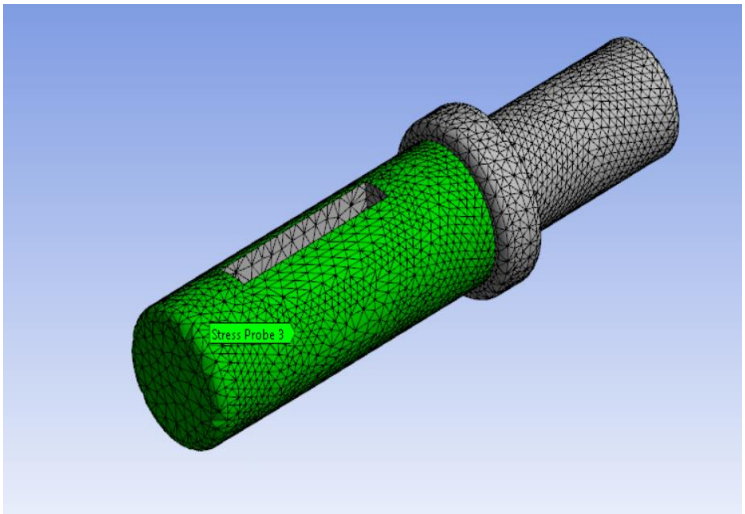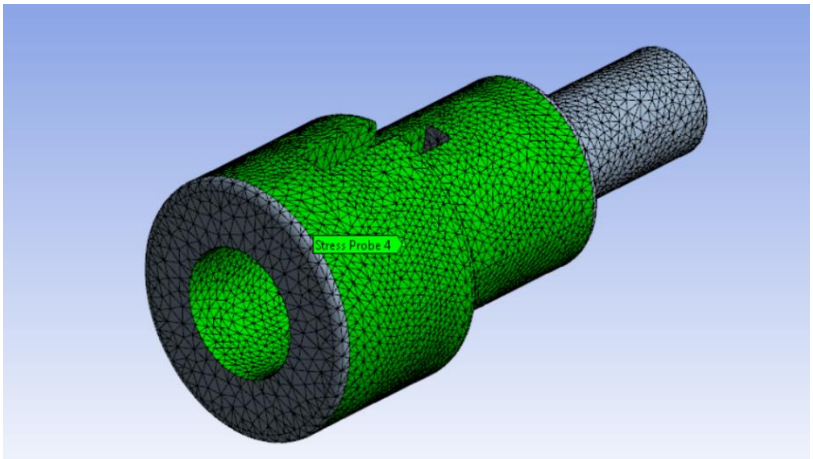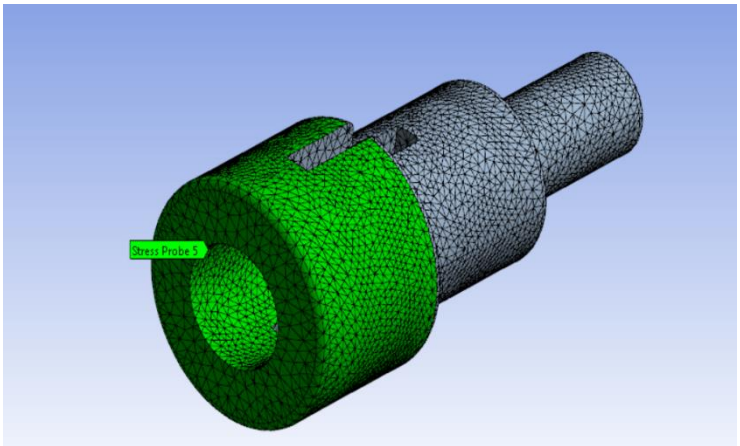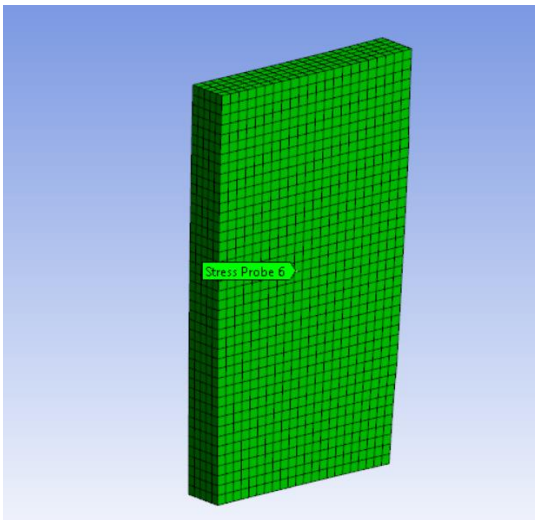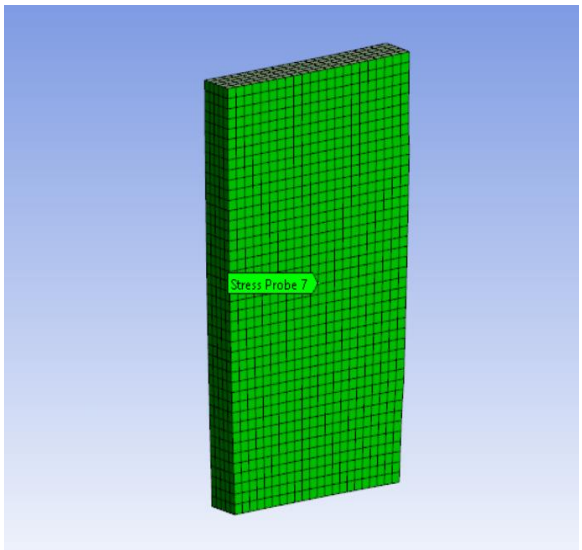
Components Analysis Information		
	Tensile	**Shear**
Spigot	30.836 MPa	9.603 MPa
Socket	55.925 MPa	16.768 MPa
Cotter	43.034 MPa	19.983 MPa