US008047094B2

(12) **United States Patent**
Love et al.

(10) **Patent No.: US 8,047,094 B2**
(45) **Date of Patent: Nov. 1, 2011**

(54) **HYDRAULIC INVOLUTE CAM ACTUATOR**

(75) Inventors: **Lonnie J. Love**, Knoxville, TN (US); **Randall F. Lind**, Loudon, TX (US)

(73) Assignee: **UT-Battelle, LLC**, Oak Ridge, TN (US)

(*) Notice: Subject to any disclaimer, the term of this patent is extended or adjusted under 35 U.S.C. 154(b) by 492 days.

(21) Appl. No.: **12/394,276**

(22) Filed: **Feb. 27, 2009**

(65) **Prior Publication Data**

US 2010/0218626 A1 Sep. 2, 2010

(51) **Int. Cl.**
F16H 27/02 (2006.01)

(52) **U.S. Cl.** **74/490.05**; 623/59; 901/28

(58) **Field of Classification Search** 74/490.01, 74/490.05, 490.06, 567, 569; 901/15, 22, 901/25, 28, 29; 623/24, 57–61
See application file for complete search history.

(56) **References Cited**

U.S. PATENT DOCUMENTS

2,010,377	A *	8/1935	Sassen	91/180
4,628,765	A	12/1986	Dien et al.	
4,966,067	A	10/1990	Ames et al.	
5,107,719	A *	4/1992	Kota	74/490.01
6,658,962	B1 *	12/2003	Rosheim	74/490.05

FOREIGN PATENT DOCUMENTS

GB	1 217 134	12/1970
GB	1 374 997	11/1974

* cited by examiner

Primary Examiner — Raymond Addie
(74) *Attorney, Agent, or Firm* — Luedeka, Neely & Graham, P.C.

(57) **ABSTRACT**

Mechanical joints are provided in which the angle between a first coupled member and a second coupled member may be varied by mechanical actuators. In some embodiments the angle may be varied around a pivot axis in one plane and in some embodiments the angle may be varied around two pivot axes in two orthogonal planes. The joints typically utilize a cam assembly having two lobes with an involute surface. Actuators are configured to push against the lobes to vary the rotation angle between the first and second coupled member.

15 Claims, 10 Drawing Sheets

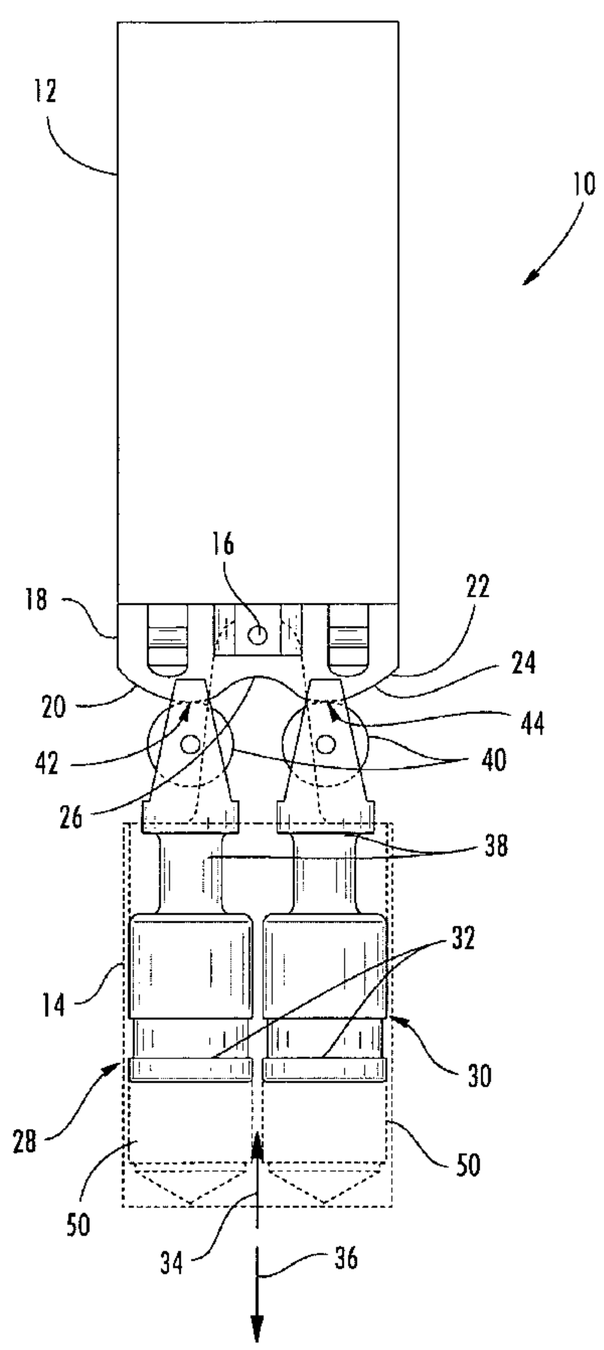

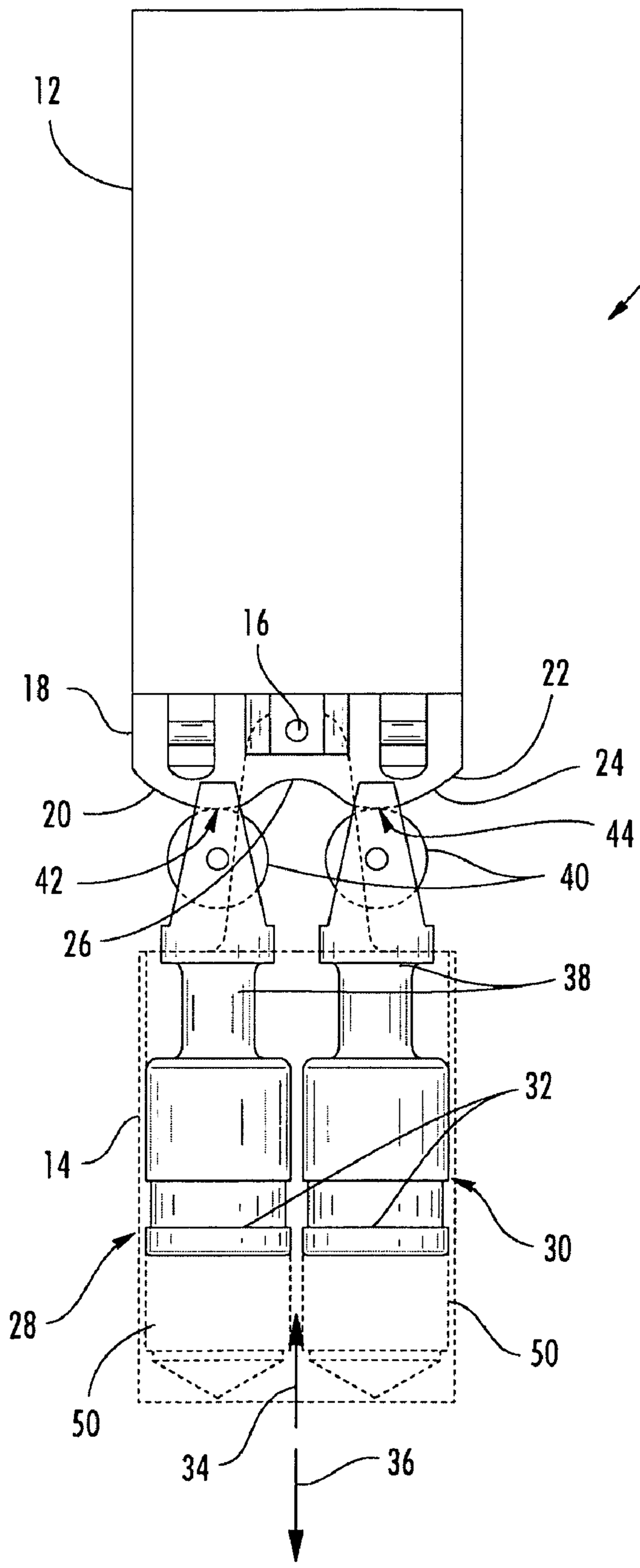

FIG. 1A

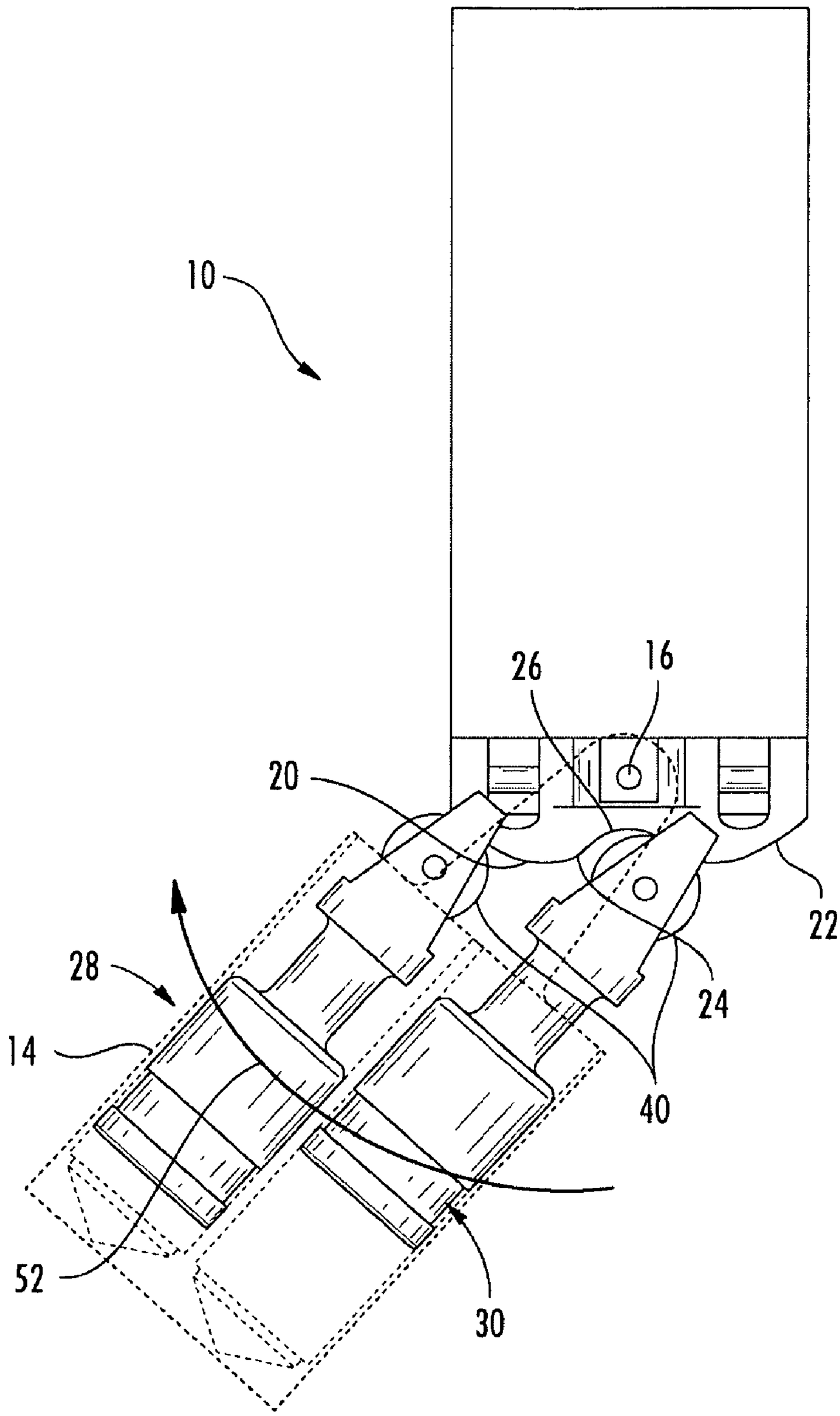

FIG. 1B

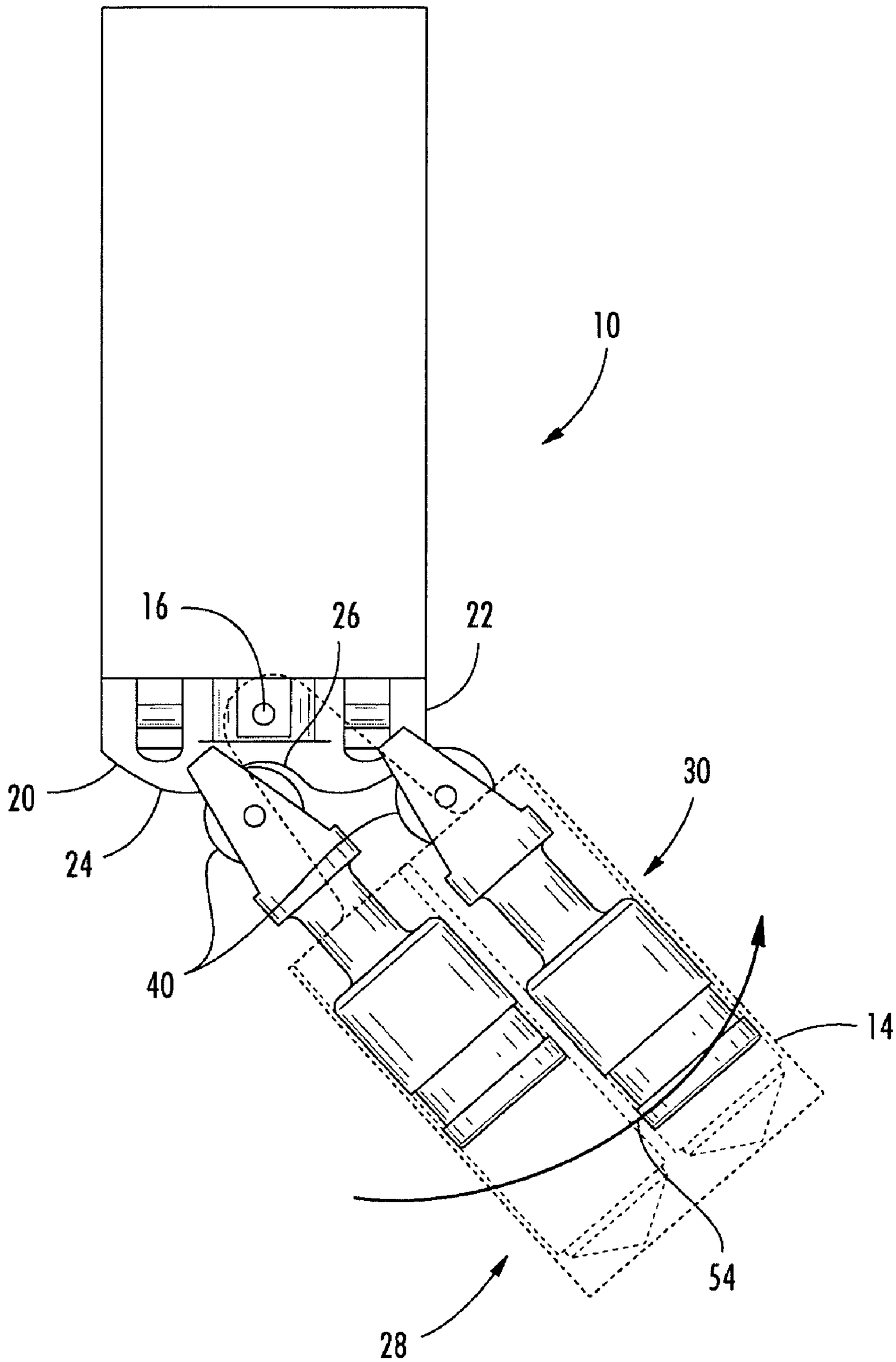

FIG. 1C

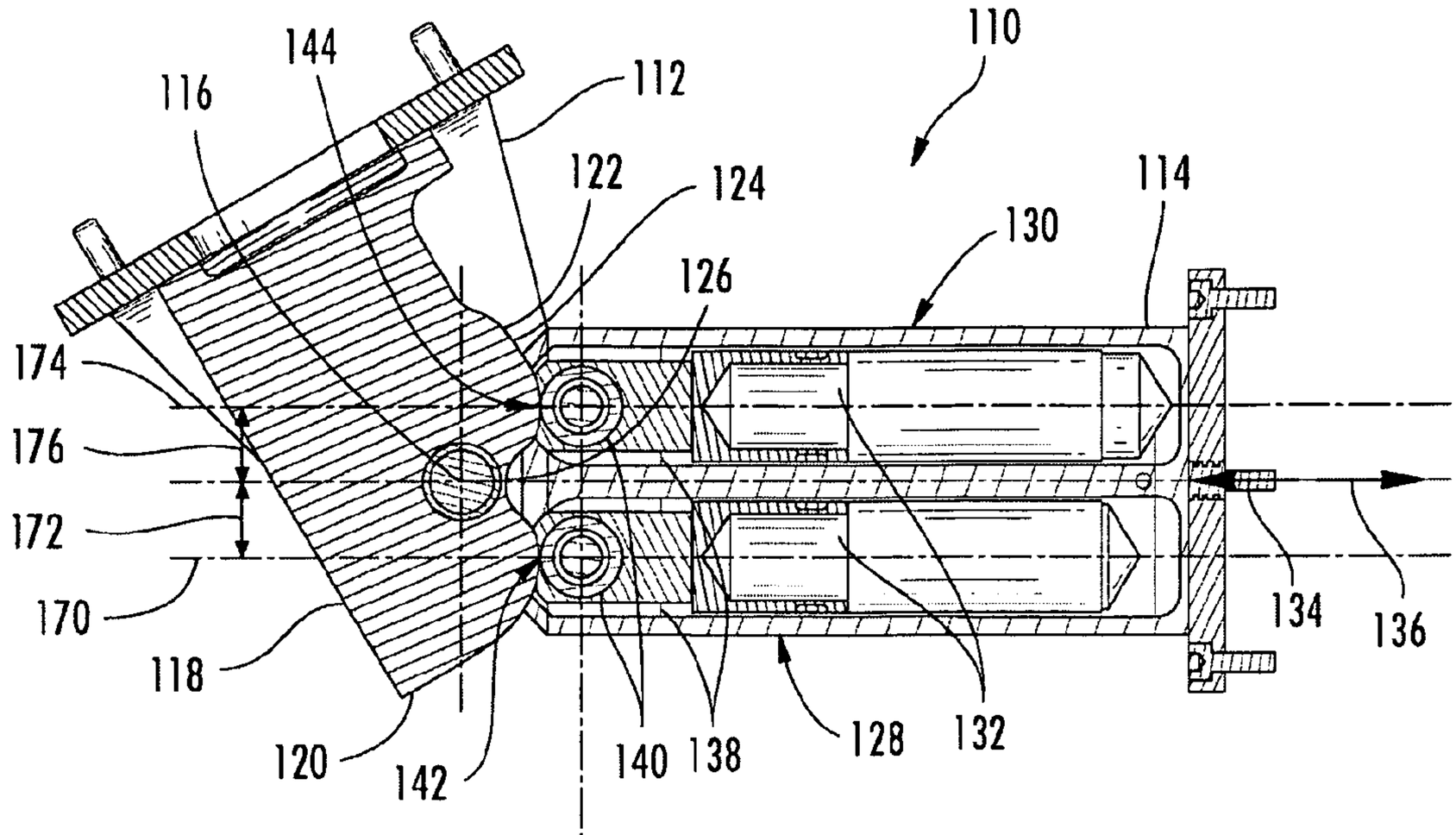
110
144
116
112
122
124
114
130
126
174
176
172
170
118
120
142
140
138
128
132
134
136

FIG. 2A

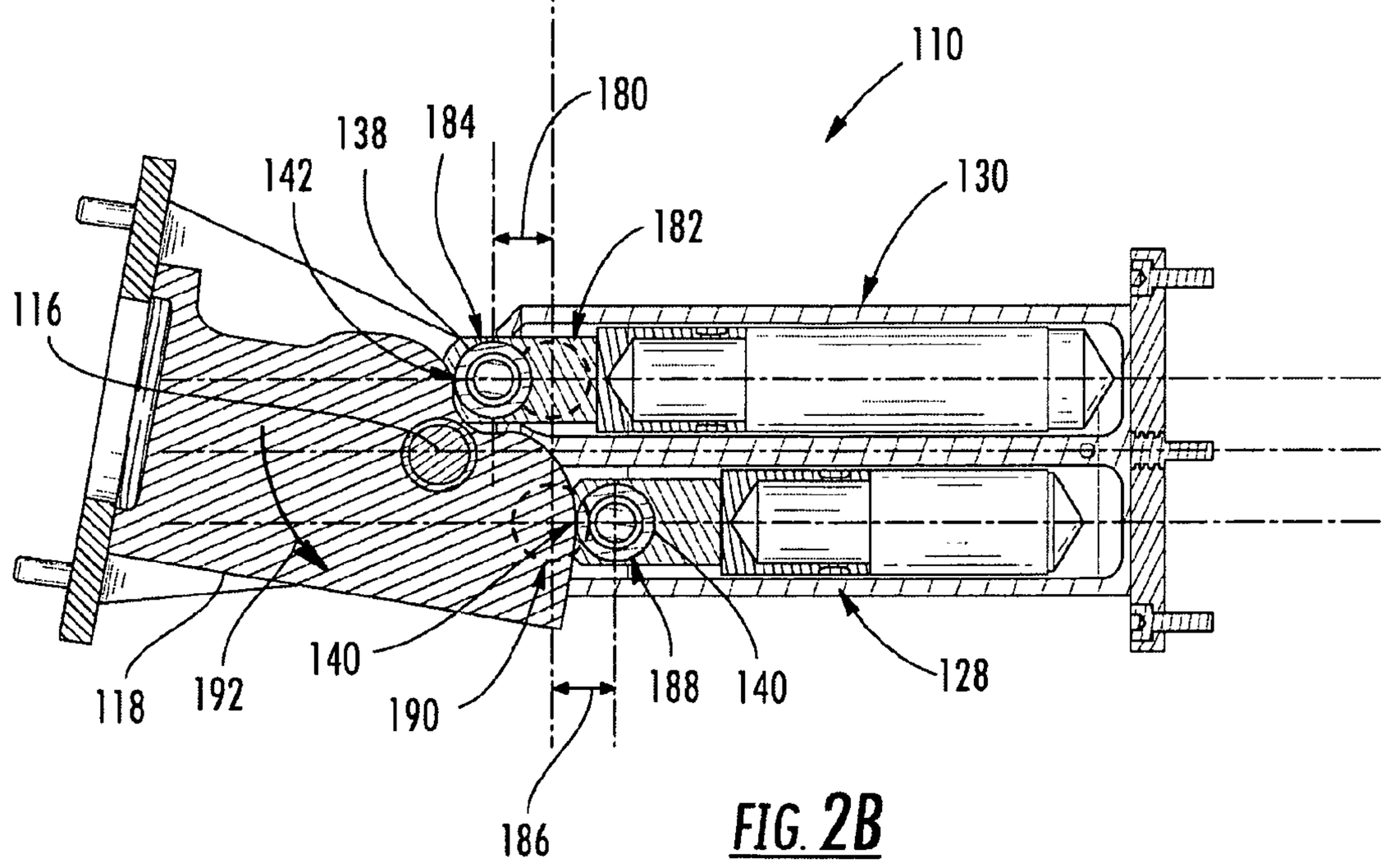
110
180
138
184
142
130
182
116
118
192
140
190
188
140
128
186

FIG. 2B

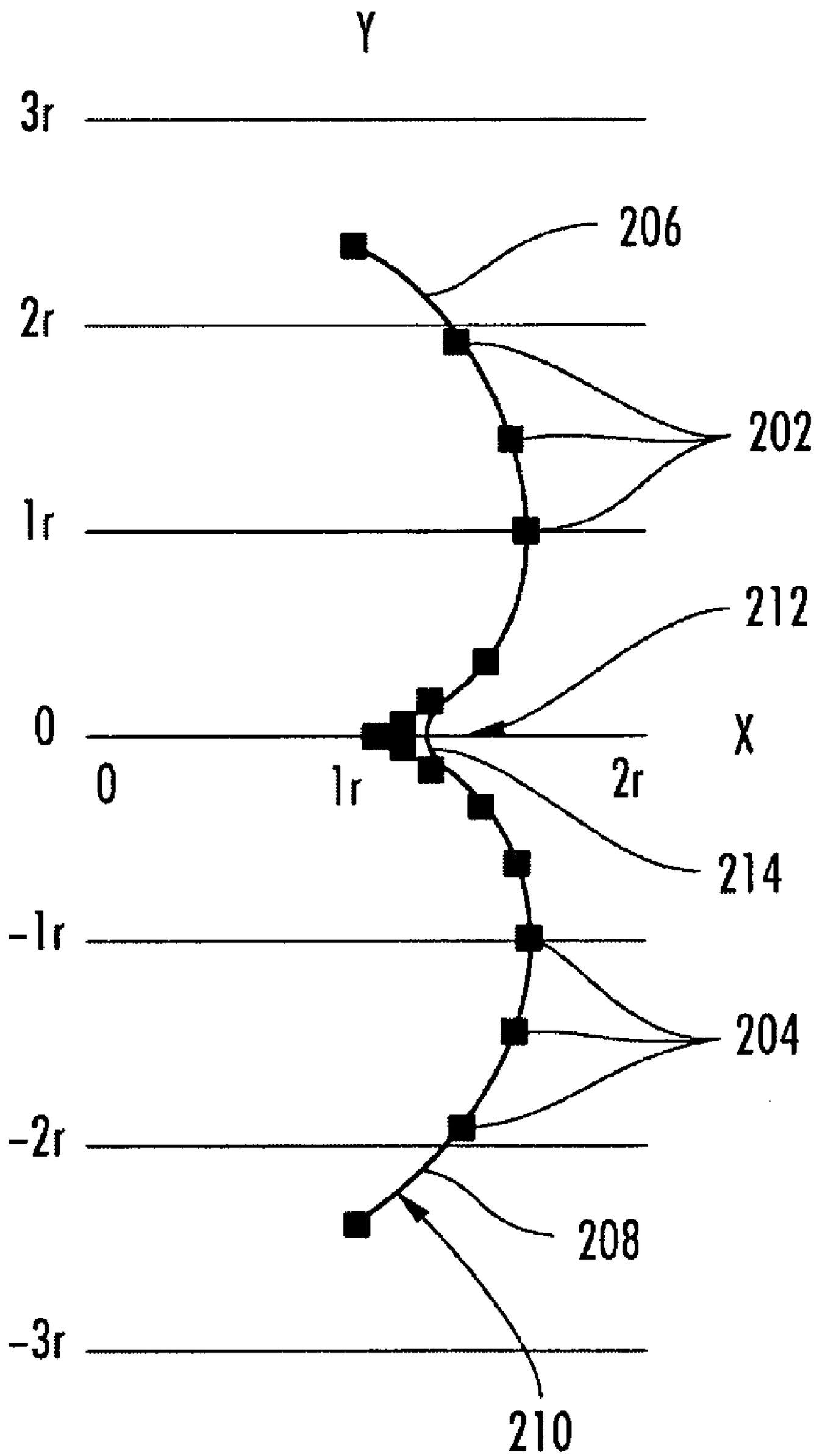

FIG. 3

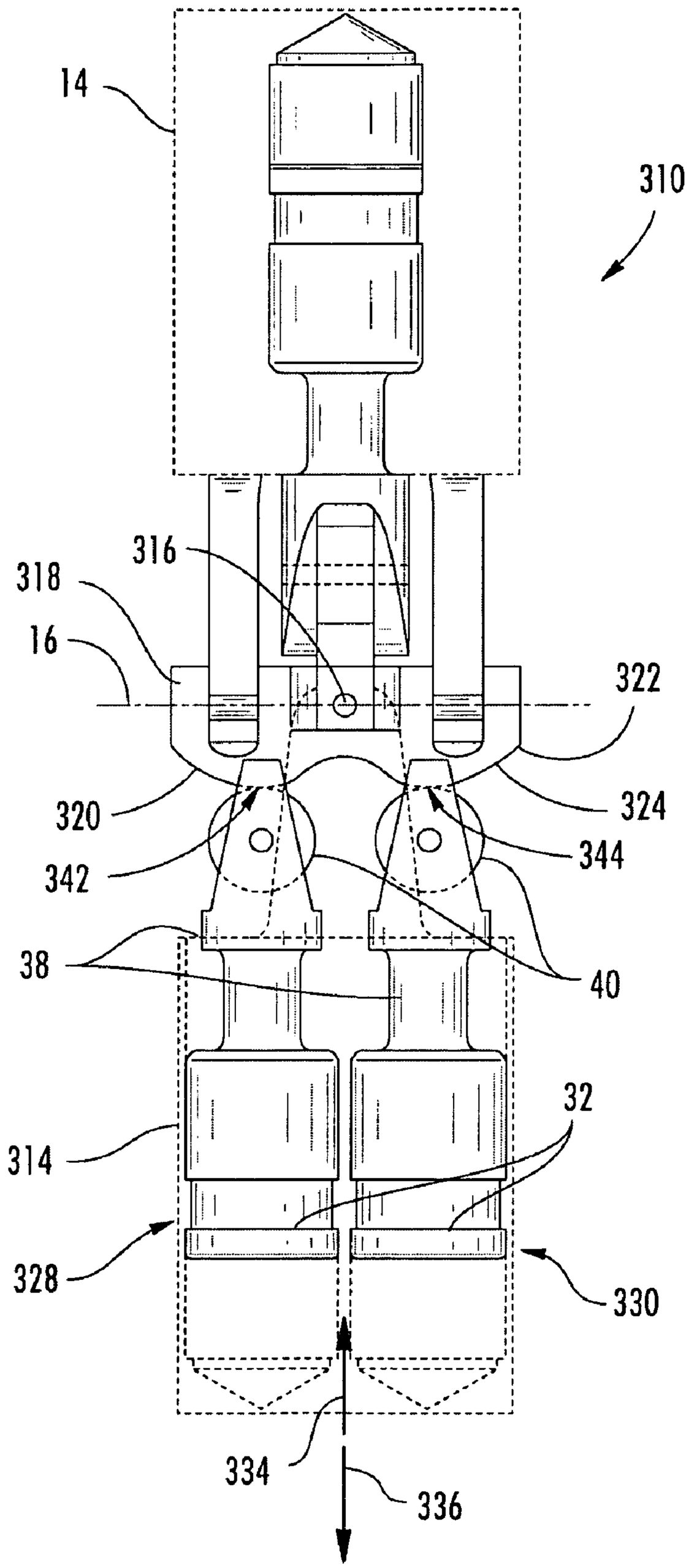

FIG. 4A

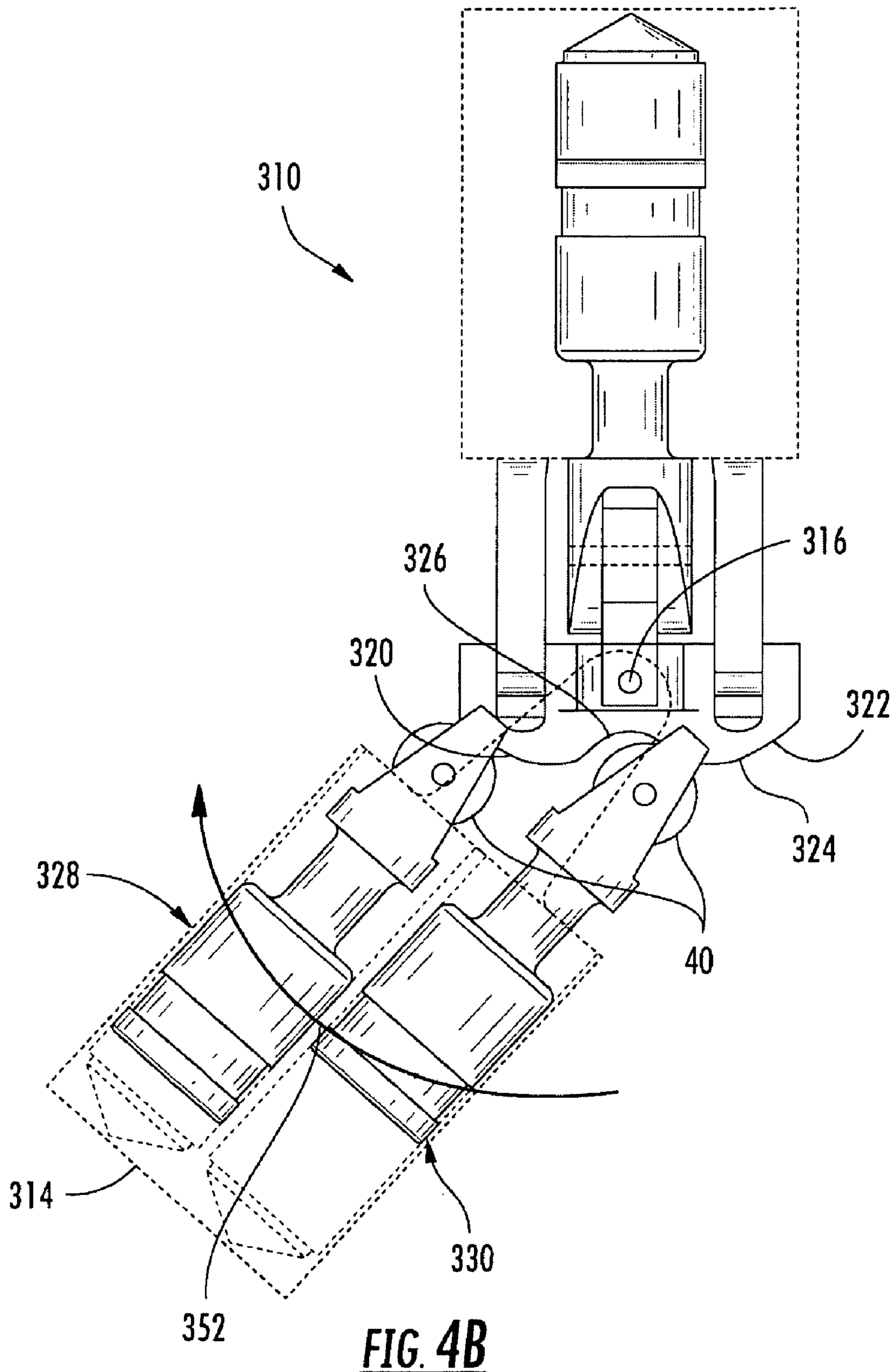

FIG. 4B

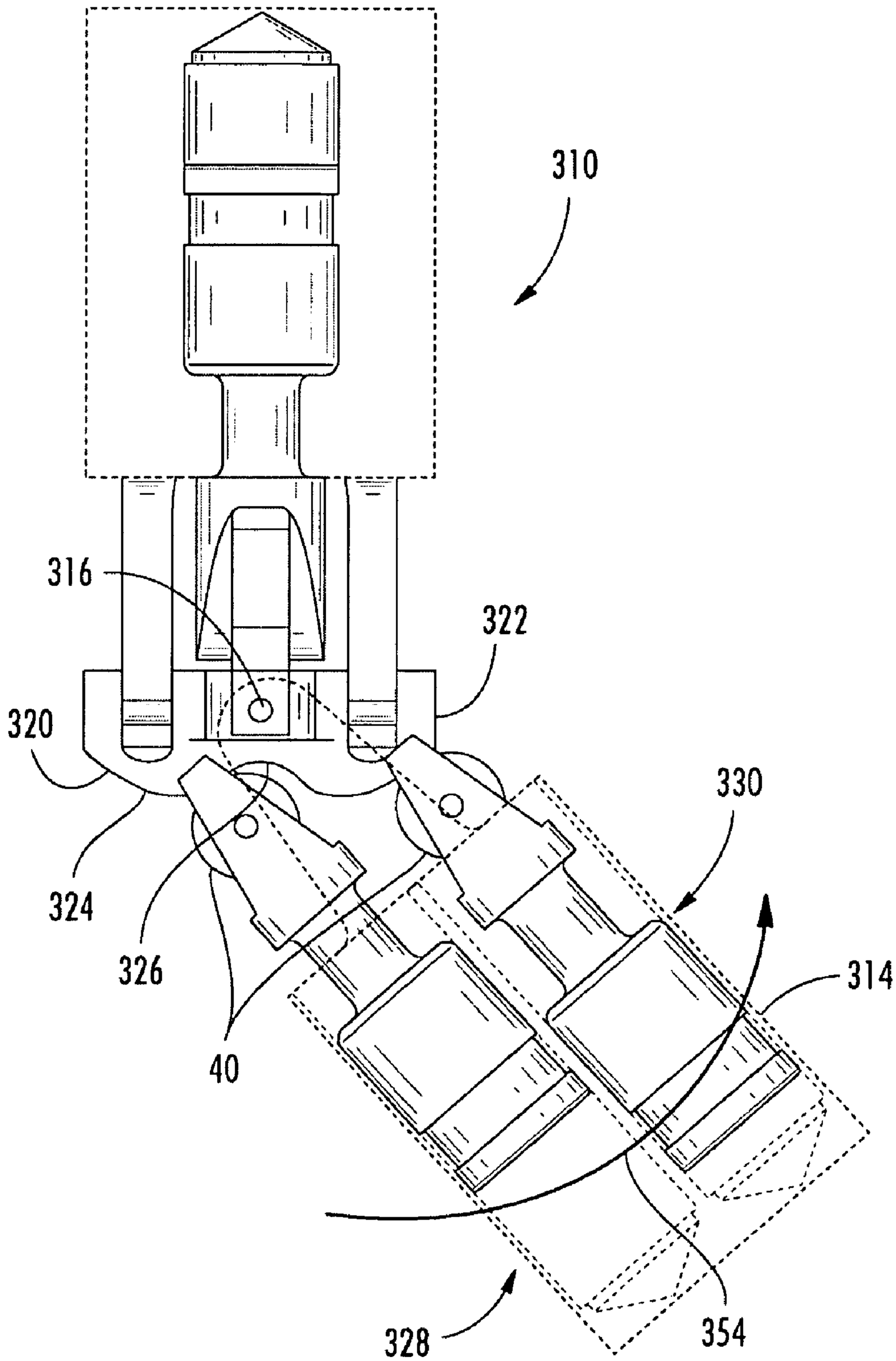

FIG. 4C

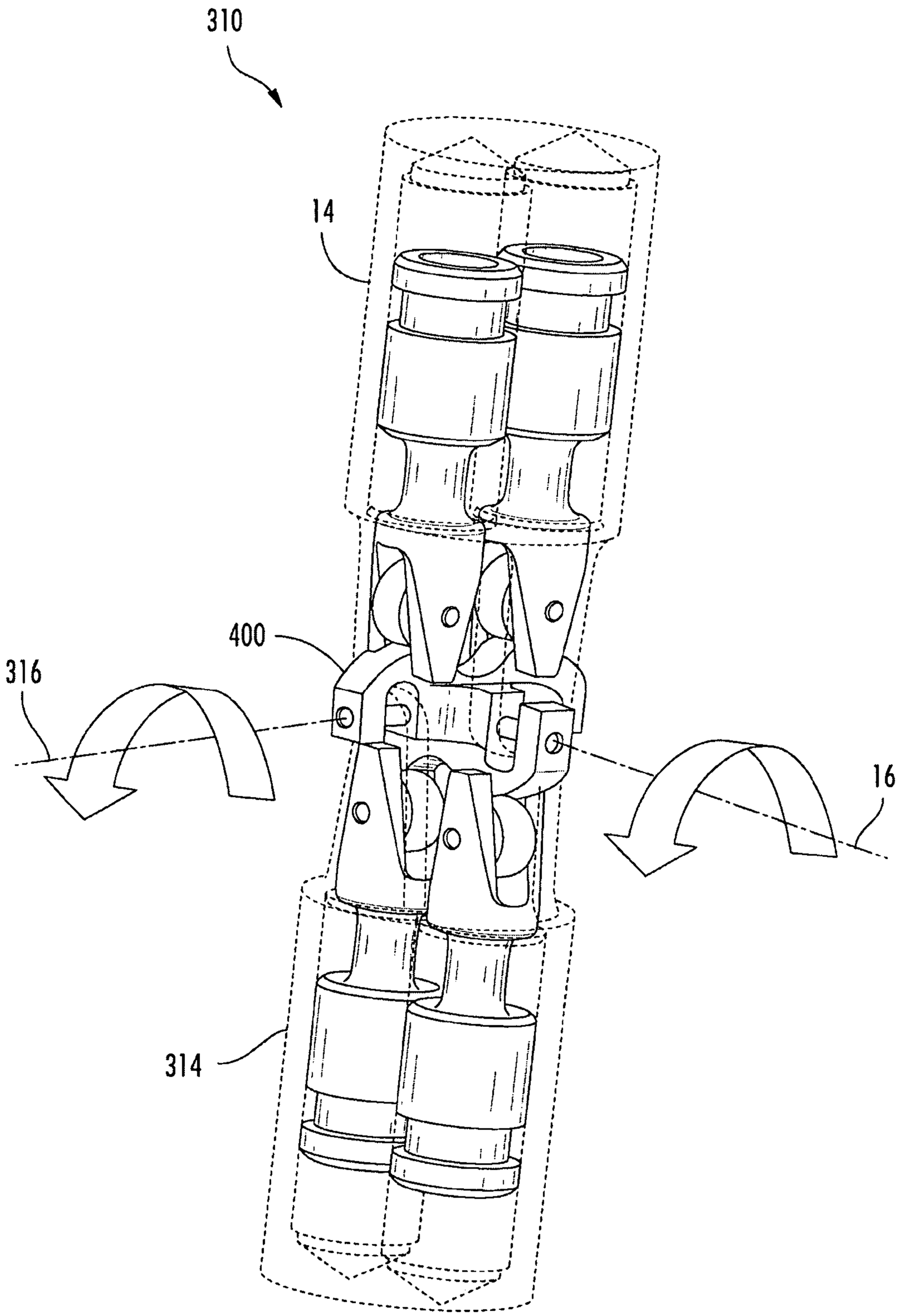

FIG. 5

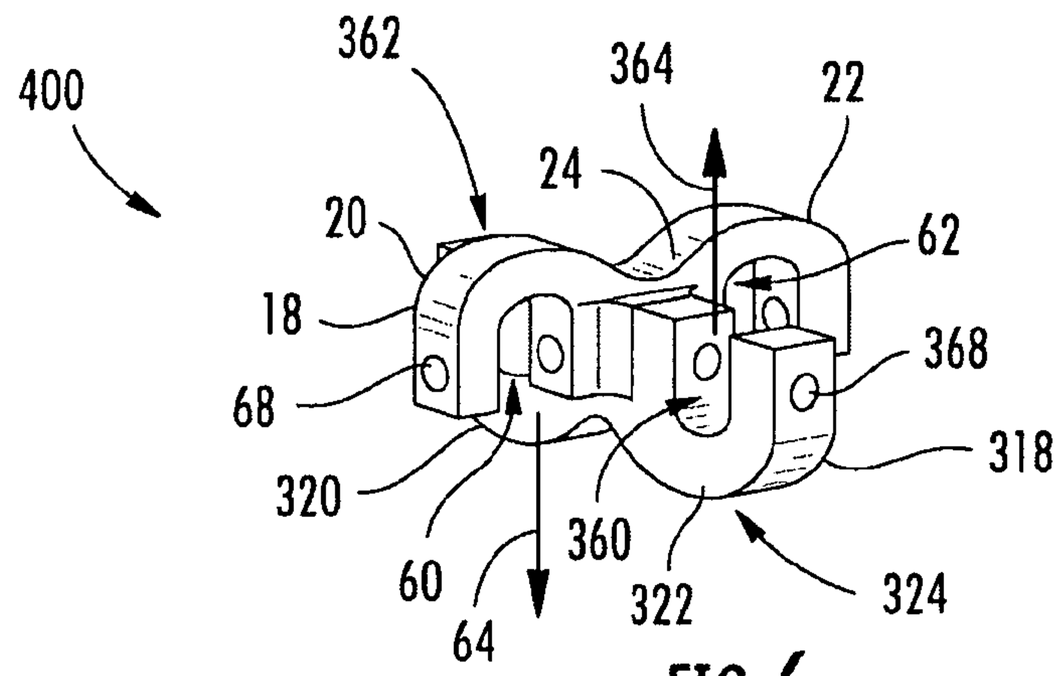

FIG. 6

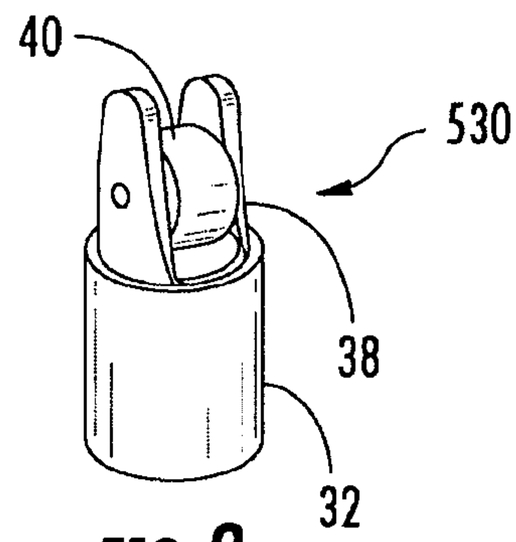

FIG. 8

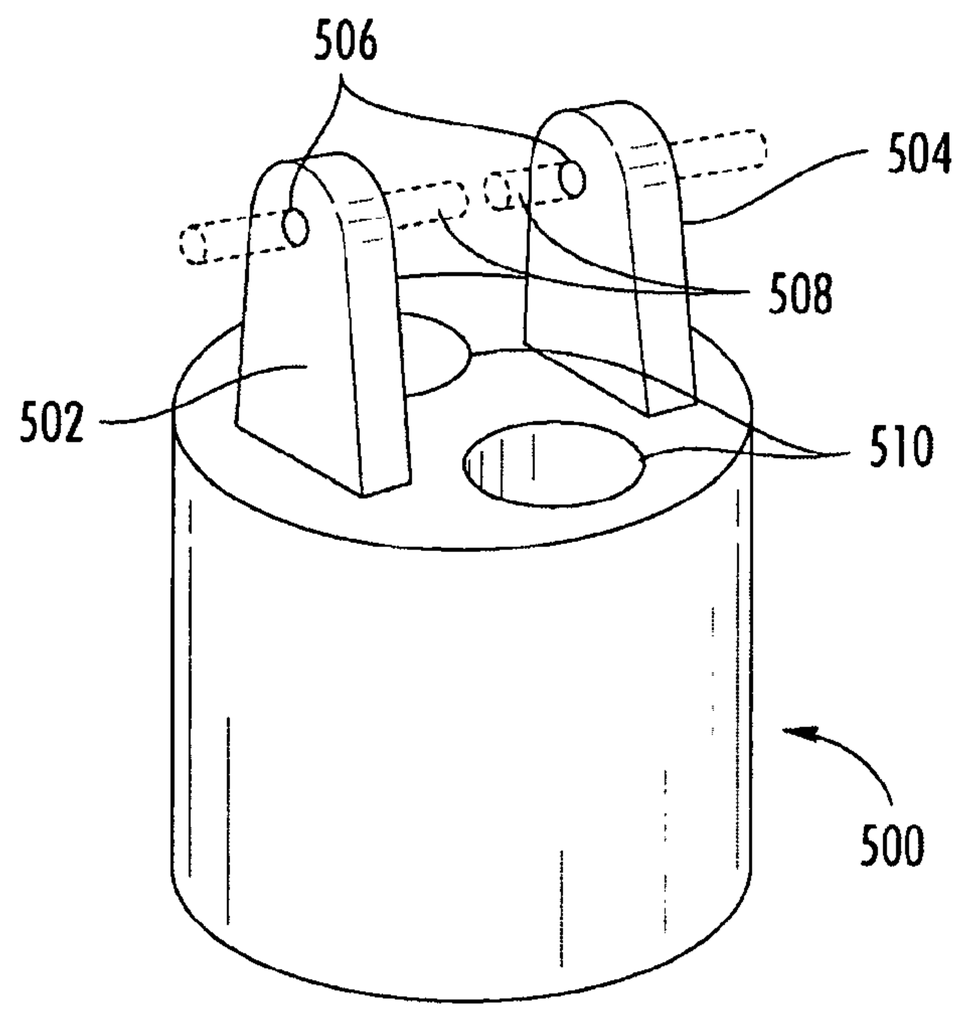

FIG. 7

HYDRAULIC INVOLUTE CAM ACTUATOR

GOVERNMENT RIGHTS

This invention was made with government support under Contract No. DE-AC05-00OR22725 awarded by the U.S. Department of Energy. The government has certain rights in the invention.

FIELD

This disclosure relates to the field of mechanical joints having two coupled members. More particularly, this disclosure relates to mechanical joints that are actuated to change the orientation of the coupled members.

BACKGROUND

Various mechanisms are available to convert linear motion to rotational motion. Examples are ratchets, rack and pinion gears, and cranks. Almost all existing hydraulic manipulators use a slider crank mechanism to transform linear motion from a hydraulic actuator to rotary motion of a joint. There are two specific limitations to this approach. First, motion is generally limited to less than 120° of motion. Second, the transmission ratio (conversion of force to torque) is nonlinear and typically varies from about 2:1 to about 1:1 over the 120° workspace. The limitation of the transmission ratio requires that the actuators be oversized to give a specific torque requirement which adversely impacts the efficiency of a hydraulic system. Also, a slider-crank mechanism typically has a pivoting actuator to compensate for the circular motion of the crank center. Fluid powered actuators thus require some kind of flexible tubing or rotary union to pass fluids in and out of the actuator. These kinds of unions are much less reliable than a fixed porting and usually require considerable space. If, on the other hand, the actuator is not allowed to pivot, then an extra linkage is required to compensate for the circular crank motion. This additional linkage adds complexity and volume. What are needed therefore are more efficient and versatile mechanisms to convert linear motion to rotational motion.

SUMMARY

The present disclosure provides various embodiments of mechanical joints. Typically the mechanical joint has a first coupled member having a first pivot axis. There is a first cam assembly that is operatively secured to the first coupled member. The first cam assembly has a first lobe disposed on a first side of the first pivot axis and a second lobe disposed on a second side of the first pivot axis opposing the first side. The first lobe and the second lobe define a first curved surface having a first depression between the first lobe and the second lobe. Preferably the first curved surface is an involute surface. There is a second coupled member that is configured to rotate around the first pivot axis through a plurality of first axis angular positions. There is a first actuator that is operatively secured to the second coupled member and that is disposed on the first side of the first pivot axis and that has a first extendible rod with a first tip that is engaged with the first curved surface of the first lobe in a series of first contact points on the first curved surface. Each first contact point corresponds to one of the first axis angular positions and each has a first orthogonal distance (that may be a constant or fixed distance) from the first pivot axis. There is a second actuator that is operatively secured to the second coupled member and that is disposed on the second side of the first pivot axis and that has a second extendible rod with a second tip that is engaged with the first curved surface of the second lobe in a series of second contact points on the first curved surface. Each second contact point corresponds to one of the first axis angular positions and each has a second orthogonal distance (that may be a constant or fixed distance) from the first pivot axis. The first and second actuators are configured to rotate the second coupled member with respect to the first coupled member through the plurality of first axis angular positions.

A further embodiment provides a mechanical joint that has a first coupled member having a first pivot axis. There is a first cam assembly that is operatively secured to the first coupled member and that has a first lobe disposed on a first side of the first pivot axis and has a second lobe disposed on a second side of the first pivot axis opposing the first side. The first lobe and the second lobe define a first curved surface having a first depression between the first lobe and the second lobe. There is a second coupled member that is configured to rotate around the first pivot axis through a plurality of first axis angular positions. There is a first actuator that is operatively secured to the second coupled member and that is disposed on the first side of first pivot axis. The first actuator has a first extendible rod with a first tip that is engaged with the first curved surface of the first lobe in a series of first contact points on the first curved surface. Each first contact point corresponds to one of the first axis angular positions. The first actuator has a first thrusting mode and a first relaxing mode and a first thruster trace. There is a second actuator that is operatively secured to the second coupled member and that is disposed on the second side of the first pivot axis. The second actuator has a second extendible rod with a second tip that is engaged with the first curved surface of the second lobe in a series of second contact points on the first curved surface. Each second contact point corresponds to one of the first axis angular positions. The second actuator has a second thrusting mode and a second relaxing mode and a second thruster trace. In this embodiment, when the first actuator is in the first relaxing mode and the second actuator is in the second thrusting mode, the first tip translocates along the first thruster trace and along the first curved surface of the first lobe away from the first depression, and further, the second tip translocates along the second thruster trace and along the first curved surface of the second lobe toward the first depression, while during these translocations the second coupled member rotates around the first pivot axis in a first rotational direction. Furthermore in this embodiment, when the first actuator is in the first thrusting mode and the second actuator is in the second relaxing mode, the first tip translocates along the first thruster trace and along the first curved surface of the first lobe toward the first depression, and further, the second tip translocates along the second thruster trace and along the first curved surface of the second lobe away from the first depression, while during these translocations the second coupled member rotates around the first pivot axis in a second rotational direction that is opposed to the first rotational direction. Further in this embodiment, the first curved surface has a first tangent at each first contact point and has a second tangent at each second contact point and the first tangent at each first contact point is perpendicular to the first thruster trace and the second tangent at each second contact point is perpendicular to the second thruster trace.

BRIEF DESCRIPTION OF THE DRAWINGS

Various advantages are apparent by reference to the detailed description in conjunction with the figures, wherein elements are not to scale so as to more clearly show the

details, wherein like reference numbers indicate like elements throughout the several views, and wherein:

FIGS. **1**A, **1**B, and **1**C are somewhat schematic cross sectional views of a mechanical joint providing angular movement around one pivot axis.

FIGS. **2**A and **2**B are somewhat schematic cross sectional views of a mechanical joint providing angular movement around one pivot axis.

FIG. **3** depicts a curved surface and a loci of points that define the curved surface.

FIGS. **4**A, **4**B, **4**C, and **5** are somewhat schematic cross sectional views of a mechanical joint providing angular movement around two pivot axes.

FIG. **6** is a somewhat schematic perspective view of two cam assemblies.

FIG. **7** is a somewhat schematic perspective view of a coupling.

FIG. **8** is a somewhat schematic perspective view of an actuator.

DETAILED DESCRIPTION

In the following detailed description of the preferred embodiments, reference is made to the accompanying drawings, which form a part hereof, and within which are shown by way of illustration the practice of specific embodiments of mechanical joints. It is to be understood that other embodiments may be utilized, and that structural changes may be made and processes may vary in other embodiments.

One embodiment of a mechanical joint **10** is illustrated in FIGS. **1**A, **1**B, and **1**C. As seen in FIG. **1**A, the mechanical joint **10** includes a first coupled member **12** and a second coupled member **14**. The first coupled member **12** and the second coupled member **14** may be elements of a robotic arm, a prosthesis, or a similar structure where the joint **10** provides relative motion between the first coupled member **12** and the second coupled member **14**. The second coupled member **14** is configured to rotate with respect to the first coupled member **12** around a first pivot axis **16**. It is to be understood that the terms "rotate with respect to" and "relative motion" regarding two elements refers to circumstances where (a) the first element may remain stationary with respect to a coordinate system that is fixed in space and the second element may move with respect to that coordinate system, or (b) the second element may remain stationary with respect to that coordinate system and the first element may move with respect to that coordinate system, or (c) the first element and the second element may both move with respect to that coordinate system.

A first cam assembly **18** is operatively secured to the first coupled member **12**. As used herein, the term "operatively secured" refers to an arrangement of the recited elements that establishes a structural connection between the recited elements, either by direct attachment of the elements together or by connection of the recited elements through one or more intervening elements. Elements that are operatively secured may move with respect to each other unless they are also described as rigidly secured to each other. The first cam assembly **18** includes a first lobe **20** and a second lobe **22** that define a first curved surface **24** with a first depression **26** between the first lobe **20** and the second lobe **22**. The first lobe **20** is disposed on one side of the first pivot axis **16** and the second lobe **22** is disposed on a second (opposing) side of the first pivot axis **16**.

Operatively secured to the second coupled member **14** is a first actuator **28** and a second actuator **30**. The first actuator **28** and the second actuator **30** each include pistons **32** that are each configured to move in a thrusting direction **34** and a relaxing direction **36**. The first actuator **28** and the second actuator **30** each have a rod **38** and each rod **38** has a roller **40**. The rollers **40** are examples of "tips" of the actuators. In some embodiments a tip may be a pointed portion of a rod (**38**), but a roller (e.g., **40**) is generally the preferred form of a tip for an actuator because a roller generally results in less friction with the curved surface (e.g., **24**) of a cam assembly (e.g., **18**). The roller **40** on the first actuator **28** engages the first curved surface **24** of the first lobe **20** of the first cam assembly **18** at a first contact point **42**, and the roller **40** on the second actuator **30** engages the first curved surface **24** of the second lobe **22** of the first cam assembly **18** at a second contact point **44**. The first contact point **42** and the second contact point **44** are relocated on the first curved surface **24** through a series of first contact points **42** and second contact points **44** as the first coupled member **12** and the second coupled member **14** rotate with respect to each other around the first pivot axis **16**.

The first actuator **28** and the second actuator **30** each have a "thrusting mode" and a "relaxing mode." The thrusting mode is a configuration where force is applied to the rod (e.g., rod **38**) of the actuator in thrusting direction **34**. The relaxing mode is a configuration where the rod (e.g., rod **38**) is not impeded from motion in either the thrusting direction **34** or the relaxing direction **36**. For example, typically the actuators are activated by hydraulic pressure, and as illustrated in FIG. **1**A, when an actuator is configured in the thrusting mode, pressurized hydraulic fluid is applied in a chamber **50** behind the corresponding piston **32**. When an actuator is configured to be in the relaxing mode, hydraulic fluid is allowed to flow at least unimpeded (and optionally assisted by suction) out of the chamber **50**. Similar principles apply if the actuators are powered by pneumatics, solenoids or other power sources.

Typically, when the first actuator **28** is configured to be in the thrusting mode, the rod (e.g., **38**) of the first actuator moves in the thrusting direction **34** while at the same time the second actuator **30** is configured to be in the relaxing mode and the rod (e.g., **38**) of the second actuator **30** moves in the relaxing direction **36**. Typically, when the second actuator **28** is configured to be in the thrusting mode, the rod (e.g., **38**) of the second actuator **30** moves in the thrusting direction while at the same time the first actuator is configured to be in the relaxing mode and the rod (e.g., **38**) of the first actuator **28** moves in the relaxing direction **36**.

FIG. **1**B depicts a configuration of the mechanical joint **10** where the first actuator **28** has been placed in the relaxing mode and the second actuator **30** has been placed in the thrusting mode. In this configuration a first tip (i.e., the roller **40** of the first actuator **28**) translocates along the first curved surface **24** of the first lobe **20** away from the first depression **26** and a second tip (i.e., the roller **40** of the second actuator **30**) translocates along the first curved surface **24** of the second lobe **22** toward the first depression **26** as the second coupled member **14** rotates with respect to the first coupled member **12** around the first pivot axis **16** in a first rotational direction **52**.

FIG. **1**C depicts a configuration of the mechanical joint **10** where the first actuator **28** has been placed in the thrusting mode and the second actuator **30** has been placed in the relaxing mode. In this configuration the first tip (i.e., the roller **40** of the first actuator **28**) translocates along the first curved surface **24** of the first lobe **20** toward the first depression **26** and the second tip (i.e., the roller **40** of the second actuator **30**) translocates along the first curved surface **24** of the second lobe **22** away from the first depression **26** as the second coupled member **14** rotates with respect to the first coupled

member **12** around the first pivot axis **16** in a second rotational direction **54** that is opposed to the first rotational direction **52**.

A further embodiment of a mechanical joint **110** is illustrated in FIGS. **2**A and **2**B. As seen in FIG. **2**A, the mechanical joint **110** includes a first coupled member **112** and a second coupled member **114**. The second coupled member **114** is configured to rotate with respect to the first coupled member **112** around a first pivot axis **116**. A cam assembly **118** is operatively secured to the first coupled member **112**. The cam assembly **118** includes a first lobe **120** and a second lobe **122** that define a curved surface **124** with a depression **126** between the first lobe **120** and the second lobe **122**. The first lobe **120** is disposed on one side of the first pivot axis **116** and the second lobe **122** is disposed on a second (opposing) side of the first pivot axis **116**.

Operatively secured to the second coupled member **114** is a first actuator **128** and a second actuator **130**. The first actuator **128** and the second actuator **130** each include pistons **132** that are each configured to move in a thrusting direction **134** and a relaxing direction **136**. The first actuator **128** and the second actuator **130** each have a rod **138** and each rod **138** has a roller **140**. The roller **140** on the first actuator **128** engages the curved surface **124** of the first lobe **120** of the cam assembly **118** at a first contact point **142**, and the roller **140** on the second actuator **130** engages the curved surface **124** of the second lobe **122** of the cam assembly **118** at a second contact point **144**. The first contact point **142** and the second contact point **144** are relocated on the first curved surface **124** as the first coupled member **112** and the second coupled member **114** rotate with respect to each other around the first pivot axis **116**.

As the first actuator **128** reconfigures between (a) a thrusting mode and (b) a relaxing mode, the first actuator **128** moves in the thrusting direction **134** and in the relaxing direction **136** (respectively) along a first thruster trace **170**. At its point of closest proximity to the first pivot axis **116** the first thruster trace **170** is a first orthogonal distance **172** from the first pivot axis **116**. As the second actuator **130** reconfigures between (a) a thrusting mode and (b) a relaxing mode, the second actuator **130** moves in the thrusting direction **134** and the relaxing direction **136** (respectively) along a second thruster trace **174**. At its point of closest proximity to the first pivot axis **116** the second thruster trace **174** is a second orthogonal distance **176** from the first pivot axis **116**. Typically the first orthogonal distance **172** and the second orthogonal distance **176** are configured to be substantially equal distances, and the symbol "r" is used herein to refer to that distance. When different or potentially different orthogonal distances (e.g., **172** and **176**) are referred to herein they are designated as "r_i," "r_j," etc.

FIG. **2**B illustrates a configuration of the mechanical joint **110** where (as compared with FIG. **2**A) the second actuator **130** has been configured in a thrusting mode and the first actuator **128** has been configured in a relaxing mode. As a result of these configuration changes, the roller **140** of the second actuator **130** has moved along second thruster trace **174** a second relocation distance **180**, from a position **182** to a position **184**. The roller **140** of the first actuator **128** has moved along the first thruster trace **172** a first relocation distance **186** from a position **188** to a position **190**. As a consequence of these movements of these rollers **140** the first coupled member **118** has rotated around the first pivot axis **116** through an angle **192**.

Several benefits are achieved from the configuration of FIGS. **2**A and **2**B. First, the curved surface **124** is configured such that there is a first tangent to the curved surface **124** at each first contact point **142** with the roller **140** of the first actuator **128**, and a second tangent at each second contact point **144** of the roller **140** of the second actuator **130**, and the first tangent at each first contact point **142** is perpendicular to the first thruster trace **170** and the second tangent at each second contact point **144** is perpendicular to the second thruster trace **174**. These perpendicular positions keep the side loads on the actuators **128** and **130** very low, and reduces friction between the rollers **140** and the curved surface **124**.

Second, because the orthogonal distances **172** and **176** are constant through the range of motion of the actuators **128** and **130**, the torque applied to the first coupled member **118** by the actuators **128** and **130** is linearly proportional to the difference between the forces applied by their respective pistons **132**. For example, if the piston **132** of the second actuator **130** applies F1 lbs. of force and the piston **132** of the first actuator **128** applies F2 lbs. of force, and the first orthogonal distance **172** and the second orthogonal distance **176** are both a constant or fixed "r" ft., then the torque applied to the first coupled member **118** is given by Equation 1.

$$\text{Torque}=r*(F1-F2)\ \text{ft.-lbs.} \qquad \text{(Eq'n 1)}$$

The relationship of Equation 1 leads to a related benefit. Namely, the torque applied to a joint may be measured simply by putting strain gages on each of the actuators, and converting strain to stress force, and then (by knowing "r,") the torque can be calculated.

A third benefit of the configuration of FIGS. **2**A and **2**B is that, because of the shape of the curved surface **124** (and because the first orthogonal distance **172** is substantially equal to the second orthogonal distance **176**), as the first coupled member **118** rotates around the first pivot axis **116**, the first relocation distance **186** in this embodiment is always substantially equal to the second relocation distance **180**. Then if the pistons **132** are the same size, a hydraulic system may be configured to simultaneously extract the same amount of hydraulic fluid from one actuator as is being injected into the other actuator. Furthermore, if in this configuration the hydraulic lines between the first and second actuators (**128** and **130**) are interconnected so that the pressure is substantially equalized on both pistons **132**, the net torque is zero and the first coupled member **118** rotates substantially freely (with only friction-like forces affecting the movement).

A fourth benefit of the configuration is that the actuators do not need to pivot. This eliminates the need for potentially unreliable flexible tubing or rotary unions to carry fluid to the cylinder and reduces space requirements.

A fifth benefit of the configuration is that, because the design makes use of a pair of antagonistic actuators, any mechanical backlash in the system is automatically removed. Typical slider-cranks are push-pull arrangements where clearances in the connecting link pins or pivots introduce backlash or free play. Even a small amount of backlash is very detrimental to precise positioning and smooth control.

In the embodiment of FIGS. **2**A and **2**B, where the first orthogonal distance **172** and the second orthogonal distance **176** are a constant or fixed value "r," the curved surface is configured to conform at least in part to a loci of (x_i,y_i) points that vary through a varying rotational angle "θ" (i.e., different θ_i's) and are defined by Equation 2 and Equation 3.

$$x_i=r*(\cos(\theta_i)+\theta_i*\sin(\theta_i)) \qquad \text{(Eq'n 2)}$$

$$y_i=r*(\sin(\theta_i)-\theta_i*\cos(\theta_i)) \qquad \text{(Eq'n 3)}$$

When different or potentially different loci of points and or rotational angles are referred to herein they are designated as x_i, y_i, x_j, y_j etc. and θ_i, θ_j, etc.

Table 1 provides exemplary values for a loci of points calculated according to Equation 1 and Equation 2.

TABLE 1

Θ_i - degrees	Θ_i - radians	x_i/r	y_i/r
135	2.35619449	0.958974	2.373188
120	2.094395102	1.313799	1.913223
105	1.832595715	1.511332	1.440236
90	1.570796327	1.570796	1
75	1.308996939	1.523213	0.627132
60	1.047197551	1.4069	0.342427
45	0.785398163	1.262467	0.151746
30	0.523598776	1.127825	0.04655
15	0.261799388	1.033684	0.00594
0	0	1	0
−15	−0.261799388	1.033684	−0.00594
−30	−0.523598776	1.127825	−0.04655
−45	−0.785398163	1.262467	−0.15175
−60	−1.047197551	1.4069	−0.34243
−75	−1.308996939	1.523213	−0.62713
−90	−1.570796327	1.570796	−1
−105	−1.832595715	1.511332	−1.44024
−120	−2.094395102	1.313799	−1.91322
−135	−2.35619449	0.958974	−2.37319

FIG. **3** illustrates a plot of a first loci **202** and a second loci **204** of values taken from Table 1. The first loci **202** define a first lobe **206** and the second loci **204** define a second lobe **208** of a cam assembly for a mechanical joint. The first lobe **206** and the second lobe **208** define a curved surface **210** with a depression **212** between the first lobe **206** and the second lobe **208**. Equations 2 and 3 are derived for configurations where the tips of the actuators are zero-dimension points. To accommodate tips that have a non-zero-dimension feature (such as the rollers **140** of FIGS. **2**A and **2**B) a fairing surface **214** may be provided in the area of y=0. A configuration that has a curved surface like curved surface **210** that combines loci of points (e.g., **202** and **204**) from Equations 2 and 3 with a fairing surface (e.g. **214**) is referred to herein as a curved surface that conforms at least in part to a loci of (x,y) points given by Equations 2 and 3.

FIGS. **4**A, **4**B, and **4**C illustrate a mechanical joint **310** providing angular movement around two pivot axes. These axes may intersect or they may have an offset. As seen in FIG. **4**A, the mechanical joint **310** includes the second coupled member **14** of FIGS. **1**A, **1**B, and **1**C. The second coupled member **14** (in terms of how it is illustrated in FIG. **4**A) has been turned upside down and rotated 90 degrees about an axis parallel with the thrusting direction and relaxing direction depicted in FIG. **1**A. In the mechanical joint **310** the second coupled member **14** replaces the first coupled member **12** of the mechanical joint **10** of FIG. **1**A. The mechanical joint **310** incorporates a third coupled member **314** that is configured to rotate with respect to the second coupled member **14** around a second pivot axis **316** that is orthogonal to the first pivot axis **16**.

A second cam assembly **318** is operatively secured to the second coupled member **14**. The second cam assembly **318** includes the first cam assembly **18** of FIG. **1**, plus a third lobe **320** and a fourth lobe **322** that define a second curved surface **324** having a depression **326** between the third lobe **320** and the second lobe **324**. The third lobe **320** is disposed on one side of the second pivot axis **316** and the fourth lobe **322** is disposed on a second (opposing) side of the second pivot axis **316**.

Operatively secured to the third coupled member **314** is a third actuator **328** and a fourth actuator **330**. The third actuator **328** and the fourth actuator **330** each include pistons **32** that are each configured to move in a thrusting direction **334** and a relaxing direction **336**. The third actuator **328** and the fourth actuator **330** each have a rod **38** and each rod **38** has a roller **40**. The roller **40** on the third actuator **328** engages the second curved surface **324** of the third lobe **320** of the second cam assembly **18** at a first contact point **342**, and the roller **40** on the fourth actuator **330** engages the second curved surface **324** of the fourth lobe **322** of the second cam assembly **18** at a second contact point **344**. The first contact point **342** and the second contact point **344** are relocated on the first curved surface **324** as the second coupled member **14** and the third coupled member **314** rotate with respect to each other around the second pivot axis **316**.

The third actuator **328** and the fourth actuator **330** each have a thrusting mode and a relaxing mode. The thrusting mode is a configuration where force is applied to the rod (e.g., rod **38**) of the actuator in thrusting direction **334**. The relaxing mode is a configuration where the rod (e.g., rod **38**) is not impeded from motion in either the thrusting direction **334** or the relaxing direction **336**.

FIG. **4**B depicts a configuration of the mechanical joint **310** where the third actuator **328** has been placed in the relaxing mode and the fourth actuator **330** has been placed in the thrusting mode. In this configuration a first tip (i.e., the roller **40** of the third actuator **328**) translocates along the second curved surface **324** of the third lobe **320** away from the depression **326** and a second tip (i.e., the roller **40** of the fourth actuator **330**) translocates along the second curved surface **324** of the fourth lobe **322** toward the depression **326** as the third coupled member **314** rotates around the second pivot axis **316** in a third rotational direction **352**.

FIG. **4**C depicts a configuration of the mechanical joint **310** where the third actuator **328** has been placed in the thrusting mode and the fourth actuator **330** has been placed in the relaxing mode. In this configuration the first tip (i.e., the roller **40** of the first actuator **328**) translocates along the second curved surface **324** of the third lobe **320** toward the depression **326** and the second tip (i.e., the roller **40** of the fourth actuator **330**) translocates along the second curved surface **324** of the fourth lobe **322** away from the depression **326** as the third coupled member **314** rotates around the second pivot axis **316** in a fourth rotational direction **354** that is opposed to the third rotational direction **352**.

FIG. **5** depicts a perspective view of the mechanical joint **310** of FIG. **4**A. FIG. **5** illustrates second coupled member **14**, third coupled member **314**, the first pivot axis **16** and the second pivot axis **316**. FIG. **5** also illustrates how the first cam assembly **18** of FIGS. **1**A, **1**B, and **1**C and the second cam assembly **318** of FIGS. **4**A, **4**B, and **4**C may be combined to form a "spider" **400**. The first pivot axis **16** and second pivot axis **316** may intersect or may have an offset.

FIG. **6** depicts a perspective view of the spider **400**. The first cam assembly **18** and the second cam assembly **318** are each characterized as a "dual arch-shaped member." As used herein, the term "arch-shaped" refers to a member having a concave arch-shaped surface inside a convex arch-shaped surface, and the term "dual arch-shaped member" refers to a configuration of two arch-shaped members disposed side by side in substantially the same geometric plane. As seen in FIG. **6**, a convex arch-shaped surface of a dual arched-shaped member forms the curved surface **24** of the first lobe **20** and the second lobe **22** of the first dual arch-shaped member (first cam assembly **18**). A convex arch-shaped surface of a dual arch-shaped member forms the curved surface **324** of the third lobe **320** and the fourth lobe **322** of the second arch-shaped member (second cam assembly **318**). A concave arch-shaped portion of the first dual arched member (first cam assembly **18**) provides a first opening **60** and a second open-

ing **62** having a first open direction **64**. A concave arch-shaped portion of the second dual arched member (second cam assembly **318**) provides a first opening **360** and a second opening **362** having a second open direction **364** that is opposed to the first open direction **64**. As seen in FIG. **6**, the first dual arch-surfaced member (first cam assembly **18**) and the second dual arch-shaped member (second cam assembly **318**) are joined orthogonally at their midpoints in a configuration wherein the first open direction (**64**) is opposed to the second open direction **364**.

FIG. **7** depicts a coupling **500** that may be used in a coupled member of a mechanical joint (such as mechanical joint **310** of FIGS. **4**A, **4**B, and **4**C). The coupling **500** includes two tabs **502** and **504**, each of which has a first mounting hole **506**. The first tab **504** is configured for insertion in the first opening **60** of the first cam assembly **18** of FIG. **6**, and the second tab **506** is configured for insertion in the second opening **62** of the first cam assembly **18**. The first mounting holes **506** are configured to align with corresponding first mounting holes **68** of the first cam assembly **18**, wherein the coupling **500** and the spider **400** may be operatively secured to each other using pins **508** (depicted in FIG. **7**). The pins **508** establish the first pivot axis **16** depicted in FIGS. **4**A and **5**. The second cam assembly **318** of FIG. **6** also provides second mounting holes **368** for joining a second coupling **500** (inverted from the orientation of that element that is depicted in FIG. **7**) to the spider **400** of FIG. **6** using further pins **508**. The further pins **508** establish the second pivot axis **316** depicted in FIGS. **4**A and **5**.

The coupling **500** of FIG. **7** further includes hollow cylinders **510** each of which is configured for insertion of an actuator **530** of FIG. **8**. The actuator **530** of FIG. **8** is an example of a device that may be used as the actuators **28**, **30**, **128**, **130**, **328**, and **330** described previously herein. The actuator **530** includes a piston **32**, a rod **38**, and a roller **42**.

In summary, embodiments disclosed herein describe various features of mechanical joints. The foregoing descriptions of embodiments have been presented for purposes of illustration and exposition. They are not intended to be exhaustive or to limit the embodiments to the precise forms disclosed. Obvious modifications or variations are possible in light of the above teachings. The embodiments are chosen and described in an effort to provide the best illustrations of principles and practical applications, and to thereby enable one of ordinary skill in the art to utilize the various embodiments as described and with various modifications as are suited to the particular use contemplated. All such modifications and variations are within the scope of the appended claims when interpreted in accordance with the breadth to which they are fairly, legally, and equitably entitled.

What is claimed is:

1. A mechanical joint comprising:

a first coupled member having a first pivot axis;

a first cam assembly operatively secured to the first coupled member and having a first lobe disposed on a first side of the first pivot axis and a second lobe disposed on a second side of the first pivot axis opposing the first side, the first lobe and the second lobe defining a first curved surface having a first depression between the first lobe and the second lobe;

a second coupled member configured to rotate around the first pivot axis through a plurality of first axis angular positions;

a first actuator operatively secured to the second coupled member and disposed on the first side of first pivot axis and having a first extendible rod with a first tip that is engaged with the first curved surface of the first lobe in a series of first contact points on the first curved surface, each first contact point corresponding to one of the first axis angular positions and each having a first orthogonal distance from the first pivot axis; and

a second actuator operatively secured to the second coupled member and disposed on the second side of the first pivot axis and having a second extendible rod with a second tip that is engaged with the first curved surface of the second lobe in a series of second contact points on the first curved surface, each second contact point corresponding to one of the first axis angular positions and each having a second orthogonal distance from the first pivot axis; wherein

the first actuator and the second actuator are configured to cause rotation of the second coupled member with respect to the first coupled member through the plurality of first axis angular positions.

2. The mechanical joint of claim **1** wherein the first orthogonal distance and the second orthogonal distance each are a value "r_1" and the first curved surface conforms at least in part to a loci of (x_i,y_i) points that vary through a varying rotational angle "θ_i" and are defined by: $x_i=r_1*(\cos(\theta_i)+\theta_i*\sin(\theta_i))$, $y_i=r_1*(\sin(\theta_i)-\theta_i*\cos(\theta_i))$.

3. The mechanical joint of claim **1** wherein:

the first actuator has a first thrusting mode and a first relaxing mode and a first thruster trace;

the second actuator has a second thrusting mode and a second relaxing mode and a second thruster trace; and

when the first actuator is in the first relaxing mode and the second actuator is in the second thrusting mode, the first tip translocates along the first thruster trace and along the first curved surface of the first lobe away from the first depression and the second tip translocates along the second thruster trace and along the first curved surface of the second lobe toward the first depression as the second coupled member rotates around the first pivot axis in a first rotational direction; and

when the first actuator is in the first thrusting mode and the second actuator is in the second relaxing mode, the first tip translocates along the first thruster trace and along the first curved surface of the first lobe toward the first depression and the second tip translocates along the second thruster trace and along the first curved surface of the second lobe away from the first depression as the second coupled member rotates around the first pivot axis in a second rotational direction that is opposed to the first rotational direction; wherein

the first curved surface has a first tangent at each first contact point and has a second tangent at each second contact point, and at each first contact point the first tangent is perpendicular to the first thruster trace, and at each second contact point the second tangent is perpendicular to the second thruster trace.

4. The mechanical joint of claim **1** wherein:

the second coupled member has a second pivot axis that is orthogonal to the first pivot axis; and

the first coupled member is configured to rotate around the second pivot axis through a plurality of second axis angular positions; and

the mechanical joint further comprises:

a second cam assembly operatively secured to the second coupled member and having a third lobe disposed on a first side of the second pivot axis and a fourth lobe disposed on a second side of the second pivot axis opposing the first side, the third lobe and the fourth lobe defining a second curved surface having a second depression;

a third actuator operatively secured to the first coupled member and disposed on the first side of second pivot axis and having a third extendible rod with a third tip that is engaged with the second curved surface of the third lobe in a series of third contact points on the second curved surface, each third contact point corresponding to one of the second axis angular positions and each having a third orthogonal distance from the second pivot axis; and

a fourth actuator operatively secured to the first coupled member and disposed on the second side of the second pivot axis and having a fourth extendible rod with a fourth tip that is engaged with the second curved surface of the fourth lobe in a series of fourth contact points on the second curved surface, each fourth contact point corresponding to one of the second axis angular positions and each having a fourth orthogonal distance from the second pivot axis; wherein

the third actuator and the fourth actuator are configured to cause rotation of the second coupled member with respect to the first coupled member through the plurality of second pivot axis angular positions.

5. The mechanical joint of claim **4** wherein the third orthogonal distance and the fourth orthogonal distance each are a value "r_2" and the second curved surface conforms at least in part to a loci of (x_j,y_j) points that vary through a varying rotational angle "θ_j" and are defined by: $x_j=r_2*(\cos(\theta_j)+\theta_j*\sin(\theta_j))$, $y_j=r_2*(\sin(\theta_j)-\theta_j*\cos(\theta_j))$.

6. The mechanical joint of claim **4** wherein:

the third actuator has a third thrusting mode and a third relaxing mode and a third thrusting trace;

the fourth actuator has a fourth thrusting mode and a fourth relaxing mode and a fourth thrusting trace; and

when the third actuator is in the third relaxing mode and the fourth actuator is in the fourth thrusting mode, the third tip translocates along the third thrusting trace and along the second curved surface of the third lobe away from the second depression and the fourth tip translocates along the fourth thrusting trace and along the second curved surface of the fourth lobe toward the second depression as the first coupled member rotates around the second pivot axis in a third rotational direction that is orthogonal to the first and second rotational directions; and

when the third actuator is in the third thrusting mode and the fourth actuator is in the fourth relaxing mode, the third tip translocates along the third thrusting trace and along the second curved surface of the third lobe toward the second depression and the fourth tip translocates along the fourth thrusting trace and along the second curved surface of the fourth lobe away from the second depression as the first coupled member rotates around the second pivot axis in a fourth rotational direction that is opposed to the first rotational direction and that is orthogonal to the first and second rotational directions; wherein

the second curved surface has a third tangent at each third contact point and has a fourth tangent at each fourth contact point and at each third contact point the third tangent is perpendicular to the third thruster trace and at each fourth contact point the fourth tangent is perpendicular to the fourth thruster trace.

7. The mechanical joint of claim **4** wherein the first cam assembly comprises a first dual arch-member having a first open direction and the second cam assembly comprises a second dual arch-shaped member having a second open direction and wherein the first dual arch-shaped member and the second dual arch-shaped member are joined orthogonally at their midpoints in a configuration wherein the first open direction is opposed to the second open direction.

8. A mechanical joint comprising:

a first coupled member having a first pivot axis;

a first cam assembly operatively secured to the first coupled member and having a first lobe disposed on a first side of the first pivot axis and a second lobe disposed on a second side of the first pivot axis opposing the first side, the first lobe and the second lobe defining a first curved surface having a first depression between the first lobe and the second lobe;

a second coupled member configured to rotate around the first pivot axis through a plurality of first axis angular positions;

a first actuator operatively secured to the second coupled member and disposed on the first side of the first pivot axis and having a first extendible rod with a first tip that is engaged with the first curved surface of the first lobe in a series of first contact points on the first curved surface, each first contact point corresponding to one of the first axis angular positions, and the first actuator having a first thrusting mode and a first relaxing mode and a first thruster trace;

a second actuator operatively secured to the second coupled member and disposed on the second side of the first pivot axis and having a second extendible rod with a second tip that is engaged with the first curved surface of the second lobe in a series of second contact points on the first curved surface, each second contact point corresponding to one of the first axis angular positions, and the second actuator having a second thrusting mode and a second relaxing mode and a second thruster trace; wherein

when the first actuator is in the first relaxing mode and the second actuator is in the second thrusting mode, the first tip translocates along the first thruster trace and along the first curved surface of the first lobe away from the first depression and the second tip translocates along the second thruster trace and along the first curved surface of the second lobe toward the first depression as the second coupled member rotates around the first pivot axis in a first rotational direction; and

when the first actuator is in the first thrusting mode and the second actuator is in the second relaxing mode, the first tip translocates along the first thruster trace and along the first curved surface of the first lobe toward the first depression and the second tip translocates along the second thruster trace and along the first curved surface of the second lobe away from the first depression as the second coupled member rotates around the first pivot axis in a second rotational direction that is opposed to the first rotational direction; and wherein

the first curved surface has a first tangent at each first contact point and has a second tangent at each second contact point and the first tangent at each first contact point is perpendicular to the first thruster trace and the second tangent at each second contact point is perpendicular to the second thruster trace.

9. The mechanical joint of claim **8** wherein each first contact point has first orthogonal distance from the first pivot axis and each second contact point has a second orthogonal distance from the first pivot axis and the first orthogonal distance and the second orthogonal distance each are a value "r_1" and the first curved surface conforms at least in part to a loci of (x_i,y_i) points that vary through a varying rotational angle "θ_i" and are defined by: $x_i=r_1*(\cos(\theta_i)+\theta_i*\sin(\theta_i))$, and $y_i=r_1*(\sin(\theta_i)-\theta_i*\cos(\theta_i))$.

10. The mechanical joint of claim **8** wherein the second coupled member has a second pivot axis that is orthogonal to the first pivot axis and the first coupled member is configured to rotate around the second pivot axis through a plurality of second axis angular positions, and the mechanical joint further comprises:

a second cam assembly operatively secured to the second coupled member and having a third lobe disposed on a first side of the second pivot axis and a fourth lobe disposed on a second side of the second pivot axis opposing the first side, the third lobe and the fourth lobe defining a second curved surface having a second depression;

a third actuator operatively secured to the first coupled member and disposed on the first side of second pivot axis and having a third extendible rod with a third tip that is engaged with the second curved surface of the third lobe in a series of third contact points on the second curved surface, each third contact point corresponding to one of the second axis angular positions, and the third actuator having a third thrusting mode and a third relaxing mode and a third thruster trace; and

a fourth actuator operatively secured to the first coupled member and disposed on the second side of the second pivot axis and having a fourth extendible rod with a fourth tip that is engaged with the second curved surface of the fourth lobe in a series of fourth contact points on the second curved surface, each fourth contact point corresponding to one of the second axis angular positions, and the fourth actuator having a fourth thrusting mode and a fourth relaxing mode and a fourth thruster trace; wherein

when the third actuator is in the third relaxing mode and the fourth actuator is in the fourth thrusting mode, the third tip translocates along the third thruster trace and along the second curved surface of the third lobe away from the second depression and the fourth tip translocates along the fourth thruster trace and along the second curved surface of the fourth lobe toward the second depression as the fourth coupled member rotates around the second pivot axis in a third rotational direction; and

when the third actuator is in the third thrusting mode and the fourth actuator is in the fourth relaxing mode, the third tip translocates along the third thruster trace and along the second curved surface of the third lobe toward the second depression and the fourth tip translocates along the fourth thruster trace and along the second curved surface of the fourth lobe away from the second depression as the fourth coupled member rotates around the second pivot axis in a fourth rotational direction that is opposed to the third rotational direction; and wherein

the second curved surface has a third tangent at each third contact point and has a fourth tangent at each fourth contact point and the third tangent at each third contact point is perpendicular to the third thruster trace and the fourth tangent at each fourth contact point is perpendicular to the fourth thruster trace.

11. The mechanical joint of claim **10** wherein each third contact point has third orthogonal distance from the second pivot axis and each fourth contact point has a fourth orthogonal distance from the second pivot axis and the third orthogonal distance and the fourth orthogonal distance are a value "r_2" and the first curved surface conforms at least in part to a loci of (x_j,y_j) points that vary through a varying rotational angle "θ_j" and are defined by: $x_j=r_2*(\cos(\theta_j)+\theta_j*\sin(\theta_j))$, $y_j=r_2*(\sin(\theta_j)-\theta_j*\cos(\theta_j))$.

12. A mechanical joint comprising:

a first coupled member having a first pivot axis;

a first cam assembly operatively secured to the first coupled member and having a first lobe disposed on a first side of the first pivot axis and a second lobe disposed on a second side of the first pivot axis opposing the first side, the first lobe and the second lobe defining a first curved surface having a first depression between the first lobe and the second lobe;

a second coupled member configured to rotate around the first pivot axis through a plurality of first axis angular positions;

a first actuator operatively secured to the second coupled member and disposed on the first side of first pivot axis and having a first extendible rod with a first tip that is engaged with the first curved surface of the first lobe in a series of first contact points on the first curved surface, each first contact point corresponding to one of the first axis angular positions, and the first actuator having a first thrusting mode and a first relaxing mode and a first thruster trace;

a second actuator operatively secured to the second coupled member and disposed on the second side of the first pivot axis and having a second extendible rod with a second tip that is engaged with the first curved surface of the second lobe in a series of second contact points on the first curved surface, each second contact point corresponding to one of the first axis angular positions, and the second actuator having a second thrusting mode and a second relaxing mode and a second thruster trace; wherein

when the first actuator is in the first relaxing mode and the second actuator is in the second thrusting mode, the first tip translocates through a first relaxing relocation distance along the first thruster trace and along the first curved surface of the first lobe away from the first depression and the second tip translocates through a second thrusting relocation distance along the second thruster trace and along the first curved surface of the second lobe toward the first depression as the second coupled member rotates around the first pivot axis in a first rotational direction; and

when the first actuator is in the first thrusting mode and the second actuator is in the second relaxing mode, the first tip translocates through a first thrusting relocation distance along the first thruster trace and along the first curved surface of the first lobe toward the first depression and the second tip translocates through a second relaxing relocation distance along the second thruster trace and along the first curved surface of the second lobe away from the first depression as the second coupled member rotates around the first pivot axis in a second rotational direction that is opposed to the first rotational direction; and wherein

the first relaxing relocation distance is substantially equal to the second thrusting relocation distance and the first thrusting relocation distance is substantially equal to the second relaxation relocation distance.

13. The mechanical joint of claim **12** wherein each first contact point has first orthogonal distance from the first pivot axis and each second contact point has a second orthogonal distance from the first pivot axis and the first orthogonal distance and the second orthogonal distance are a value "r_1" and the first curved surface conforms at least in part to a loci of (x_i,y_i) points that vary through a varying rotational angle "θ_i" and are defined by: $x_i=r_1*(\cos(\theta_i)+\theta_i*\sin(\theta_i))$, and $y_i=r_1*(\sin(\theta_i)-\theta_i*\cos(\theta_i))$.

14. The mechanical joint of claim **12** wherein the second coupled member has a second pivot axis that is orthogonal to the first pivot axis and the first coupled member is configured to rotate around the second pivot axis through a plurality of second axis angular positions, and

the mechanical joint further comprises:

a second cam assembly operatively secured to the second coupled member and having a third lobe disposed on a first side of the second pivot axis and a fourth lobe disposed on a second side of the second pivot axis opposing the first side, the third lobe and the fourth lobe defining a second curved surface having a second depression;

a third actuator operatively secured to the first coupled member and disposed on the first side of second pivot axis and having a third extendible rod with a third tip that is engaged with the second curved surface of the third lobe in a series of third contact points on the second curved surface, each third contact point corresponding to one of the second axis angular positions, and the third actuator having a third thrusting mode and a third relaxing mode and a third thruster trace; and

a fourth actuator operatively secured to the first coupled member and disposed on the second side of the second pivot axis and having a fourth extendible rod with a fourth tip that is engaged with the second curved surface of the fourth lobe in a series of fourth contact points on the second curved surface, each fourth contact point corresponding to one of the second axis angular positions, and the fourth actuator having a fourth thrusting mode and a fourth relaxing mode and a fourth thruster trace; wherein

when the third actuator is in the third relaxing mode and the fourth actuator is in the fourth thrusting mode, the third tip translocates through a third relaxing relocation distance along the third thruster trace and along the second curved surface of the third lobe away from the second depression and the fourth tip translocates through a fourth thrusting relocation distance along the fourth thruster trace and along the second curved surface of the fourth lobe toward the second depression as the fourth coupled member rotates around the second pivot axis in a third rotational direction; and

when the third actuator is in the third thrusting mode and the fourth actuator is in the fourth relaxing mode, the third tip translocates through a third thrusting relocation distance along the fourth thruster trace and along the second curved surface of the third lobe toward the second depression and the fourth tip translocates through a fourth relaxing relocation distance along the fourth thruster trace and along the second curved surface of the fourth lobe away from the second depression as the fourth coupled member rotates around the second pivot axis in a fourth rotational direction that is opposed to the third rotational direction; and wherein

the third relaxing relocation distance is substantially equal to the fourth thrusting relocation distance and the third thrusting relocation distance is substantially equal to the fourth relaxation relocation distance.

15. The mechanical joint of claim **14** wherein each third contact point has third orthogonal distance from the second pivot axis and each fourth contact point has a fourth orthogonal distance from the second pivot axis and the third orthogonal distance and the fourth orthogonal distance are a value "r_2" and the first curved surface conforms at least in part to a loci of (x_j,y_j) points that vary through a varying rotational angle "θ_j" and are defined by: $x_j=r_2*(\cos(\theta_j)+\theta_j*\sin(\theta_j))$, $y_j=r_2*(\sin(\theta_j)-\theta_j*\cos(\theta_j))$.

* * * * *