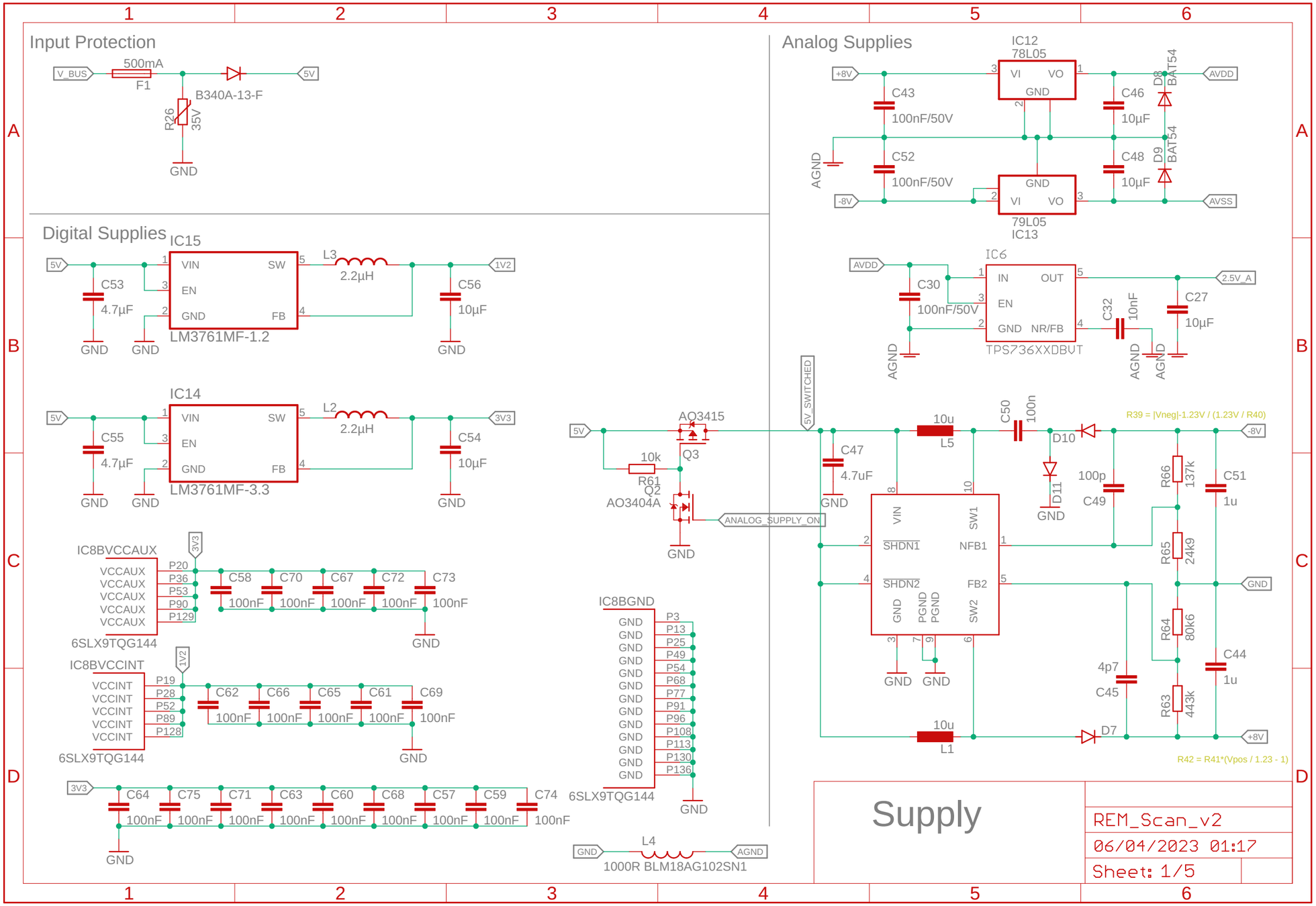

Supply

REM_Scan_v2

06/04/2023 01:17

Sheet: 1/5

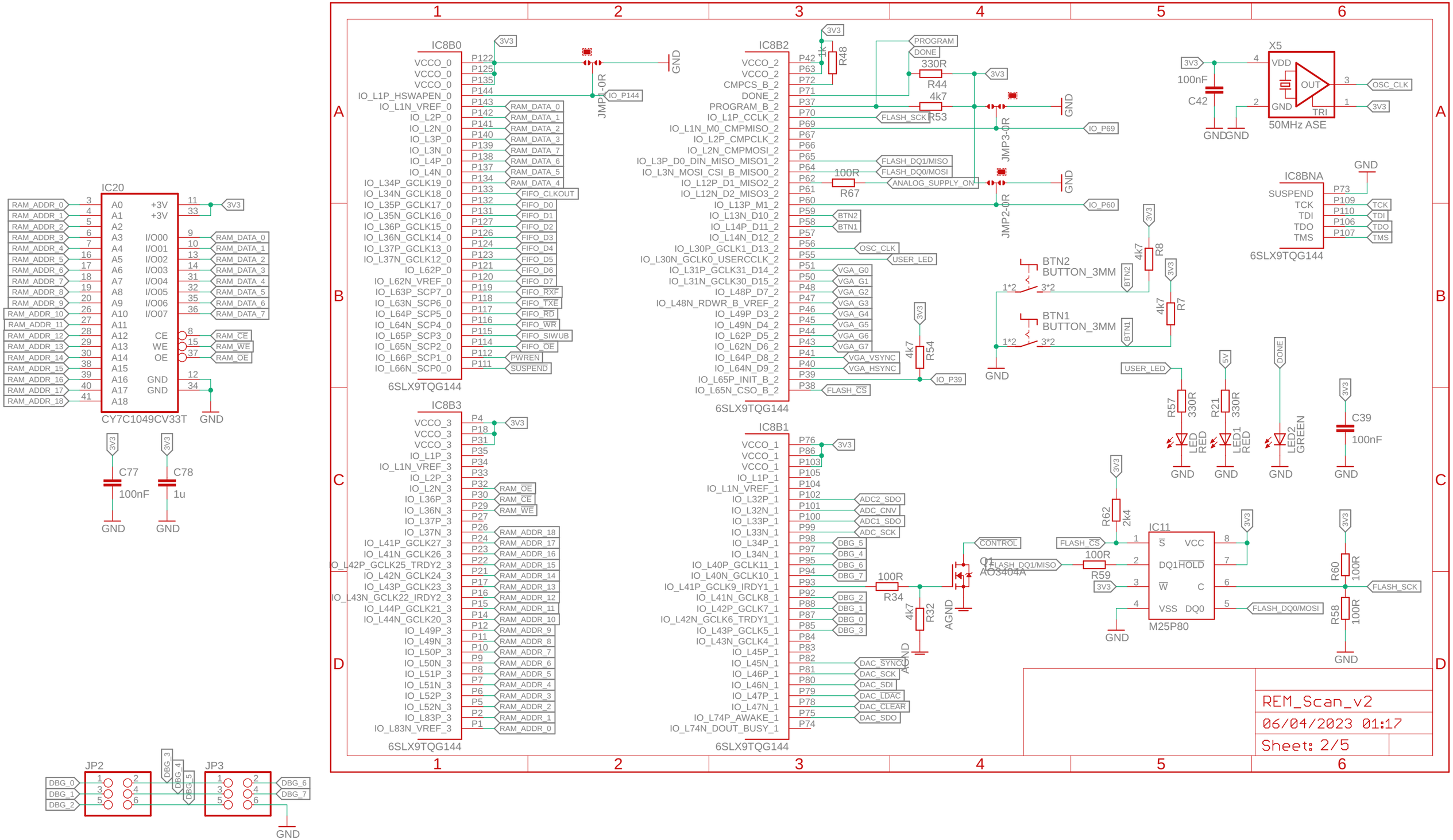
IC8B0
6SLX9TQG144
IC8B2
6SLX9TQG144
IC8B3
6SLX9TQG144
IC8B1
6SLX9TQG144
IC8BNA
6SLX9TQG144
IC20
CY7C1049CV33T
X5
50MHz ASE
IC11
M25P80
Q1
AO3404A
BTN2
BUTTON_3MM
BTN1
BUTTON_3MM
JP2
JP3
REM_Scan_v2
06/04/2023 01:17
Sheet: 2/5

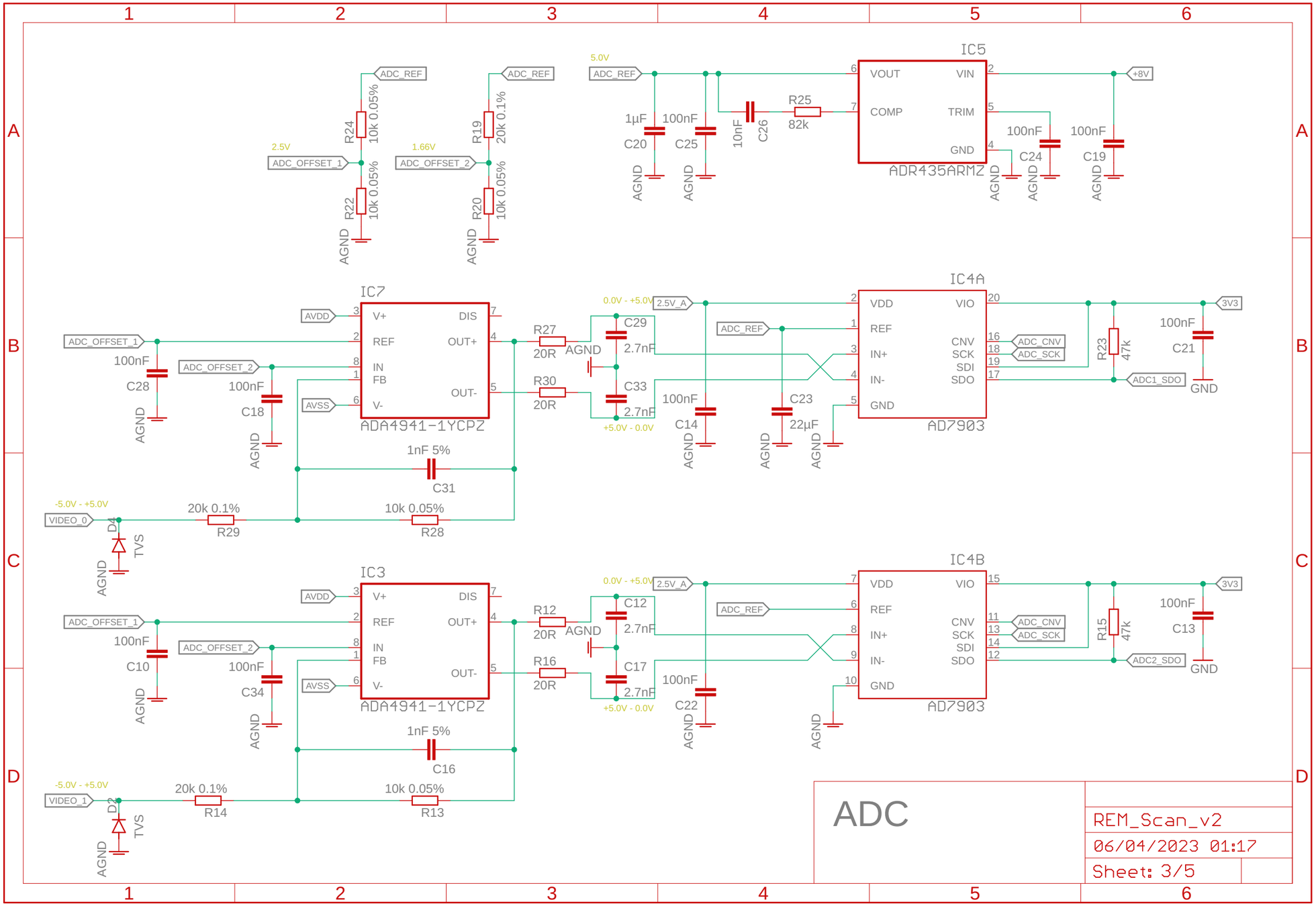
IC5
ADR435ARMZ
VOUT
VIN
COMP
TRIM
GND
5.0V
ADC_REF
+8V
R25
82k
C20
1µF
C25
100nF
C26
10nF
C24
100nF
C19
100nF
AGND
2.5V
ADC_OFFSET_1
1.66V
ADC_OFFSET_2
R24
10k 0.05%
R22
10k 0.05%
R19
20k 0.1%
R20
10k 0.05%
IC7
ADA4941-1YCPZ
V+
REF
IN
FB
V-
DIS
OUT+
OUT-
AVDD
AVSS
ADC_OFFSET_1
ADC_OFFSET_2
C28
100nF
C18
100nF
R27
20R
R30
20R
C29
2.7nF
C33
2.7nF
0.0V - +5.0V
+5.0V - 0.0V
2.5V_A
IC4A
AD7903
VDD
REF
IN+
IN-
GND
VIO
CNV
SCK
SDI
SDO
ADC_CNV
ADC_SCK
ADC1_SDO
3V3
R23
47k
C21
100nF
GND
C14
100nF
C23
22µF
1nF 5%
C31
-5.0V - +5.0V
VIDEO_0
D4
TVS
R29
20k 0.1%
R28
10k 0.05%
IC3
ADA4941-1YCPZ
C10
100nF
C34
100nF
R12
20R
R16
20R
C12
2.7nF
C17
2.7nF
IC4B
AD7903
ADC2_SDO
R15
47k
C13
100nF
C22
100nF
C16
1nF 5%
VIDEO_1
D2
R14
20k 0.1%
R13
10k 0.05%
ADC
REM_Scan_v2
06/04/2023 01:17
Sheet: 3/5

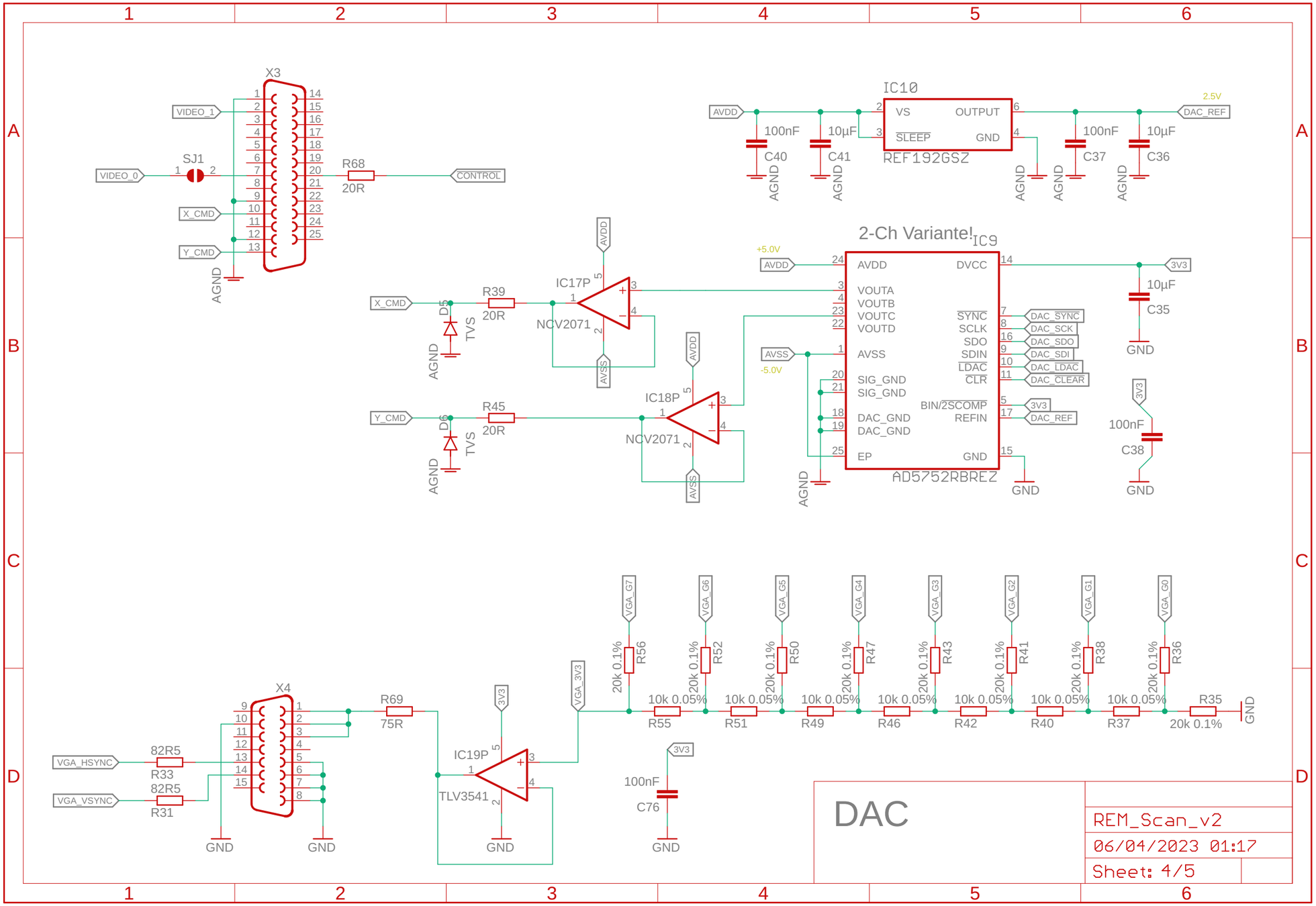

DAC

REM_Scan_v2

06/04/2023 01:17

Sheet: 4/5

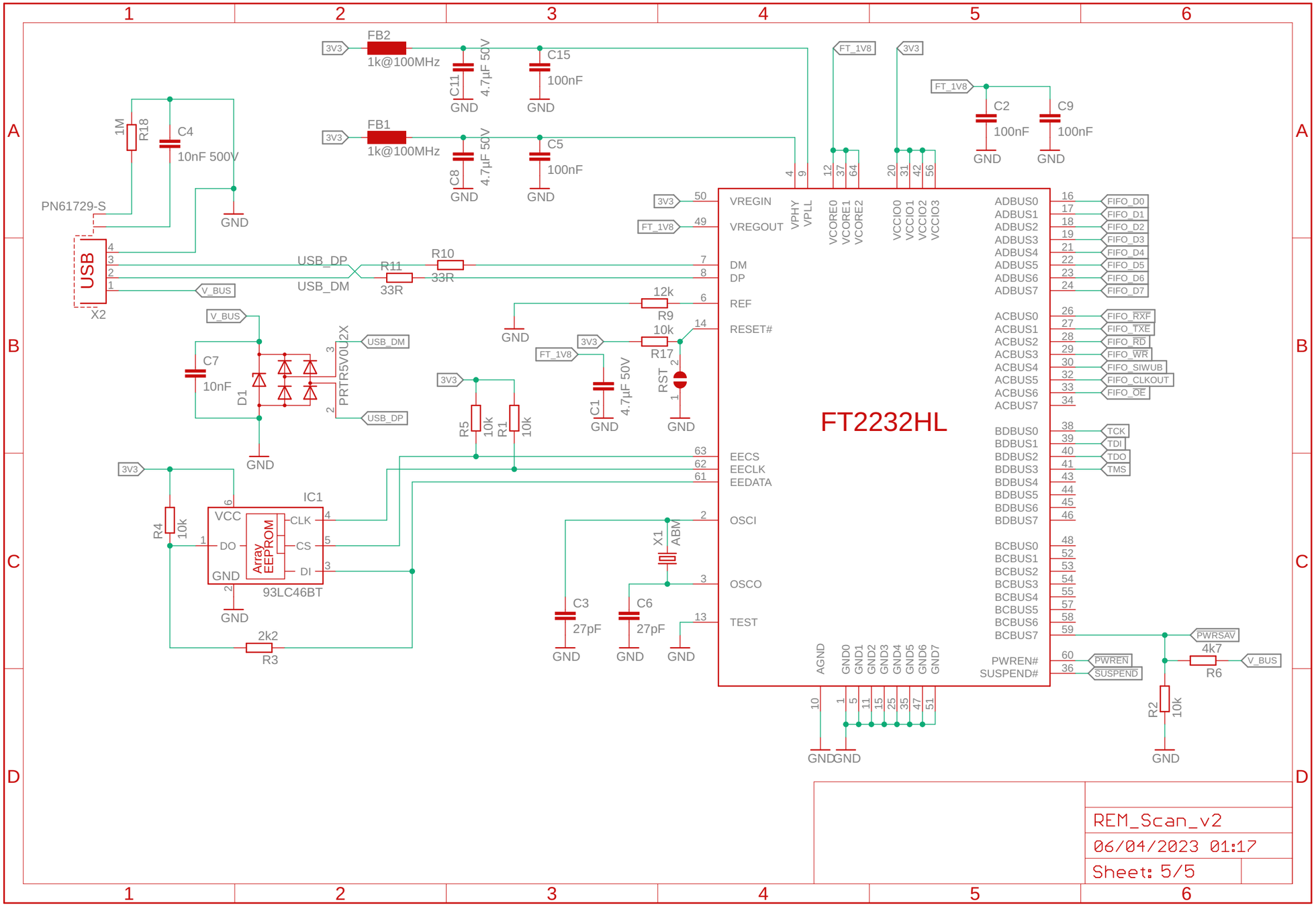

REM_Scan_v2

06/04/2023 01:17

Sheet: 5/5