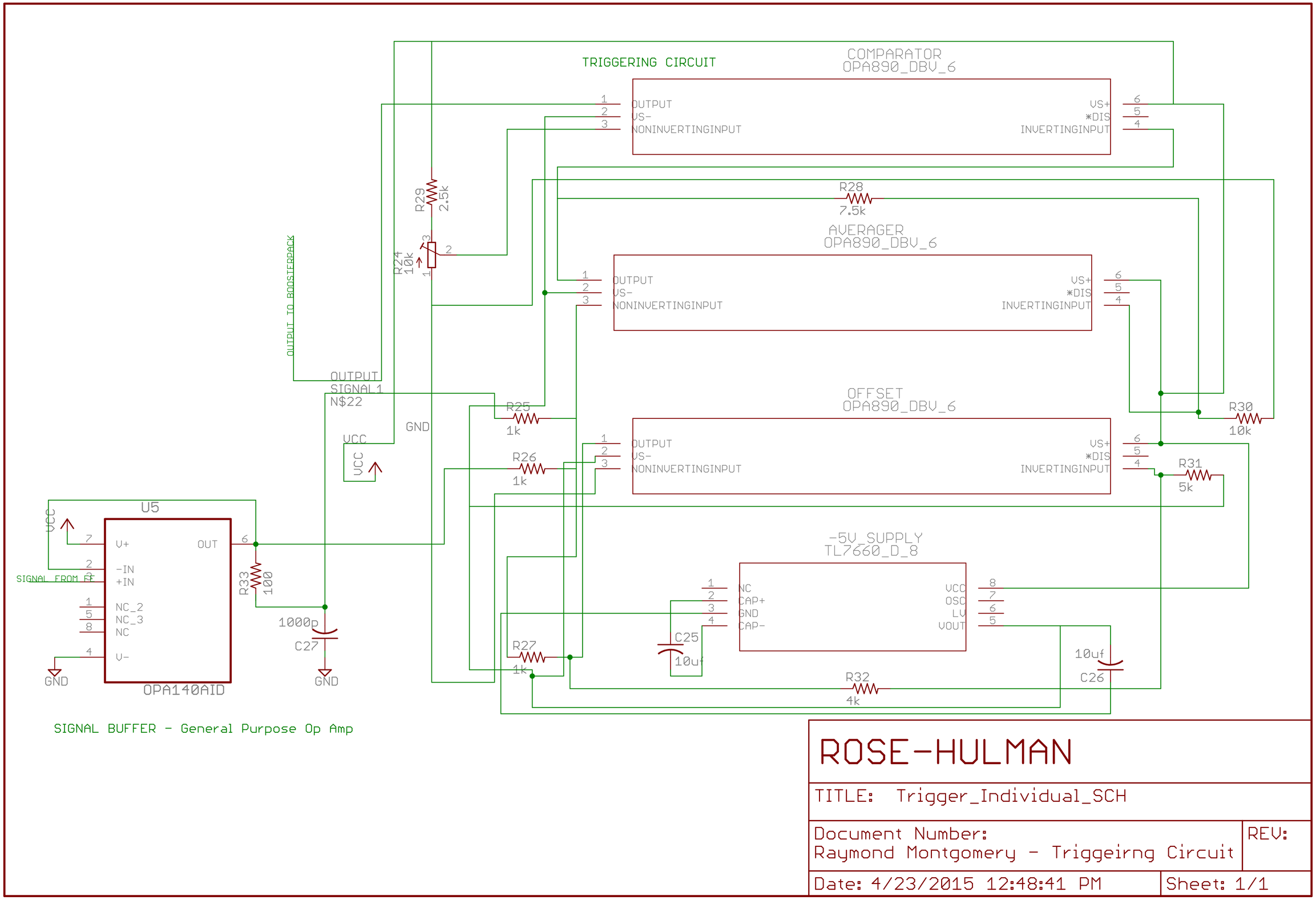
TRIGGERING CIRCUIT
COMPARATOR
OPA890_DBV_6
OUTPUT
VS-
NONINVERTINGINPUT
VS+
*DIS
INVERTINGINPUT
R29
2.5k
R24
10k
R28
7.5k
AVERAGER
OPA890_DBV_6
OUTPUT_TO_BOOSTERPACK
OUTPUT
SIGNAL_1
N$22
R25
1k
GND
VCC
OFFSET
OPA890_DBV_6
R30
10k
R26
1k
R31
5k
U5
V+
OUT
-IN
+IN
NC_2
NC_3
NC
V-
SIGNAL_FROM_F4
R33
100
1000p
C27
OPA140AID
-5V_SUPPLY
TL7660_D_8
NC
CAP+
GND
CAP-
VCC
OSC
LV
VOUT
C25
10uf
R27
1k
R32
4k
10uf
C26
SIGNAL BUFFER - General Purpose Op Amp
ROSE-HULMAN
TITLE: Trigger_Individual_SCH
Document Number:
Raymond Montgomery - Triggeirng Circuit
REV:
Date: 4/23/2015 12:48:41 PM
Sheet: 1/1