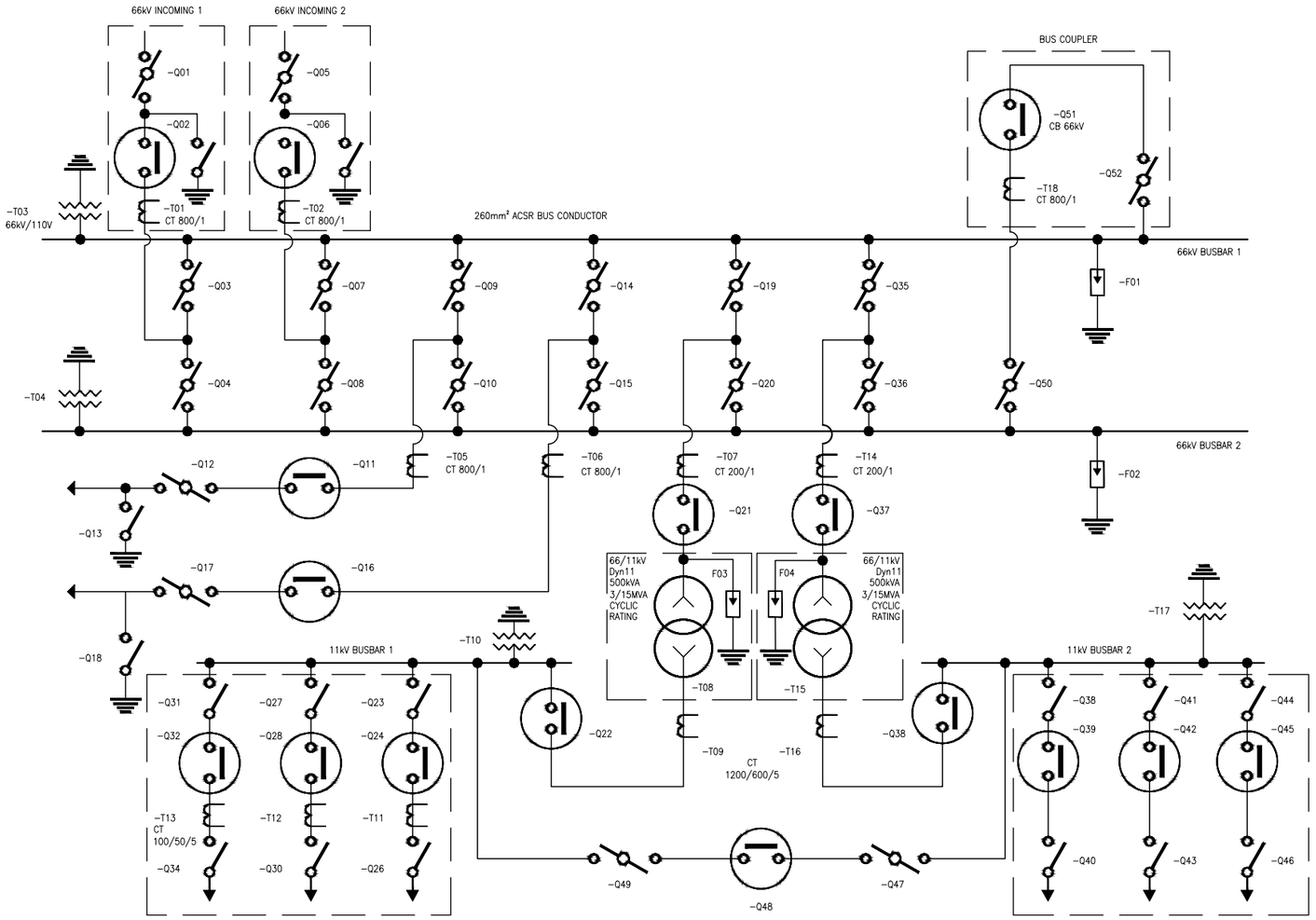

REVISION INFORMATION:						
REV	DESCRIPTION	DRN	DES	RVD	APP	DATE

DRAWN BY:

STEPHEN MARIA LAWRENCE U. ALEGROS

LAVENDERFIELD POWER NETWORK
66/11kV ZONE SUBSTATION
SINGLE LINE DIAGRAM – 66kV SWITCHYARD & 11kV DISTRIBUTION

DRAWING No. LVNDR–ALE–DRW–EL–00–0001

REV 0

A1

Monday, 23 March 2026 5:51:02 PM