SEATS: cube stool, all visible sides

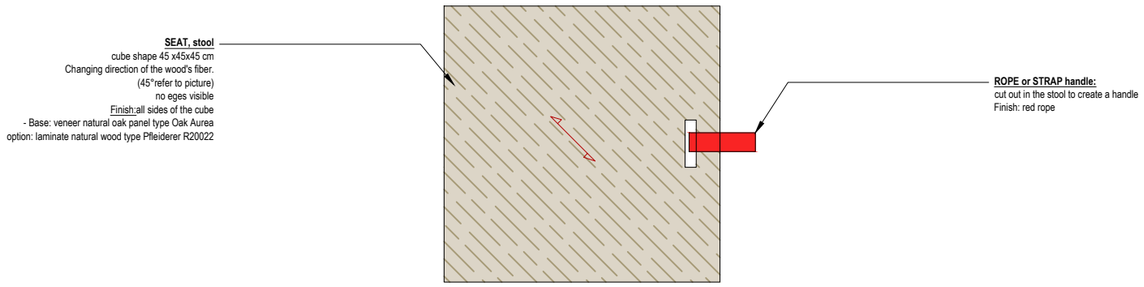

WOODEN SEAT/
UPPER VIEW - éch= 1/10

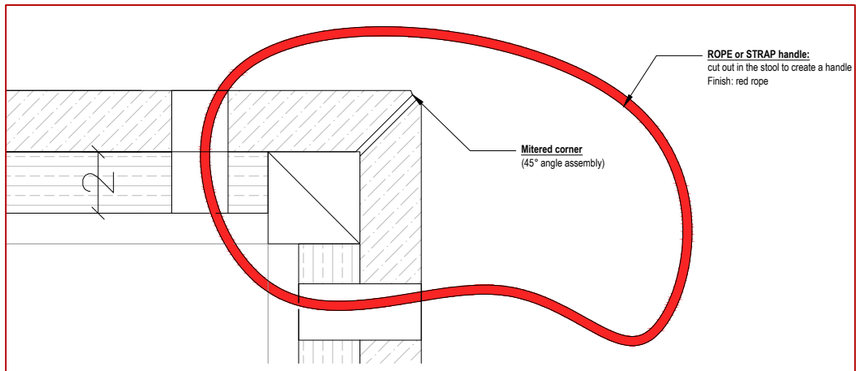

DETAIL 01: Strap Handle - éch= 1/2

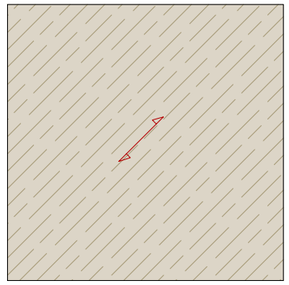

WOODEN SEAT/
SIDE VIEW - éch= 1/10

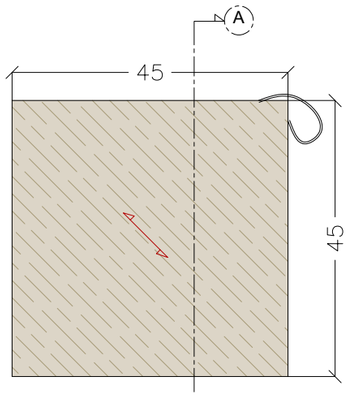

WOODEN SEAT/
FRONT VIEW - éch= 1/10

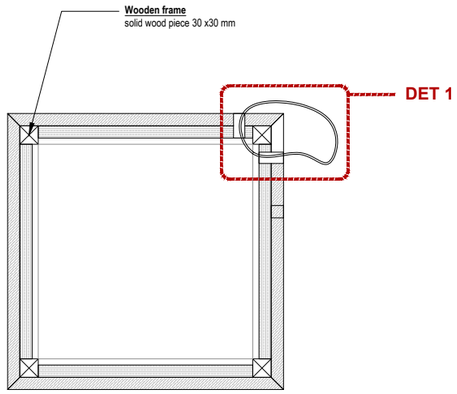

WOODEN SEAT/
SECTION AA - éch= 1/10

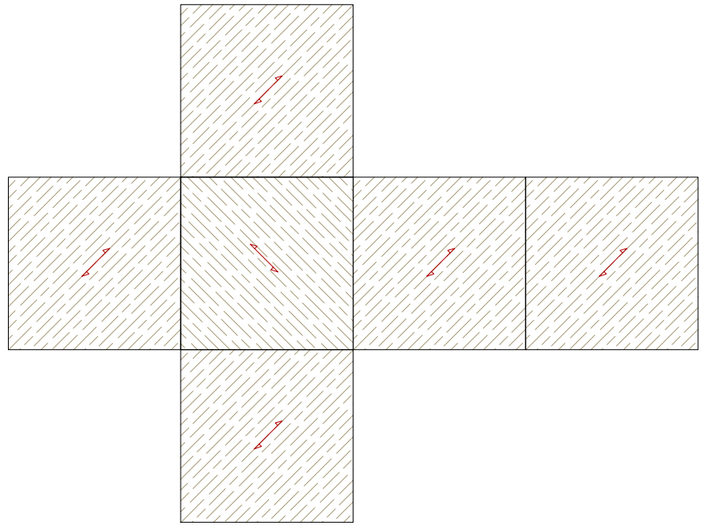

DETAIL 02: DIRECTION of the wood fiber - éch= 1/16

REFERENCES

Out of package
Loose furniture, kitchen equipment,
Vendor machin

UBISOFT							**BUCHAREST STUDIO**
EMETTEUR							OPERATION

RF_CIRC_Wooden seat	1/50
INTITULE DU DESSIN	ECHELLE

BUC	**UBI**	ESQ	PLAN	**-**	40.2	-	**28/04/2021**
PROJET	EMETTEUR	PHASE	TYPE	ZONE	ID	INDICE	DATE