Dashnyam-edab / **MelacsTop**

Type / to search

Code | Issues 34 | Pull requests | Actions | Projects 1 | Security | Insights

MelacsTop

Private

main | 1 branch | 0 tags | Go to file | Add file | Code

Dashnyam-edab Latest Hex files has be... b9060f2 2 weeks ago **80** commits

Application_OEM	MAJOR UPDATE FOR MELACS7	2 weeks ago
Documents	Major Update with working MODBUS secti...	4 months ago
Initial project	Create Application_OEM.zip	10 months ago
Inverter Mplab X etc	Inverter Compiler and IDE information	2 months ago
Latest Hex Files	Latest Hex files has been updated	2 weeks ago
Melacs Grid Inverter	Latest compiled hex for inverter	last month
Melacs7GUI	Sorted	9 months ago
MelacsDisplay+util...	UPDATE	5 months ago

About

No description, website, or topics provided.

Readme

Apache-2.0 license

Activity

0 stars

2 watching

0 forks

Releases

No releases published

Create a new release

extensionBoard485...	test	5 months ago
.gitignore	test	5 months ago
LICENSE	Initial commit	10 months ago
README - kopia.md	First draft of SPI	8 months ago
README.md	Update Readme	6 months ago

README.md

MelacsTop

Packages

No packages published
Publish your first package

Languages

- C 90.2%
- Makefile 4.4%
- C# 3.8%
- HTML 1.2%
- Assembly 0.4%
- Shell 0.0%

Suggested Workflows

Based on your tech stack

Actions Importer Set up

Automatically convert CI/CD files to YAML for GitHub Actions.

MSBuild based projects Configure

Build a MSBuild based project.

Maston Electronics and Control systems, the "ONE"

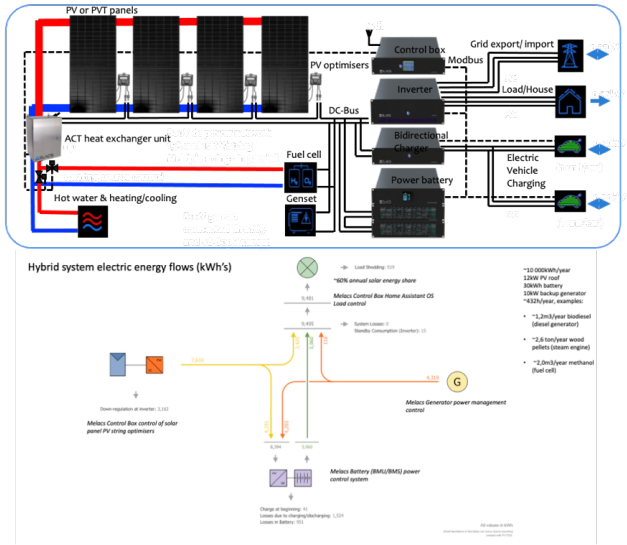

European Commission

HYSTORE

Project Overview Coming soon.....

CMake based projects

Configure

Build and test a CMake based project.

More workflows

Dismiss suggestions