POWERTIP TECH. CORP.

SPECIFICATIONS

CUSTOMER	:	CFR015
SAMPLE CODE	:	SH320240T-022-I-Q
MASS PRODUCTION CODE	:	PH320240T-022-I-Q
SAMPLE VERSION	:	01
SPECIFICATIONS EDITION	:	003
DRAWING NO. (Ver.)	:	LMD-PH320240T-022-I-Q (Ver.001)
PACKAGING NO. (Ver.)	:	PKG-PH320240T-022-I-Q (Ver.001)

Customer Approved

Date:

Approved	Checked	Designer
廖志豪 Rex Liao	廖志豪 Rex Liao	張慶源 Yuan Chang

POWERTIP
2012.07.30
TW RD APR

☐ Preliminary specification for design input

■ Specification for sample approval

POWERTIP TECH. CORP.

Headquarters:

No.8, 6th Road, Taichung Industrial Park,
Taichung, Taiwan
台中市 407 工業區六路 8 號

TEL: 886-4-2355-8168
FAX: 886-4-2355-8166

E-mail: sales@powertip.com.tw
Http://www.powertip.com.tw

History of Version

Date	Ver.	Edi.	Description	Page	Design by
07/01/2011	01	001	New Drawing.	-	Poly
09/29/2011	01	002	New Sample	-	Poly
07/27/2012	01	003	Second Sample Modify TFT LCD Modify Optical Characteristics	- - 7	Yuan

Total: 35 Page

Contents

1. SPECIFICATIONS
- 1.1 Features
- 1.2 Mechanical Specifications
- 1.3 Absolute Maximum Ratings
- 1.4 DC Electrical Characteristics
- 1.5 Optical Characteristics
- 1.6 Backlight Characteristics

2. MODULE STRUCTURE
- 2.1 Counter Drawing
- 2.2 Interface Pin Description
- 2.3 Timing Characteristics
- 2.4 Programming Init code

3. QUALITY ASSURANCE SYSTEM
- 3.1 Quality Assurance Flow Chart
- 3.2 Inspection Specification

4. RELIABILITY TEST
- 4.1 Reliability Test Condition

5. PRECAUTION RELATING PRODUCT HANDLING
- 5.1 Safety
- 5.2 Handling
- 5.3 Storage
- 5.4 Terms of Warranty

Appendix : 1. LCM Drawing
2. LCM Packaging Specifications

Note : For detailed information please refer to IC data sheet :
Primacy(TFT LCD): SSD2119

1. SPECIFICATIONS

1.1 Features

Main LCD Panel

Item	Standard Value
Display Type	320* (R、G、B) * 240 Dots
LCD Type	a-Si TFT , Normally White , TN mode , Transmissive type
Screen size (inch)	3.5 inch
Viewing Direction	6 O'clock
Color configuration	R.G.B. vertical stripe
Backlight	LED B/L
Driver IC	SSD2119 (262K Colors)
Interface	1. 8/ 9/ 16/ 18-bit 6800-series /8080-series Parallel Interface. 2. Serial Peripheral Interface (SPI). 3. 18-/6-bit RGB interface (DEN,DOTCLK, HSYNC, VSYNC, DB[17:0]). 4. VSYNC interface (system interface + VSYNC). 5. WSYNC interface (system interface + WSYNC).
ROHS	THIS PRODUCT CONFORMS THE ROHS OF PTC Detail information please refer web side： http://www.powertip.com.tw/news.php?area_id_view=1085560481/

1.2 Mechanical Specifications

Item	Standard Value	Unit
Outline Dimension	76.9 (W) * 63.9(L) * 3.5(H)(MAX)	mm

LCD Panel

Item	Standard Value	Unit
Active Area	70.08 (W) * 52.56 (L)	mm

Note：For detailed information please refer to LCM drawing.

1.3 Absolute Maximum Ratings

Module

Item	Symbol	Condition	Min.	Max.	Unit
System Power Supply Voltage	VDDIO	VSS	-0.3	+4.0	V
Input Voltage	VCI	-	-0.3	+5.0	V
Operating Temperature	T_{OP}	-	-20	+70	°C
Storage Temperature	T_{ST}	-	-30	+80	°C
Storage Humidity	H_D	Ta < 60 °C	20	90	%RH

1.4 DC Electrical Characteristics

Module VSS = 0V, Ta = 25°C

Item	Symbol	Condition	Min.	Typ.	Max.	Unit
Power Supply Voltage	VDDIO	-	3.0	3.3	3.6	V
Input High Voltage	V_{IH1}	-	0.8* VDDIO	-	VDDIO	V
Input Low Voltage	V_{IL1}	-	0	-	0.2* VDDIO	V
Output High Voltage	V_{OH1}	I_{OH}=-0.1mA	0.9 * VDDIO	-	VDDIO	V
Output Low Voltage	V_{OL1}	I_{OL}=0.1mA	0	-	0.1* VDDIO	V
Supply Current	IDDIO+ICI	VDDIO/VCI = 3.3 V Pattern= picture	-	7	-	mA
		VDDIO/VCI = 3.3 V Pattern= Black *1	-	9.5	14.3	mA

Note1：Maximum current display.

1.5 Optical Characteristics

TFT LCD Panel VDDIO =3.3V, Ta=25°C

Item		Symbol	Condition	Min.	Typ.	Max.	Unit	-
Response time		Tr + Tf	Ta = 25°C θX, θY = 0°	-	30	45	ms	Note2
Viewing angle	Top	θY+	CR ≥ 10	-	50	-	Deg.	Note4
	Bottom	θY-		-	50	-		
	Left	θX-		-	50	-		
	Right	θX+		-	50	-		
Contrast ratio		CR	Ta = 25°C θX , θY = 0°	200	250	-	-	Note3
Color of CIE Coordinate （With B/L）	White	X		0.26	0.31	0.36	-	Note1
		Y		0.29	0.34	0.39		
	Red	X		0.58	0.63	0.68		
		Y		0.29	0.34	0.39		
	Green	X		0.28	0.33	0.38		
		Y		0.55	0.60	0.65		
	Blue	X		0.10	0.15	0.20		
		Y		0.03	0.08	0.13		
Average Brightness Pattern=white display		IV	IF= 20 mA	220	250	-	cd/m^2	Note1
Uniformity		△B		70	-	-	%	Note1

Note1:
1：△B=B(min) / B(max) ×100%
2：Measurement Condition for Optical Characteristics:
a：Environment: 25℃±5℃ / 60±20%R.H，no wind，dark room below 10 Lux at typical lamp current and typical operating frequency.
b：Measurement Distance: 500 ± 50 ㎜ ，(θ= 0°)
c：Equipment: TOPCON BM-7 fast，(field 1°)，after 10 minutes operation.
d：The uncertainty of the C.I.E coordinate measurement ±0.01，Average Brightness ± 4%

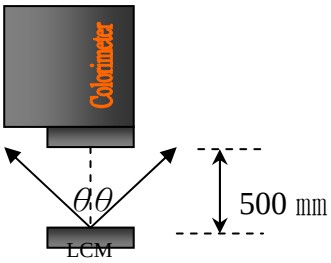

Colorimeter=BM-7 fast

Note2: Definition of response time:

The output signals of photo detector are measured when the input signals are changed from “black” to “white”(falling time) and from “white” to “black”(rising time), respectively. The response time is defined as the time interval between the 10% and 90% of Amplitudes.

Refer to figure as below:

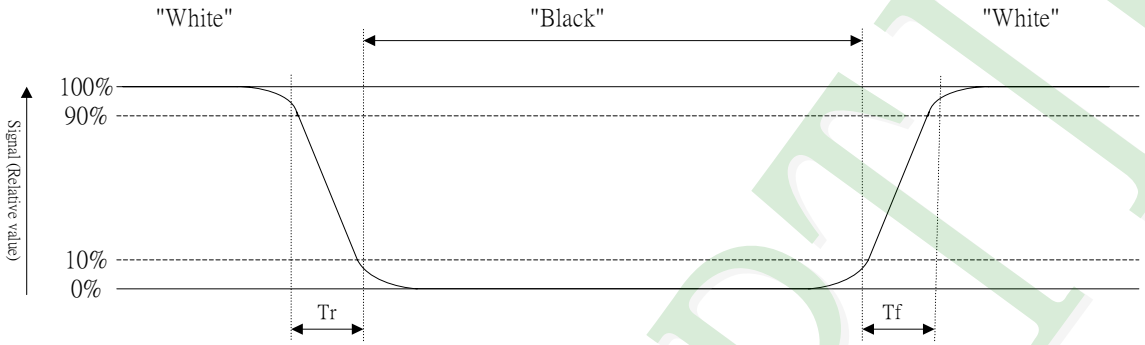

Note3: Definition of contrast ratio:

Contrast ratio is calculated with the following formula

$$\text{Contrast ratio (CR)} = \frac{\text{Photo detector output when LCD is at “White” state}}{\text{Photo detector output when LCD is at “Black” state}}$$

Note4: Definition of viewing angle:

Refer to figure as below:

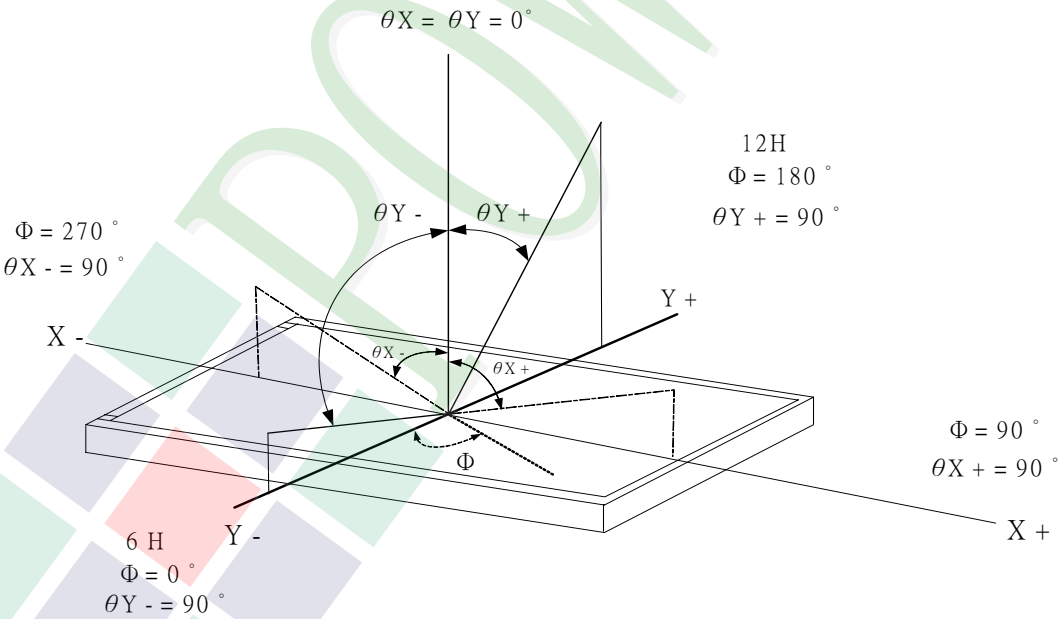

1.6 Backlight Characteristics

Maximum Ratings

Item	Symbol	Conditions	Min.	Max.	Unit
LED Forward Current	If	Ta =25℃	-	30	mA
LED Reverse Voltage	Vr		-	5	V
Power Dissipation	Pd			540	mW

Electrical / Optical Characteristics

Item	Symbol	Conditions	Min.	Typ.	Max.	Unit
Forward Voltage	VF	If=20mA	-	19.2	20.4	V
Average Brightness (Without LCD &T/P)	IV		4500	5200	-	cd/m^2
CIE Color Coordinate (Without LCD &T/P)	X		0.27	0.30	0.33	-
	Y		0.28	0.31	0.34	
Color	White					

Internal Circuit Diagram

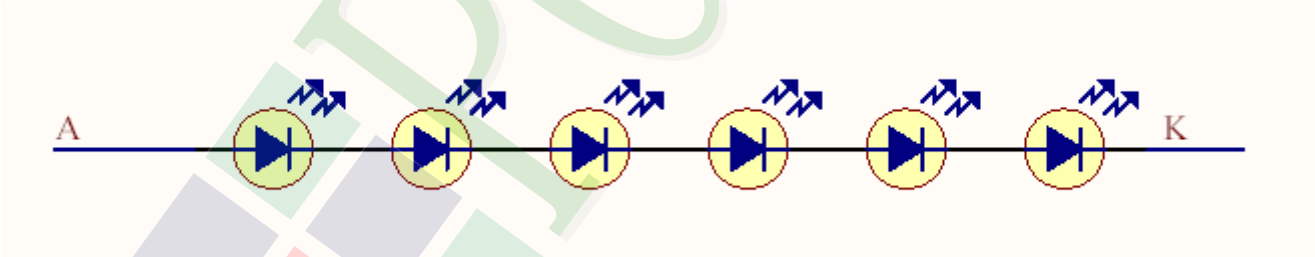

2. MODULE STRUCTURE

2.1 Counter Drawing

2.1.1 LCM Mechanical Diagram

* See Appendix

2.1.2 Block Diagram

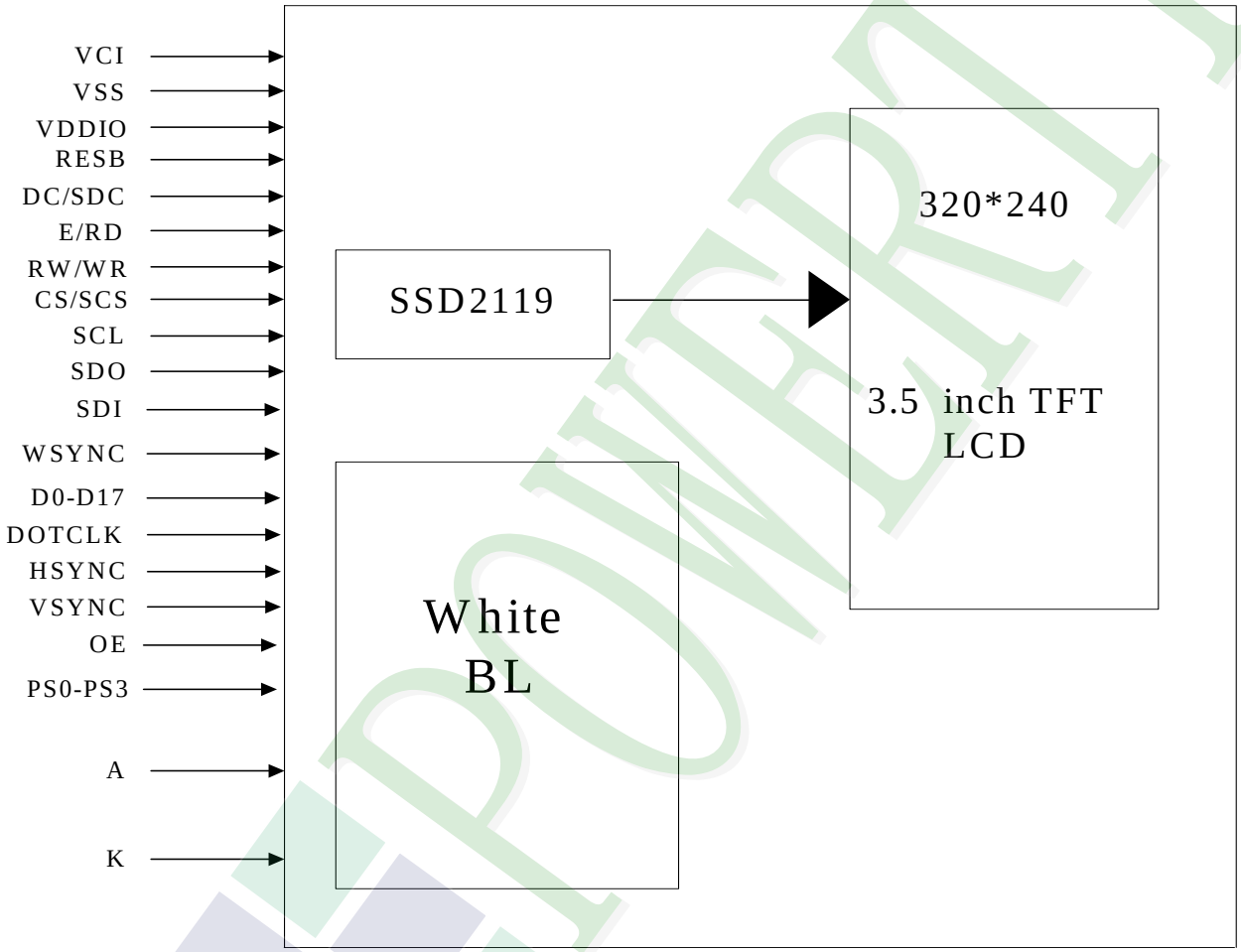

2.2 Interface Pin Description

Pin No	Symbol	Function
1	VCI	Booster input voltage pin.
2	VCI	Booster input voltage pin.
3	VSS	System ground pin of the IC.
4.	VDDIO	Voltage input pin for logic I/O.
5	VSS	System ground pin of the IC.
6	RESB	System reset pin. - An active low pulse at this pin will reset the IC, Connect to VDDIO in normal operation.
7	DC/SDC	Data or command. DC: Parallel Interface. SDC: Serial Interface.
8	E/RD	6800-system:E(enable signal). 8080-system:RD(read strobe signal). Serial mode: Not used and should be connected to VDDIO or VSS.
9	RW/WR	6800-system: RW(indicates read cycle when High, write cycle when Low). 8080-system: WR(write strobe signal).
10	CS/SCS	CS: Chip Select pin for 6800/8080 Parallel Interface. SCS: Chip select pin for Serial Mode Interface.
11	SCL	Serial clock input.
12	SDO	Data output pin in serial interface.
13	SDI	Data input pin in serial interface.
14	WSYNC	Ram Write Synchronization output. -Leave it OPEN when not used.
15	D17	For parallel mode,8/9/16/18 bit interface. Unused pins should connect to VSS.
16	D16	
17	D15	
18	D14	
19	D13	

Pin No	Symbol	Function
20	D12	For parallel mode,8/9/16/18 bit interface. Unused pins should connect to VSS. Please refer to Table 1.
21	D11	
22	D10	
23	D9	
24	D8	
25	D7	
26	D6	
27	D5	
28	D4	
29	D3	
30	D2	
31	D1	
32	D0	
33	VSS	System ground pin of the IC.
34	DOTCLK	Dot-clock signal and oscillator source.
35	HSYNC	Line Synchronization input.
36	VSYNC	Frame/Ram Write Synchronization input.
37	OE	Display enable pin from controller.
38	VSS	System ground pin of the IC.
39	PS0	Please refer to Table 1.
40	PS1	
41	PS2	
42	PS3	
43	VSS	System ground pin for the IC.
44	NC	No connection, Must be open.
45	NC	No connection, Must be open.

Pin No	Symbol	Function
46	NC	No connection, Must be open.
47	NC	No connection, Must be open.
48	VSS	System ground pin for the IC.
49	K	Backlight LED's cathode.
50	A	Backlight LED's anode.

Table 1

PS3	PS2	PS1	PS0	Interface Mode	Data bus input
0	0	0	0	16-bit 6800 parallel interface.	D[17:10],D[8:1]
0	0	0	1	8-bit 6800 parallel interface.	D[17:10]
0	0	1	0	16-bit 8080 parallel interface.	D[17:10],D[8:1]
0	0	1	1	8-bit 8080 parallel interface.	D[17:10]
0	1	0	0	9-bit generic D[17:9] (262k color) + 3-wire SPI If 65K color, D12 shorts to D17 internally.	-
0	1	0	1	16-bit generic (262k color)+ 3-wire SPI.	-
0	1	1	0	18-bit generic (262k color)+ 3-wire SPI.	-
0	1	1	1	6-bit generic D[17:12] (262k color) + 3-wire SPI.	-
1	0	0	0	18-bits 6800 parallel interface.	D[17:0]
1	0	0	1	9-bits 6800 parallel interface.	D[17:9]
1	0	1	0	18-bit 8080 parallel interface.	D[17:0]
1	0	1	1	9-bit 8080 parallel interface.	D[17:9]
1	1	1	0	3-wire SPI.	-
1	1	1	1	4-wire SPI.	-

2.3 Timing Characteristics

2.3.1 8080 Interface Timing

Write Cycle

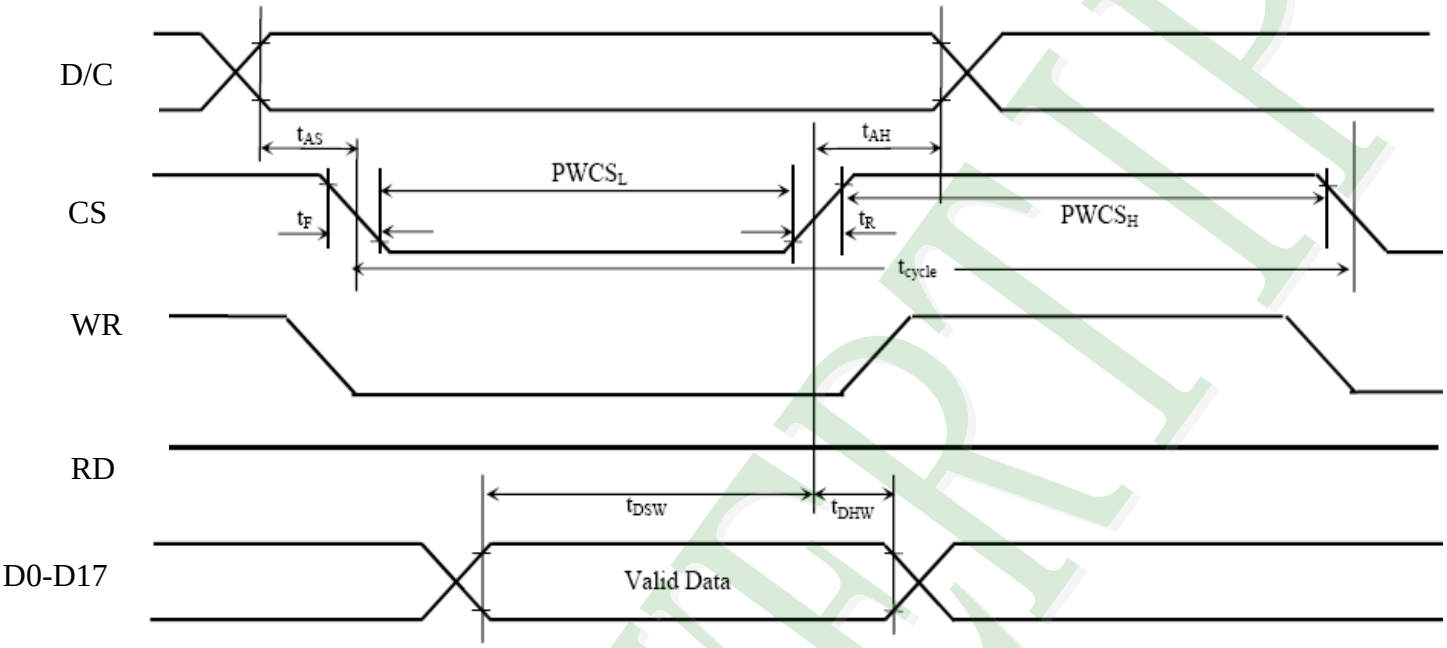

Read Cycle

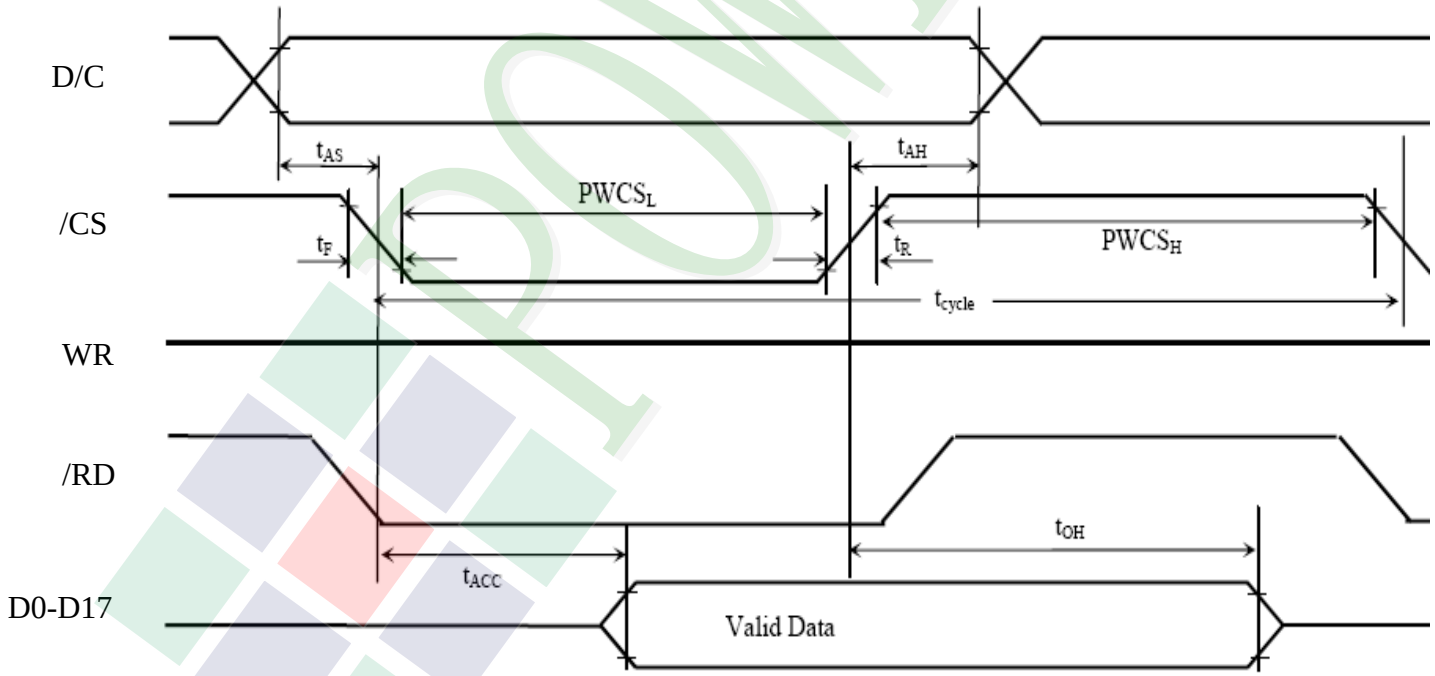

(VDDIO = 3.3V±.0.3V, T_A=-40~85ºC)

Item	Symbol	Condition	Rating		Units
			Min.	Max.	
Clock Cycle Time	tcycle	-	77	-	ns
Serial Clock Cycle Time SPI Clock tolerance = +/- 2 ppm	fCLK		-	15	MHz
Register select Setup Time	tAS		4	-	ns
Register select Hold Time	tAH	-	5	-	
Chip Select Setup Time	tCSS	-	2	-	
Chip Select Hold Time	tCSH	-	10	-	
Write Data Setup Time	tDSW	-	5	-	
Write Data Hold Time	tOHW	-	10	-	
Clock Low Time	tCLKL	-	38	-	
Clock High Time	tCLKH	-	38	-	
Rise time	tR	-	-	4	
Fall time	tF	-	-	4	

2.3.2 6800 Interface Timing

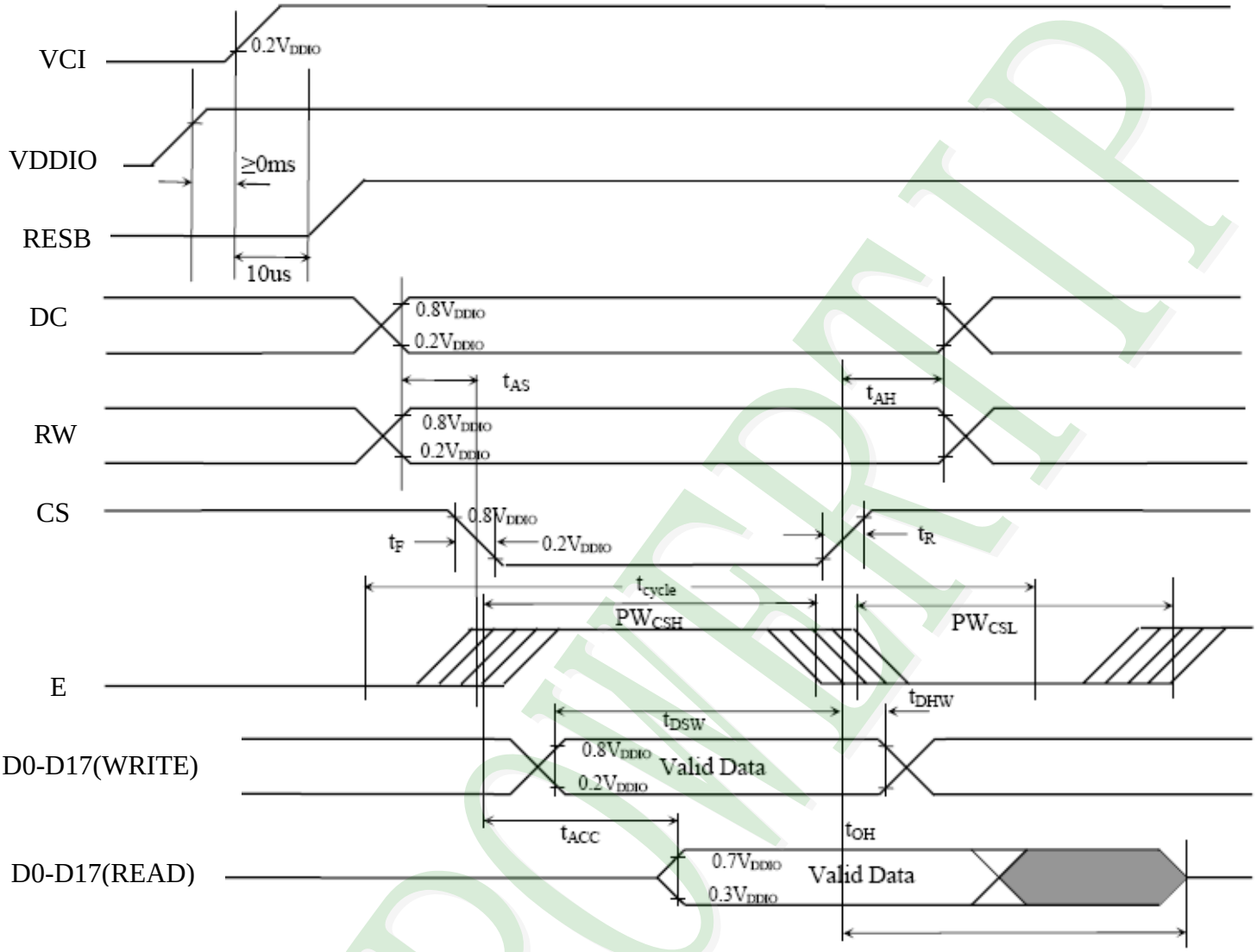

(VDDIO = 3.3V±.0.3V, T_A=-40~85ºC)

Item	Symbol	Condition	Rating		Units
			Min.	Max.	
Clock Cycle Time(write cycle)	tcycle	-	77	-	ns
Clock Cycle Time(read cycle)	tcycle		450	-	MHz
Address Setup Time(RW)	tAS		0	-	ns
Address Hold Time(RW)	tAH	-	0	-	
Data Setup Time(D0-D17,WRITE)	tDSW	-	5	-	
Data Hold Time(D0-D17,WRITE)	tDHW	-	5	-	
Data Access Time(D0-D17,READ)	tACC	-	250	-	
Output Hold time(D0-D17,READ)	tOH	-	100	-	
Pulse width CS low(write cycle)	PW_{scL}	-	40	-	
Pulse width CS high(write cycle)	PW_{scH}	-	25	-	
Pulse width CS low(read cycle)	PW_{scL}	-	500	-	
Pulse width CS high(read cycle)	PW_{scH}	-	500	-	
Rise time	tR	-	-	4	
Fall time	tF	-	-	4	

2.3.3 RGB Interface Timing

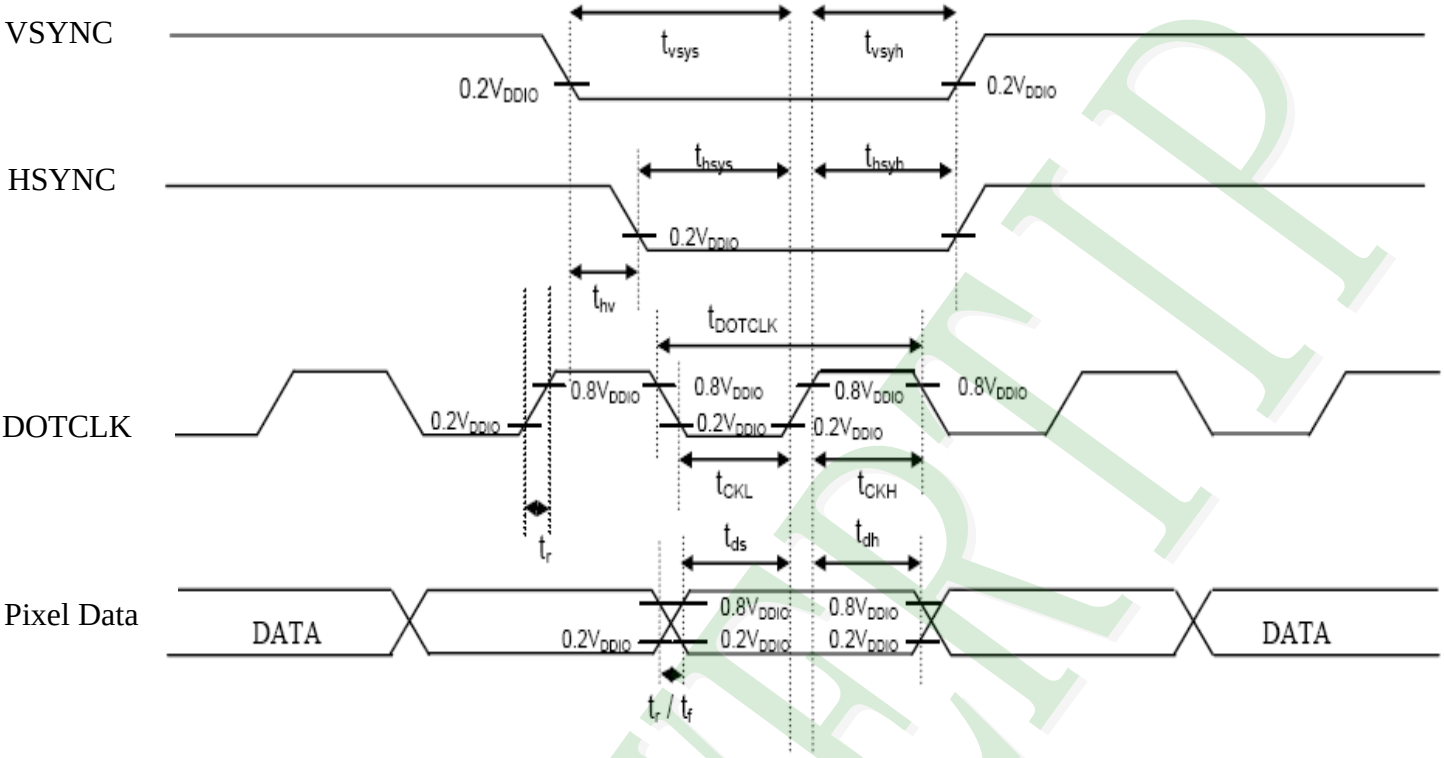

(VDDIO = 3.3V±.0.3V, T_A=-40~85ºC)

Item	Symbol	Condition	Rating			Units
			Min.	Typ.	Max.	
DOTCLK Frequency (70Hz frame rate)	f_{DOTCLK}	-	1	5.5	8.2	MHz
DOTCLK Period	f_{DOTCLK}		122	182	1000	ns
Vertical Sync Setup Time	t_{vsys}		20	-	-	ns
Vertical Sync Hold Time	t_{vsyH}	-	20	-	-	
Horizontal Sync Setup Time	t_{HSYS}	-	20	-	-	
Horizontal Sync Hold Time	t_{HSYH}	-	20	-	-	
Phase difference of Sync Signal Falling Edge	t_{HV}	-	0	-	320	t_{DOTCLK}
DOTCLK Low Period	t_{CLK}	-	61	-	-	ns
DOTCLK High Period	t_{CKH}	-	61	-	-	
Data Setup Time	t_{DS}	-	25	-	-	
Data hold Time	t_{DH}	-	25	-	-	

2.3.4 Serial Interface Timing

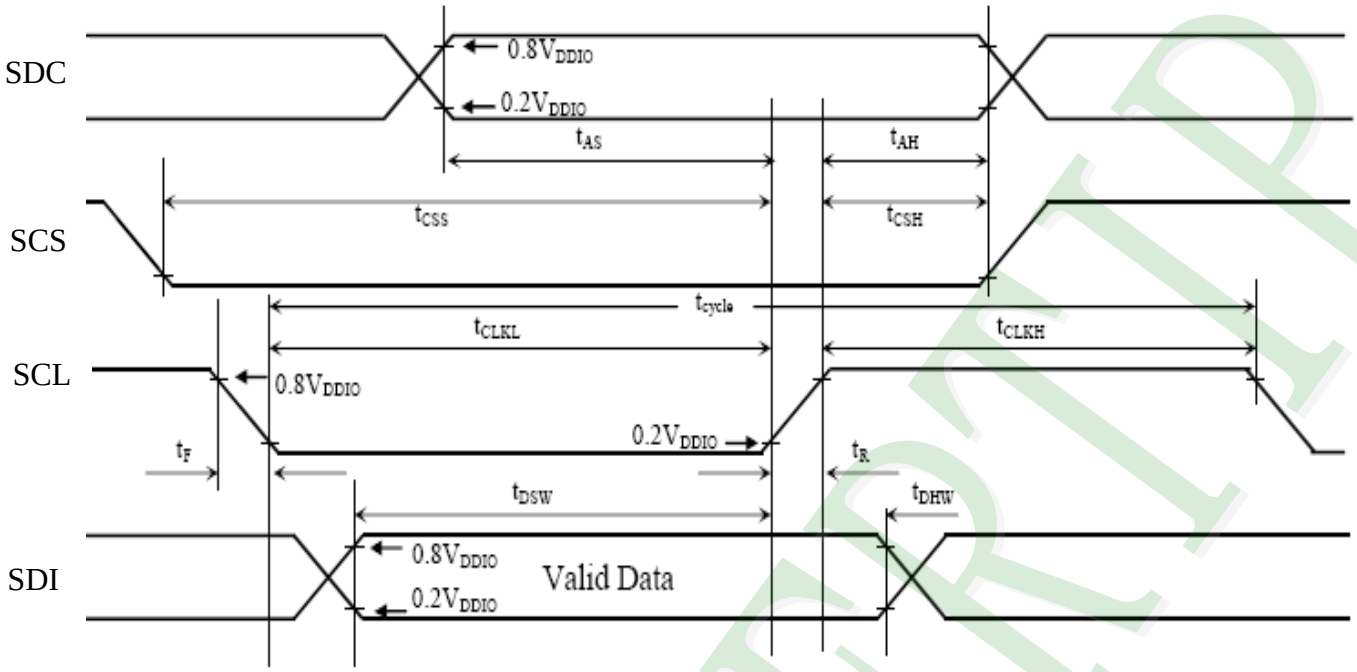

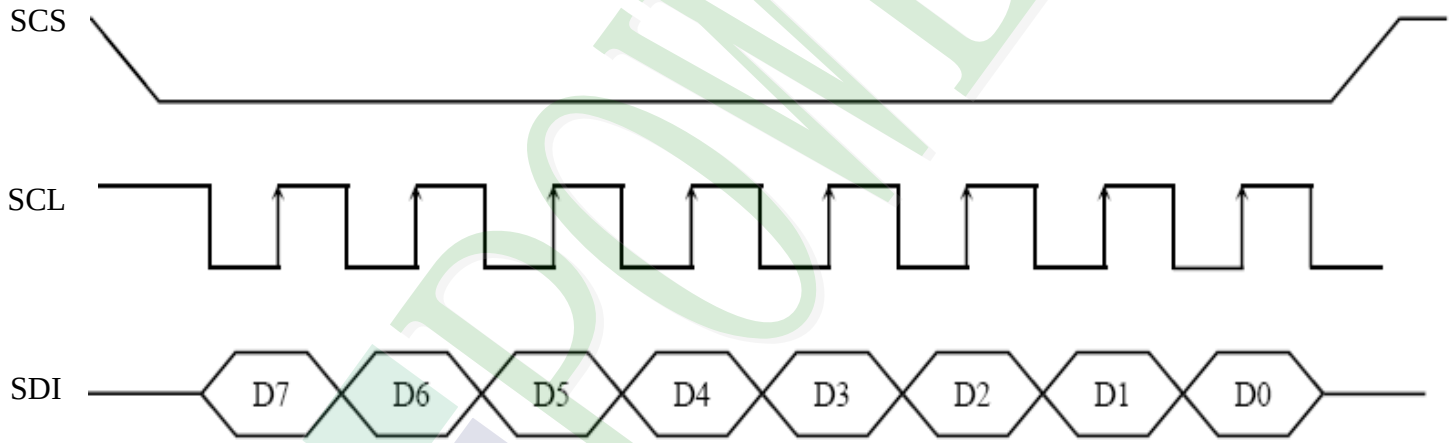

(VDDIO = 3.3V±.0.3V, T_A=-40~85ºC)

Item	Symbol	Condition	Rating			Units
			Min.	Typ.	Max.	
Clock Cycle Time	t_{cycle}		77	-	-	ns
Serial Clock Cycle Time SPI Clock tolerance=+/-2 ppm	f_{CLK}	-	-	-	15	MHz
Register select Setup Time	t_{AS}		4	-	-	ns
Register select Hold Time	t_{AH}		5	-	-	
Chip Select Setup Time	t_{CSS}	-	2	-	-	
Chip Select Hold Time	t_{CSH}	-	10	-	-	
Write Data Setup Time	t_{OSW}	-	5	-	-	
Write Data Hold Time	t_{OHW}	-	10	-	-	
Clock Low Time	t_{CLKL}	-	38	-	-	
Clock High Time	T_{CLKH}	-	38	-	-	
Rise time	t_R	-	-	-	4	
Fall time	t_F		-	-	4	

RESB

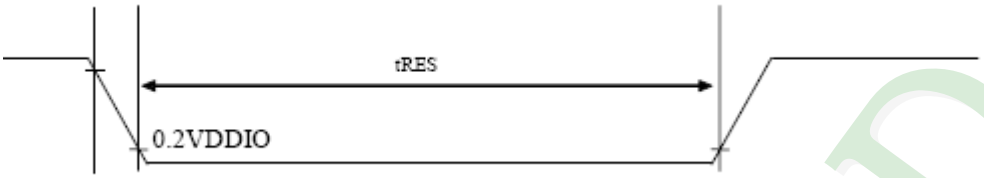

(VDDIO = 3.3V±.0.3V, T_A=-40~85ºC)

Item	Symbol	Condition	Rating		Units
			Min.	Max.	
Reset pulse duration	tRES	-	15	-	us

2.4 Programming Init code

;For SSD2119---16-bit 8080-series Parallel Interface.

```
INIT_MAIN
        MOV     ADDRH,#00H
        MOV     ADDRL,#28H
        CALL    WRITE_COMMAND
        MOV     ADDRH,#00H
        MOV     ADDRL,#06H
        CALL    WRITE_DATA

        MOV     ADDRH,#00H
        MOV     ADDRL,#00H
        CALL    WRITE_COMMAND
        MOV     ADDRH,#00H
        MOV     ADDRL,#01H
        CALL    WRITE_DATA

        MOV     ADDRH,#00H
        MOV     ADDRL,#01H
        CALL    WRITE_COMMAND
        MOV     ADDRH,#00111010b
        MOV     ADDRL,#efH;EFH
        CALL    WRITE_DATA

        MOV     ADDRH,#00H
        MOV     ADDRL,#02H
        CALL    WRITE_COMMAND
        MOV     ADDRH,#06H
        MOV     ADDRL,#00H
        CALL    WRITE_DATA

        MOV     ADDRH,#00H
        MOV     ADDRL,#03H          ;VGH/VGL Voltage Setting
        CALL    WRITE_COMMAND
        MOV     ADDRH,#64H
        MOV     ADDRL,#64H
        CALL    WRITE_DATA

        MOV     ADDRH,#00H
        MOV     ADDRL,#10H
        CALL    WRITE_COMMAND
        MOV     ADDRH,#00H
        MOV     ADDRL,#00H
        CALL    WRITE_DATA

        MOV     ADDRH,#00H
        MOV     ADDRL,#11H
        CALL    WRITE_COMMAND
        MOV     ADDRH,#64H
        MOV     ADDRL,#30H
```

```
        CALL    WRITE_DATA
        CALL    DELAY
        CALL    DELAY

        MOV     ADDRH,#00H
        MOV     ADDRL,#07H
        CALL    WRITE_COMMAND
        MOV     ADDRH,#00H
        MOV     ADDRL,#33H
        CALL    WRITE_DATA
        CALL    DELAY

        MOV     ADDRH,#00H
        MOV     ADDRL,#25H
        CALL    WRITE_COMMAND
        MOV     ADDRH,#e0H
        MOV     ADDRL,#00H
        CALL    WRITE_DATA

        MOV     ADDRH,#00H
        MOV     ADDRL,#0bH
        CALL    WRITE_COMMAND
        MOV     ADDRH,#53H
        MOV     ADDRL,#08H
        CALL    WRITE_DATA

;------------- Adjust the Gamma Curve -------------------

        MOV     ADDRH,#00H
        MOV     ADDRL,#30H
        CALL    WRITE_COMMAND
        MOV     ADDRH,#BFH
        MOV     ADDRL,#BDH
        CALL    WRITE_DATA

        MOV     ADDRH,#00H
        MOV     ADDRL,#31H
        CALL    WRITE_COMMAND
        MOV     ADDRH,#52H
        MOV     ADDRL,#47H
        CALL    WRITE_DATA

        MOV     ADDRH,#00H
        MOV     ADDRL,#32H
        CALL    WRITE_COMMAND
        MOV     ADDRH,#DDH
        MOV     ADDRL,#BAH
        CALL    WRITE_DATA

        MOV     ADDRH,#00H
        MOV     ADDRL,#33H
        CALL    WRITE_COMMAND
```

```
MOV     ADDRH,#35H
MOV     ADDRL,#0EH
CALL    WRITE_DATA

MOV     ADDRH,#00H
MOV     ADDRL,#34H
CALL    WRITE_COMMAND
MOV     ADDRH,#A6H
MOV     ADDRL,#BFH
CALL    WRITE_DATA

MOV     ADDRH,#00H
MOV     ADDRL,#35H
CALL    WRITE_COMMAND
MOV     ADDRH,#39H
MOV     ADDRL,#BCH
CALL    WRITE_DATA


MOV     ADDRH,#00H
MOV     ADDRL,#36H
CALL    WRITE_COMMAND
MOV     ADDRH,#C5H
MOV     ADDRL,#20H
CALL    WRITE_DATA

MOV     ADDRH,#00H
MOV     ADDRL,#37H
CALL    WRITE_COMMAND
MOV     ADDRH,#34H
MOV     ADDRL,#1EH
CALL    WRITE_DATA

;-------------------------power on sequence----------------------------

MOV     ADDRH,#00H
MOV     ADDRL,#0CH
CALL    WRITE_COMMAND
MOV     ADDRH,#00H
MOV     ADDRL,#05H
CALL    WRITE_DATA
CALL    DELAY
CALL    DELAY
CALL    DELAY

MOV     ADDRH,#00H
MOV     ADDRL,#0dH
CALL    WRITE_COMMAND
MOV     ADDRH,#00H
MOV     ADDRL,#12H
CALL    WRITE_DATA
CALL    DELAY
```

```
CALL    DELAY
CALL    DELAY

MOV     ADDRH,#00H
MOV     ADDRL,#1eH          ;VCOMH setup
CALL    WRITE_COMMAND
MOV     ADDRH,#00H
MOV     ADDRL,#E6H
CALL    WRITE_DATA
CALL    DELAY

MOV     ADDRH,#00H
MOV     ADDRL,#0eH          ;VCOML setup
CALL    WRITE_COMMAND
MOV     ADDRH,#29H
MOV     ADDRL,#00H
CALL    WRITE_DATA
CALL    DELAY

MOV     ADDRH,#00H
MOV     ADDRL,#26H
CALL    WRITE_COMMAND
MOV     ADDRH,#7cH
MOV     ADDRL,#00H
CALL    WRITE_DATA

MOV     ADDRH,#00H
MOV     ADDRL,#27H
CALL    WRITE_COMMAND
MOV     ADDRH,#00H
MOV     ADDRL,#6dH
CALL    WRITE_DATA
```

3. QUALITY ASSURANCE SYSTEM

3.1 Quality Assurance Flow Chart

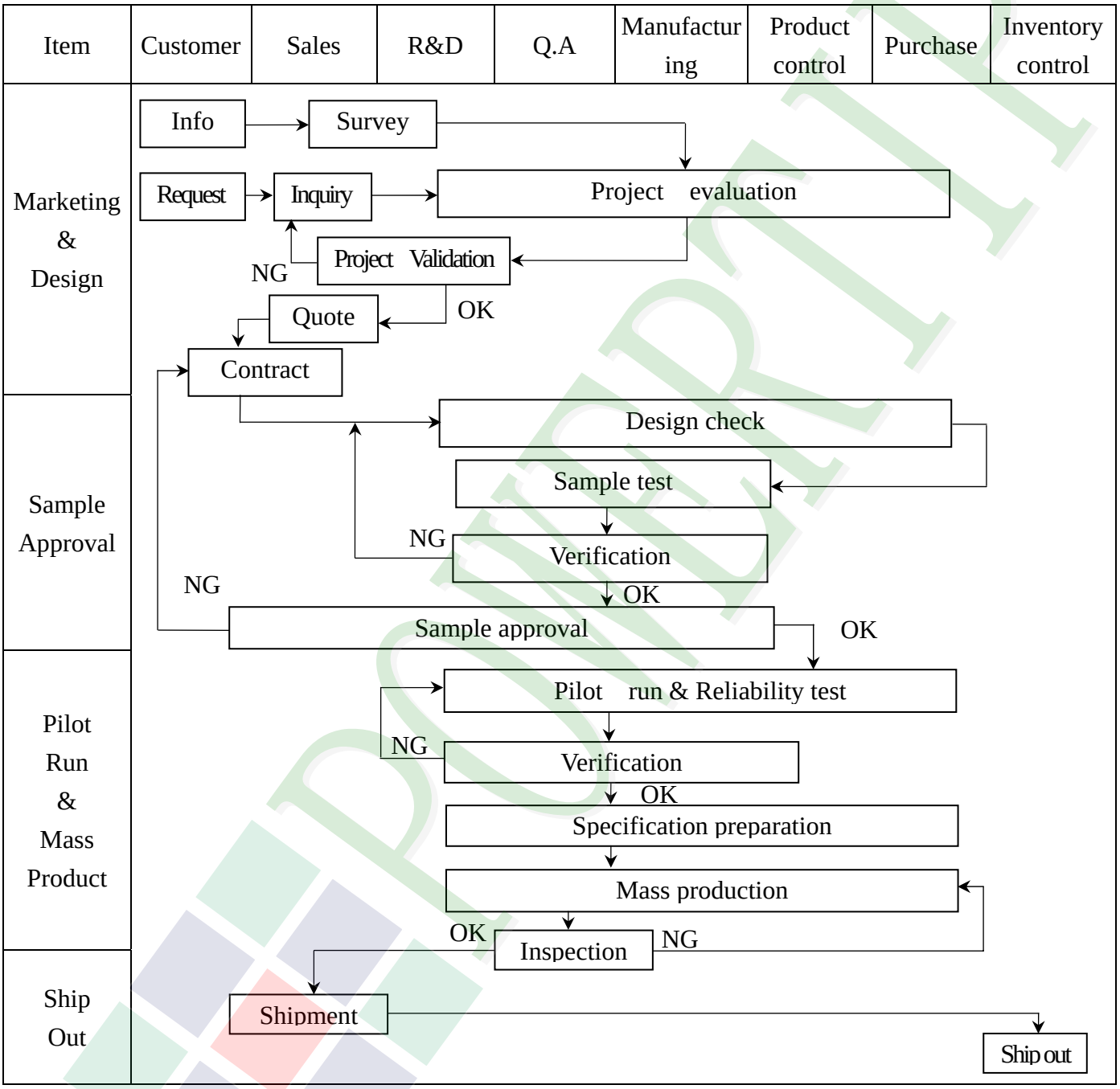

Item	Customer	Sales	R&D	Q.A	Manufacturing	Product control	Purchase	Inventory control
Sales Service	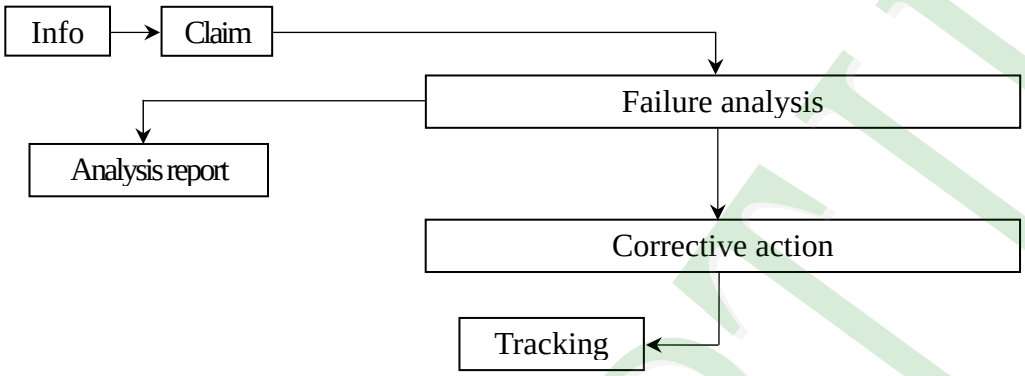							
Q.A Activity	1. ISO 9001 Maintenance Activities 2. Process improvement proposal 3. Equipment calibration 4. Education And Training Activities 5. Standardization Management							

3.2. Inspection Specification

◆Scope：The document shall be applied to TFT-LCD Module for 3.5″ ~10″ (Ver.B01).

◆Inspection Standard：MIL-STD-105E Table Normal Inspection Single Sampling Level Ⅱ.

◆Equipment：Gauge、MIL-STD、Powertip Tester、Sample

◆Defect Level：Major Defect AQL： 0.4 ; Minor Defect AQL： 1.5

◆OUT Going Defect Level：Sampling.

◆Standard of the product appearance test：

a. Manner of appearance test：

(1). The test best be under 20W×2 fluorescent light，and distance of view must be at 30 cm.

(2). The test direction is base on about around 45° of vertical line.

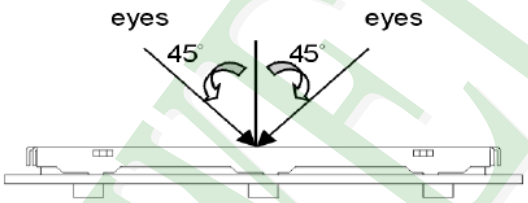

(3). Definition of area.

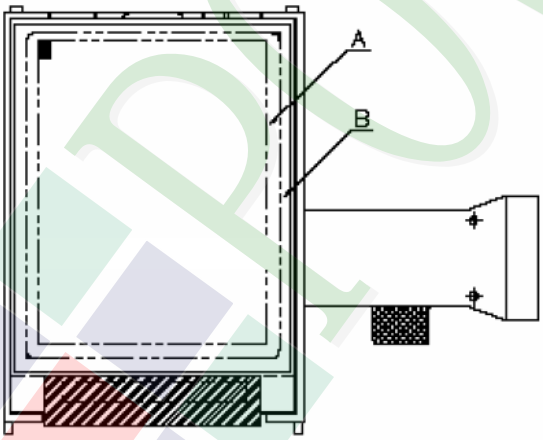

A area : viewing area

B area : Outside of viewing area

(4). Standard of inspection： (Unit：mm)

◆Specification For TFT-LCD Module 3.5″ ~10″ : (Ver.B01)

<table>
<tr><th>NO</th><th>Item</th><th>Criterion</th><th>Level</th></tr>
<tr><td rowspan="3">01</td><td rowspan="3">Product condition</td><td>1.1 The part number is inconsistent with work order of production.</td><td>Major</td></tr>
<tr><td>1.2 Mixed product types.</td><td>Major</td></tr>
<tr><td>1.3 Assembled in inverse direction.</td><td>Major</td></tr>
<tr><td>02</td><td>Quantity</td><td>2.1 The quantity is inconsistent with work order of production.</td><td>Major</td></tr>
<tr><td>03</td><td>Outline dimension</td><td>3.1 Product dimension and structure must conform to structure diagram.</td><td>Major</td></tr>
<tr><td rowspan="5">04</td><td rowspan="5">Electrical Testing</td><td>4.1 Missing line character and icon.</td><td>Major</td></tr>
<tr><td>4.2 No function or no display.</td><td>Major</td></tr>
<tr><td>4.3 Display malfunction.</td><td>Major</td></tr>
<tr><td>4.4 LCD viewing angle defect.</td><td>Major</td></tr>
<tr><td>4.5 Current consumption exceeds product specifications.</td><td>Major</td></tr>
<tr><td>05</td><td>Dot defect
(Bright dot、Dark dot)
On -display</td><td>
<table>
<tr><th colspan="2">Item</th><th>Acceptance (Q'ty)</th></tr>
<tr><td rowspan="4">Dot Defect</td><td>Bright Dot</td><td>≦ 4</td></tr>
<tr><td>Dark Dot</td><td>≦ 5</td></tr>
<tr><td>Joint Dot</td><td>≦ 3</td></tr>
<tr><td>Total</td><td>≦ 7</td></tr>
</table>
5.1 Inspection pattern：full white , full black , Red , Green and blue screens.
5.2 It is defined as dot defect if defect area ＞1/2 dot.
5.3 The distance between two dot defect ≧5 mm.
</td><td>Minor</td></tr>
</table>

◆Specification For TFT-LCD Module 3.5″ ~10″ : (Ver.B01)

<table>
<tr><th>NO</th><th>Item</th><th>Criterion</th><th>Level</th></tr>
<tr><td>06</td><td>Black or white dot、scratch、contamination

Round type
 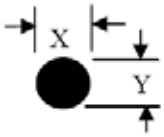

Φ=(x+y) / 2

Line type
 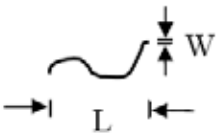
</td><td>6.1 Round type (Non-display or display) :
<table>
<tr><th rowspan="2">Dimension (diameter : Φ)</th><th colspan="2">Acceptance (Q'ty)</th></tr>
<tr><th>A area</th><th>B area</th></tr>
<tr><td>Φ ≦ 0.25</td><td>Ignore</td><td rowspan="4">Ignore</td></tr>
<tr><td>0.25 ＜ Φ ≦ 0.50</td><td>5</td></tr>
<tr><td>Φ ＞ 0.50</td><td>0</td></tr>
<tr><td>Total</td><td>5</td></tr>
</table>
6.2 Line type(Non-display or display) :
<table>
<tr><th rowspan="2">Length (L)</th><th rowspan="2">Width (W)</th><th colspan="2">Acceptance (Q'ty)</th></tr>
<tr><th>A area</th><th>B area</th></tr>
<tr><td>---</td><td>W ≦ 0.03</td><td>Ignore</td><td rowspan="4">Ignore</td></tr>
<tr><td>L ≦10.0</td><td>0.03 ＜ W ≦ 0.05</td><td>4</td></tr>
<tr><td>L ≦5.0</td><td>0.05 ＜ W ≦ 0.10</td><td>2</td></tr>
<tr><td>---</td><td>W ＞0.10</td><td>As round type</td></tr>
<tr><td colspan="2">Total</td><td>5</td><td></td></tr>
</table></td><td>Minor</td></tr>
<tr><td>07</td><td>Polarizer Bubble</td><td>
<table>
<tr><th rowspan="2">Dimension (diameter : Φ)</th><th colspan="2">Acceptance (Q'ty)</th></tr>
<tr><th>A area</th><th>B area</th></tr>
<tr><td>Φ ≦ 0.25</td><td>Ignore</td><td rowspan="5">Ignore</td></tr>
<tr><td>0.25 ＜ Φ ≦ 0.50</td><td>4</td></tr>
<tr><td>0.50 ＜ Φ ≦ 0.80</td><td>1</td></tr>
<tr><td>Φ ＞ 0.80</td><td>0</td></tr>
<tr><td>Total</td><td>5</td></tr>
</table></td><td>Minor</td></tr>
</table>

◆Specification For TFT-LCD Module 3.5″ ~10″ : (Ver:B01)

NO	Item	Criterion	Level
08	The crack of glass	Symbols : X : The length of crack Y : The width of crack. Z : The thickness of crack W : terminal length t : The thickness of glass a : LCD side length 8.1 General glass chip : 8.1.1 Chip on panel surface and crack between panels: 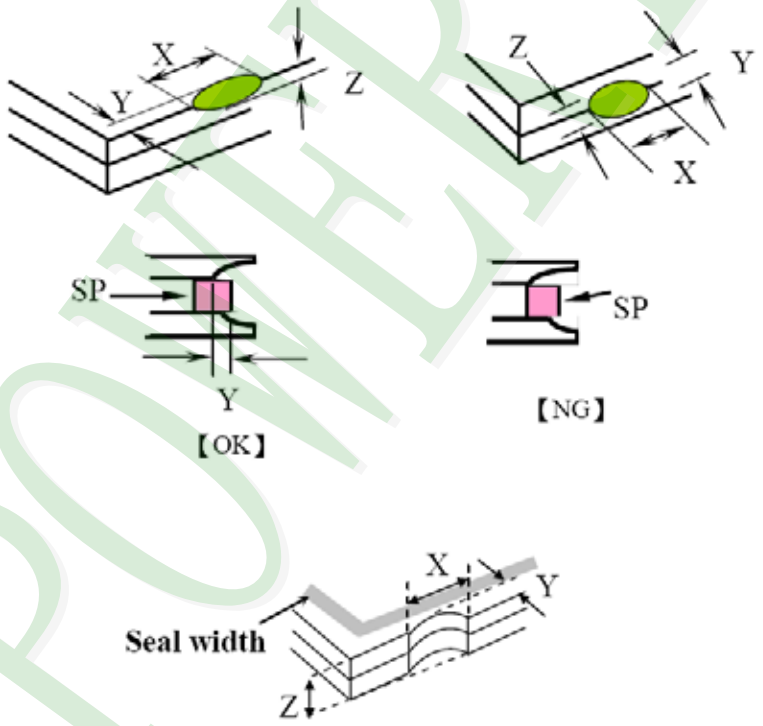 X: ≦ a; Y: Crack can't enter viewing area; Z: ≦1/2 t X: ≦ a; Y: Crack can't exceed the half of SP width.; Z: 1/2 t < Z ≦2 t	Minor

◆Specification For TFT-LCD Module 3.5″ ~10″ : (Ver.B01)

NO	Item	Criterion	Level
08	The crack of glass	Symbols : X : The length of crack Y : The width of crack. Z : The thickness of crack W : terminal length t : The thickness of glass a : LCD side length 8.1.2 Corner crack :	Minor

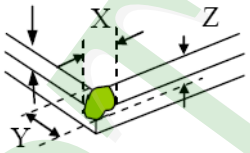

X	Y	Z
≦1/5 a	Crack can't enter viewing area	Z ≦ 1/2 t
≦1/5 a	Crack can't exceed the half of SP width.	1/2 t < Z ≦ 2 t

8.2 Protrusion over terminal :

8.2.1 Chip on electrode pad :

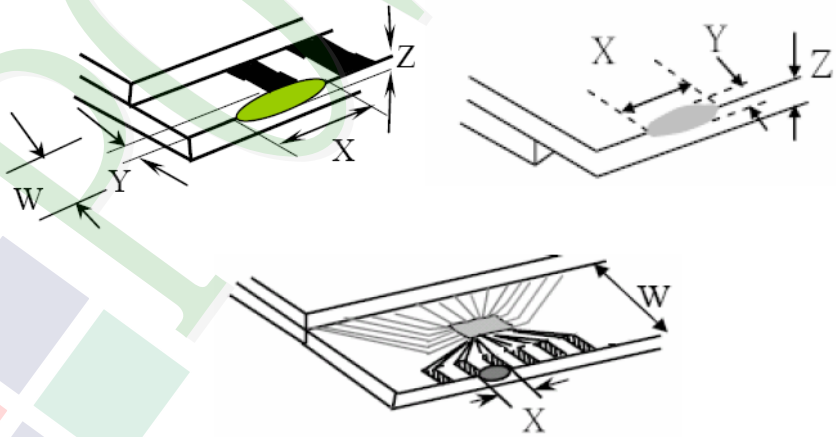

	X	Y	Z
Front	≦ a	≦ 1/2 W	≦ t
Back	≦ a	≦ W	≦ 1/2 t

◆Specification For TFT-LCD Module 3.5″ ~10″ : (Ver.B01)

NO	Item	Criterion	Level
08	The crack of glass	Symbols : X : The length of crack　　Y : The width of crack. Z : The thickness of crack　　W : terminal length t : The thickness of glass　　a : LCD side length 8.2.2 Non-conductive portion : 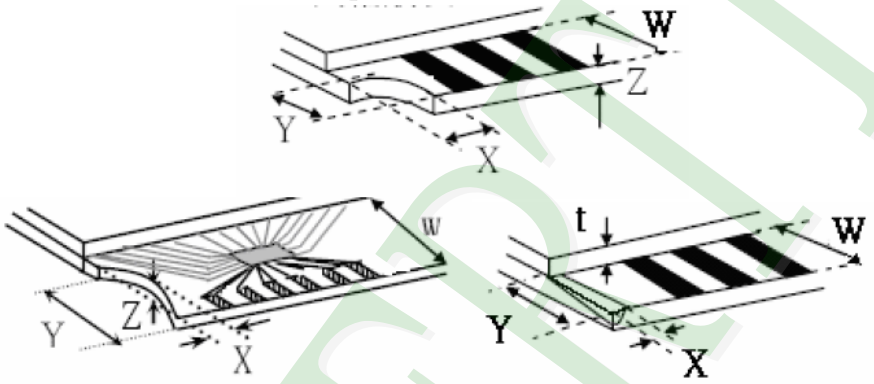 X: ≦ 1/3 a; Y: ≦ W; Z: ≦t ⊙ If the chipped area touches the ITO terminal, over 2/3 of the ITO must remain and be inspected according to electrode terminal specifications. 8.2.3 Glass remain : 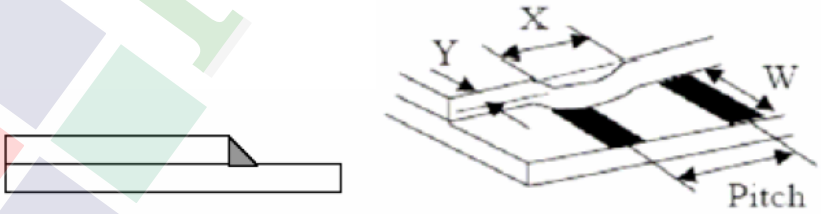 X: ≦ a; Y: ≦ 1/3 W; Z: ≦t	Minor

4. RELIABILITY TEST

4.1 Reliability Test Condition (VER.B01)

NO.	TEST ITEM	TEST CONDITION
1	High Temperature Storage Test	Keep in 80℃ ±2℃ 96 hrs Surrounding temperature, then storage at normal condition 4hrs.
2	Low Temperature Storage Test	Keep in -30℃ ±2℃ 96 hrs Surrounding temperature, then storage at normal condition 4hrs.
3	High Temperature / High Humidity Storage Test	Keep in +60 ℃ / 90% R.H duration for 96 hrs Surrounding temperature, then storage at normal condition 4hrs. (Excluding the polarizer)
4	Temperature Cycling Storage Test	-30℃ → +25℃ → +80℃ → +25℃ (30mins) (5mins) (30mins) (5mins) 10 Cycle Surrounding temperature, then storage at normal condition 4hrs.
5	ESD Test	Air Discharge: Apply 2 KV with 5 times Discharge for each polarity +/- Contact Discharge: Apply 250 V with 5 times discharge for each polarity +/- 1. Temperature ambiance : 15℃～35℃ 2. Humidity relative : 30%～60% 3. Energy Storage Capacitance(Cs+Cd) : 150pF±10% 4. Discharge Resistance(Rd) : 330Ω±10% 5. Discharge, mode of operation : Single Discharge (time between successive discharges at least 1 sec) (Tolerance if the output voltage indication : ±5%)
6	Vibration Test (Packaged)	1. Sine wave 10 55 Hz frequency (1 min/sweep) 2. The amplitude of vibration :1.5 mm 3. Each direction (X、Y、Z) duration for 2 Hrs
7	Drop Test (Packaged)	Packing Weight (Kg) / Drop Height (cm) 0 ~ 45.4 / 122 45.4 ~ 90.8 / 76 90.8 ~ 454 / 61 Over 454 / 46 Drop Direction :※1 corner / 3 edges / 6 sides each 1time.

5. PRECAUTION RELATING PRODUCT HANDLING

5.1 SAFETY

5.1.1 If the LCD panel breaks , be careful not to get the liquid crystal to touch your skin.

5.1.2 If the liquid crystal touches your skin or clothes , please wash it off immediately by using soap and water.

5.2 HANDLING

5.2.1 Avoid any strong mechanical shock which can break the glass.

5.2.2 Avoid static electricity which can damage the CMOS LSI—When working with the module , be sure to ground your body and any electrical equipment you may be using.

5.2.3 Do not remove the panel or frame from the module.

5.2.4 The polarizing plate of the display is very fragile. So , please handle it very carefully, do not touch , push or rub the exposed polarizing with anything harder than an HB pencil lead (glass , tweezers , etc.)

5.2.5 Do not wipe the polarizing plate with a dry cloth , as it may easily scratch the surface of plate.

5.2.6 Do not touch the display area with bare hands , this will stain the display area.

5.2.7 Do not use ketonics solvent & aromatic solvent. Use with a soft cloth soaked with a cleaning naphtha solvent.

5.2.8 To control temperature and time of soldering is 320 ± 10°C and 3-5 sec.

5.2.9 To avoid liquid (include organic solvent) stained on LCM.

5.3 STORAGE

5.3.1 Store the panel or module in a dark place where the temperature is 25°C ± 5°C and the humidity is below 65% RH.

5.3.2 Do not place the module near organics solvents or corrosive gases.

5.3.3 Do not crush , shake , or jolt the module.

5.4 TERMS OF WARRANTY

5.4.1 Applicable warrant period

The period is within thirteen months since the date of shipping out under normal using and storage conditions.

5.4.2 Unaccepted responsibility

This product has been manufactured to your company's specification as a part for use in your company's general electronic products. It is guaranteed to perform according to delivery specifications. For any other use apart from general electronic equipment, we cannot take responsibility if the product is used in nuclear power control equipment, aerospace equipment , fire and security systems or any other applications in which there is a direct risk to human life and where extremely high levels of reliability are required.

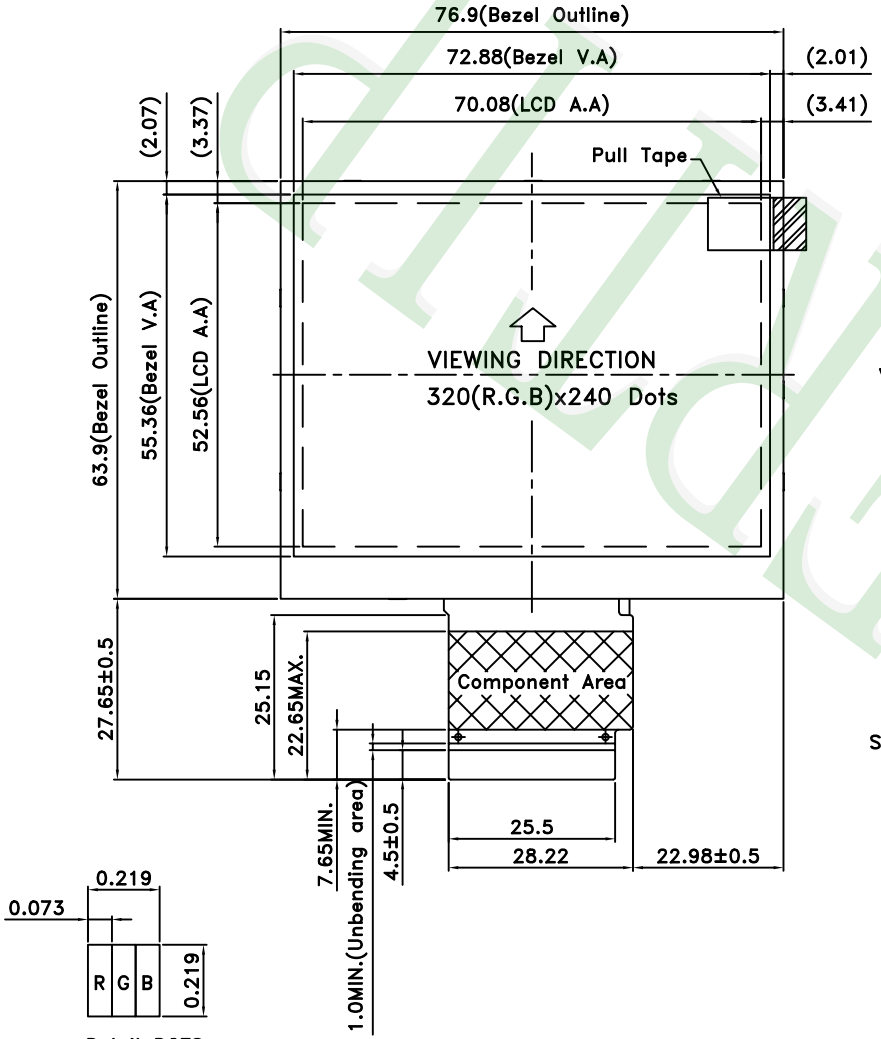

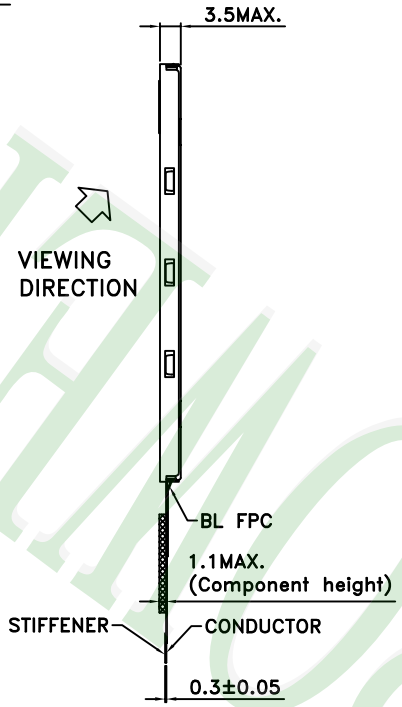

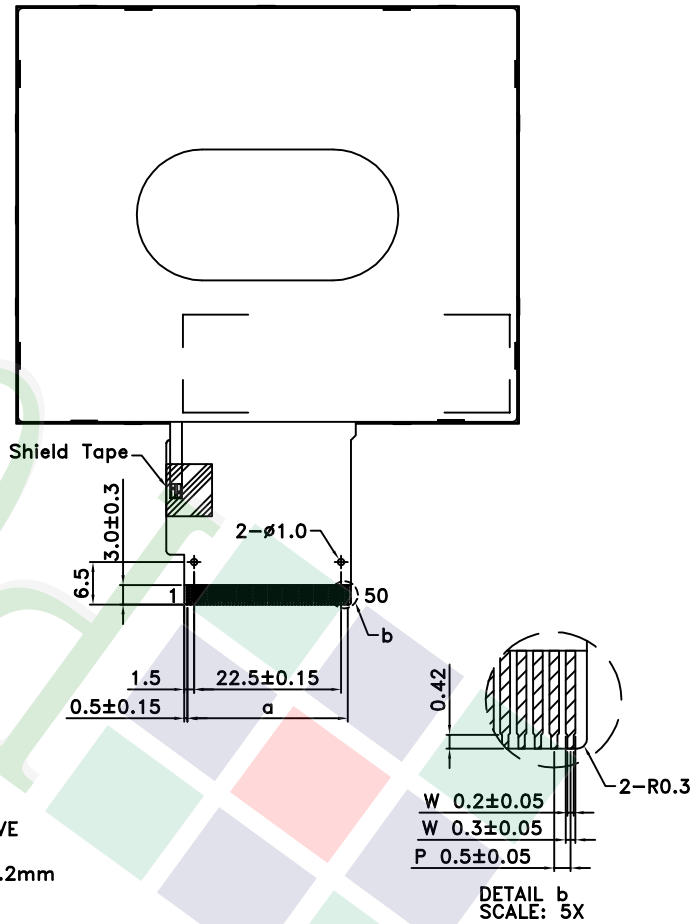

NOTES:
1.LCD TYPE: a-SI TFT
2.LCD DISPLAY: POSITIVE/TRANSMISSIVE
3.VIEW DIRECTION: 6 O'CLOCK
4.The tolerance unless classified ±0.2mm
5.a: PITCH 0.5X49=24.5±0.1

REV	REV BY	REVISER	DATE
007			
006			
005			
004			
003			
002			
001	NEW DRAWING	Mag	2010/06/30

PART NO: PH320240T-022-I-Q

DRAWING NAME : LMD-PH320240T-022-I-Q

TITLE: LCD MODULE DRAWING

久 正 光 電 股 份 有 限 公 司
POWERTIP TECHNOLOGY CORPORATION

Design	Mag	(3)	Surface		
Check	Tina	Unit	MM	Material	
Approve	Linda	Scale	FIT	Thickness	
		Page	1/1	Quantity	

Length(Mm) (mm) \ Tolerance / Precision	Precision Level
1 ~ 4	-
4 ~ 16	-
16 ~ 63	-
63 ~ 250	-
250 ~ 1000	-

PT-A-054-01

Ver.001

Documents NO.	PKG-PH320240T-022-I-Q

LCM包裝規格書
LCM Packaging Specifications (For Tray)

Approve	Check	Contact
Linda	Tina	Mag

1.包裝材料規格表 (Packaging Material) : (per carton)

No.	Item	Model	Dimensions (mm)	1Pcs Weight	Quantity	Total Weight
1	成品 (LCM)	PH320240T-022-I-Q	76.9 X 63.9	0.031	288	8.928
2	多層薄膜(1)POF	OTFILM0BA03ABA	19"X350X0.015	——	6	——
3	TRAY 盤 (2)Tray	TY32024001TZBA	352 X 260 X 10.8	0.0967	54	5.2218
4	內盒(3)Product Box	BX36627063ABBA	383 X 270 X 66	0.2692	6	1.6152
5	保利龍板(4)Polylon board	OTPLB00PL08ABA	550 X 393 X 20	0.0284	2	0.0568
6	外紙箱(5)Carton	BX57041027CCBA	570 X 410 X 265	1.4208	1	1.4208
7						
8						
9						

2.一 整箱總重量 (Total LCD Weight in carton) : 17.24 Kg±10%

3.單箱數量規格表 (Packaging Specifications and Quantity) :

(1)LCM quantity per box : no per tray 6 x no of tray 8 = 48

(2)Total LCM quantity in carton : quantity per box 48 x no of boxes 6 = 288

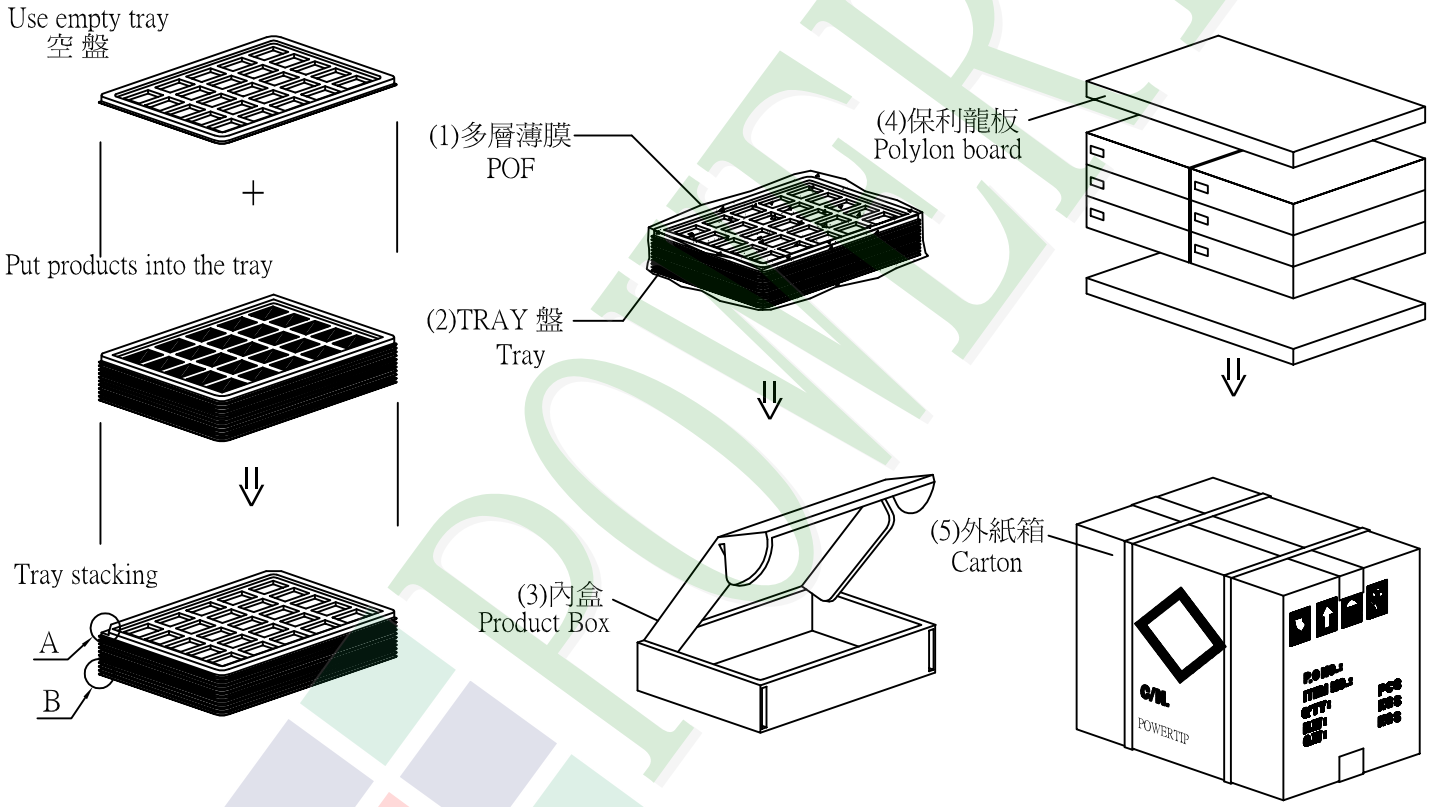

特 記 事 項 (REMARK)

4. Label Specifications :

TYPE			
ID.NO		S/O	
Q'TY	Pcs	Date	
Lot.NO			
Note			

參照"成品包裝點檢作業標準書"內容

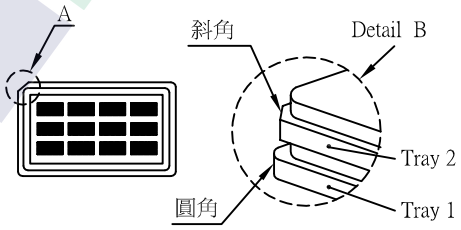

5.TRAY盤相疊時,需旋轉180度,請詳見B視圖
Rotate tray 180 degrees and place on top of stack.
Check the tray stack using Fig. B.

6. Tray料號:
Tray Number:PH320240T-001