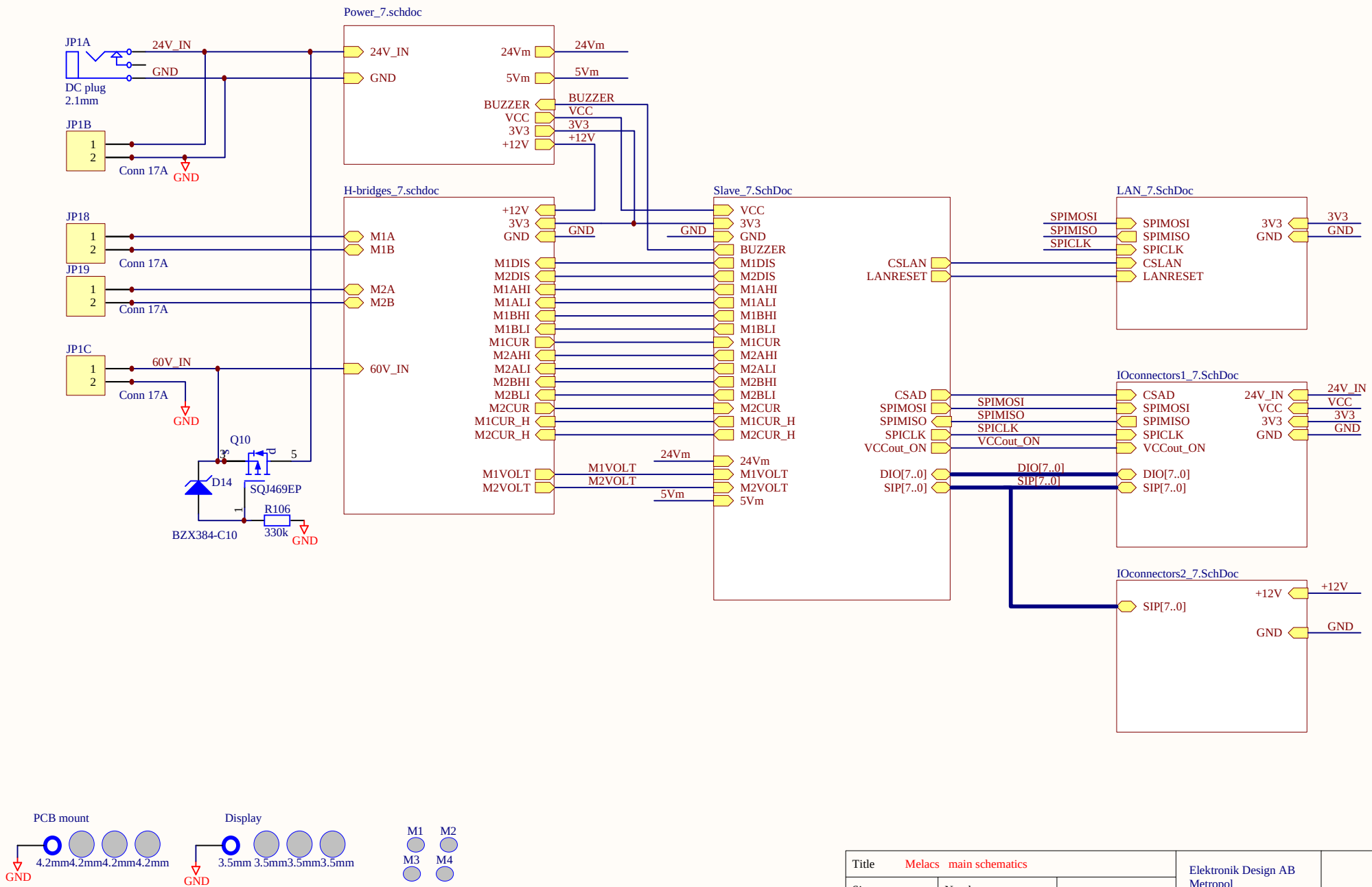

Title	Melacs main schematics	Elektronik Design AB Metropol 851 71 SUNDSVALL	
Size: A4	Number:	MELACS7 R2A	
Date: 2014-02-14	Time: 12:37:35	Sheet 1 of 7	stefan@edab.nu
File: Melacs_main_7.SCHDOC			

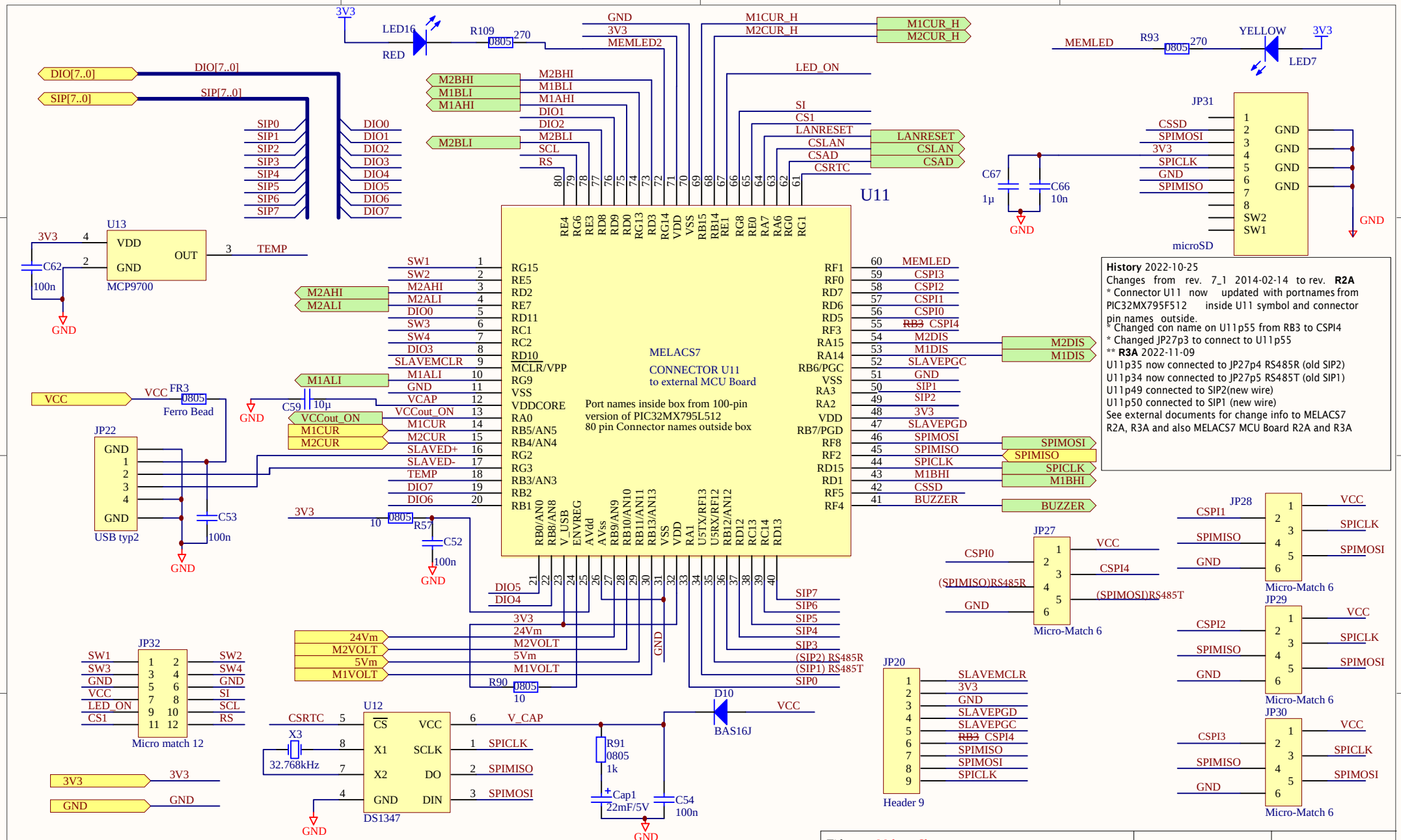
U11
MELACS7
CONNECTOR U11
to external MCU Board
Port names inside box from 100-pin
version of PIC32MX795L512
80 pin Connector names outside box
U13
MCP9700
JP22
USB typ2
JP31
microSD
JP32
Micro match 12
U12
DS1347
JP20
Header 9
JP27
JP28
JP29
JP30
Micro-Match 6
History 2022-10-25
Changes from rev. 7_1 2014-02-14 to rev. R2A
* Connector U11 now updated with portnames from PIC32MX795F512 inside U11 symbol and connector pin names outside.
* Changed con name on U11p55 from RB3 to CSPI4
* Changed JP27p3 to connect to U11p55
** R3A 2022-11-09
U11p35 now connected to JP27p4 RS485R (old SIP2)
U11p34 now connected to JP27p5 RS485T (old SIP1)
U11p49 connected to SIP2(new wire)
U11p50 connected to SIP1 (new wire)
See external documents for change info to MELACS7 R2A, R3A and also MELACS7 MCU Board R2A and R3A
Title Melacs Slave
Size: A4
Number:
MELACS7 R3A
Date: 2014-02-14
Time: 12:37:35
Sheet 2 of 7
File: Slave_7.SCHDOC
Elektronik Design AB
Metropol
851 71 SUNDSVALL
stefan@edab.nu

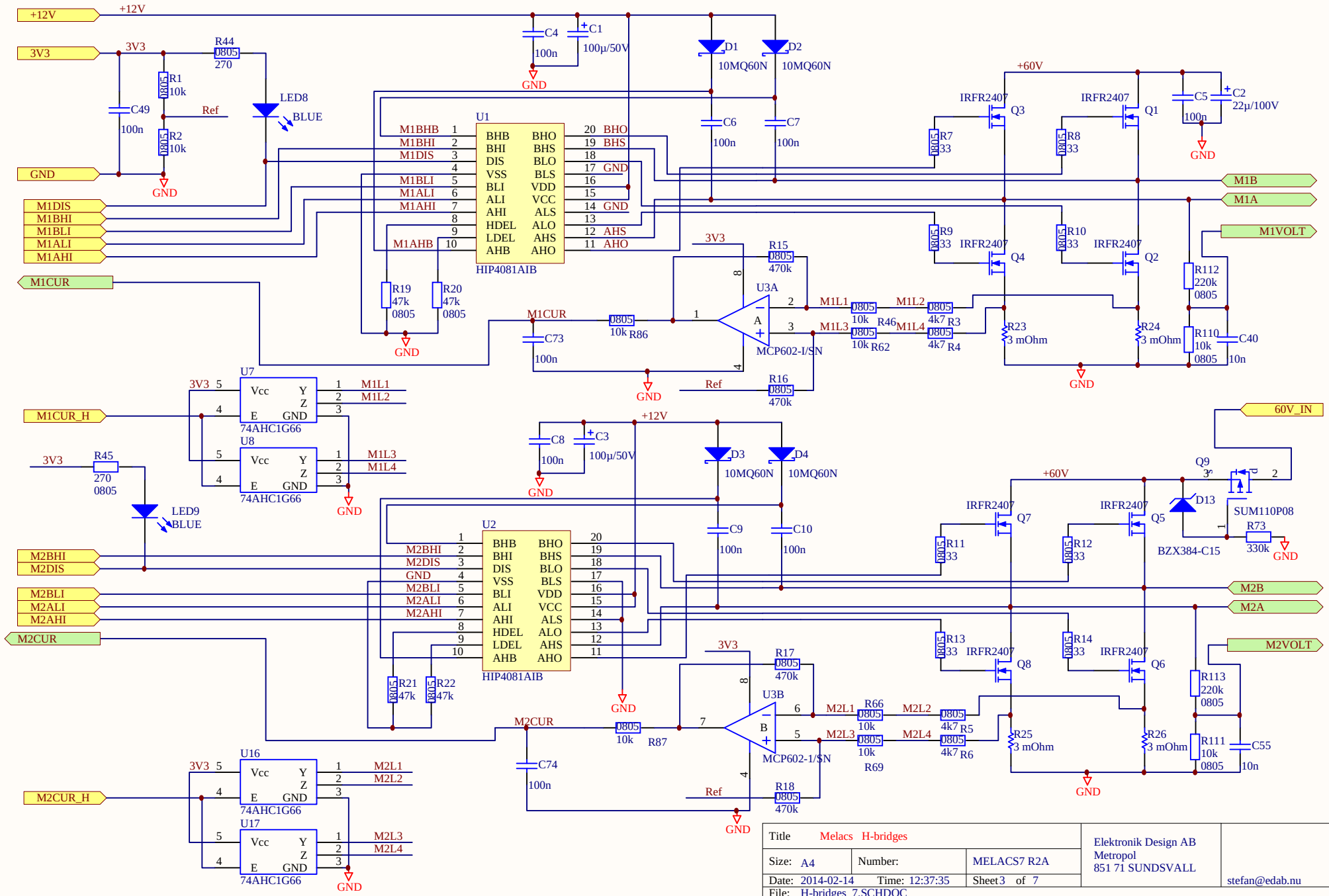

Title	Melacs H-bridges		Elektronik Design AB Metropol 851 71 SUNDSVALL
Size: A4	Number:	MELACS7 R2A	
Date: 2014-02-14	Time: 12:37:35	Sheet 3 of 7	stefan@edab.nu
File: H-bridges_7.SCHDOC			

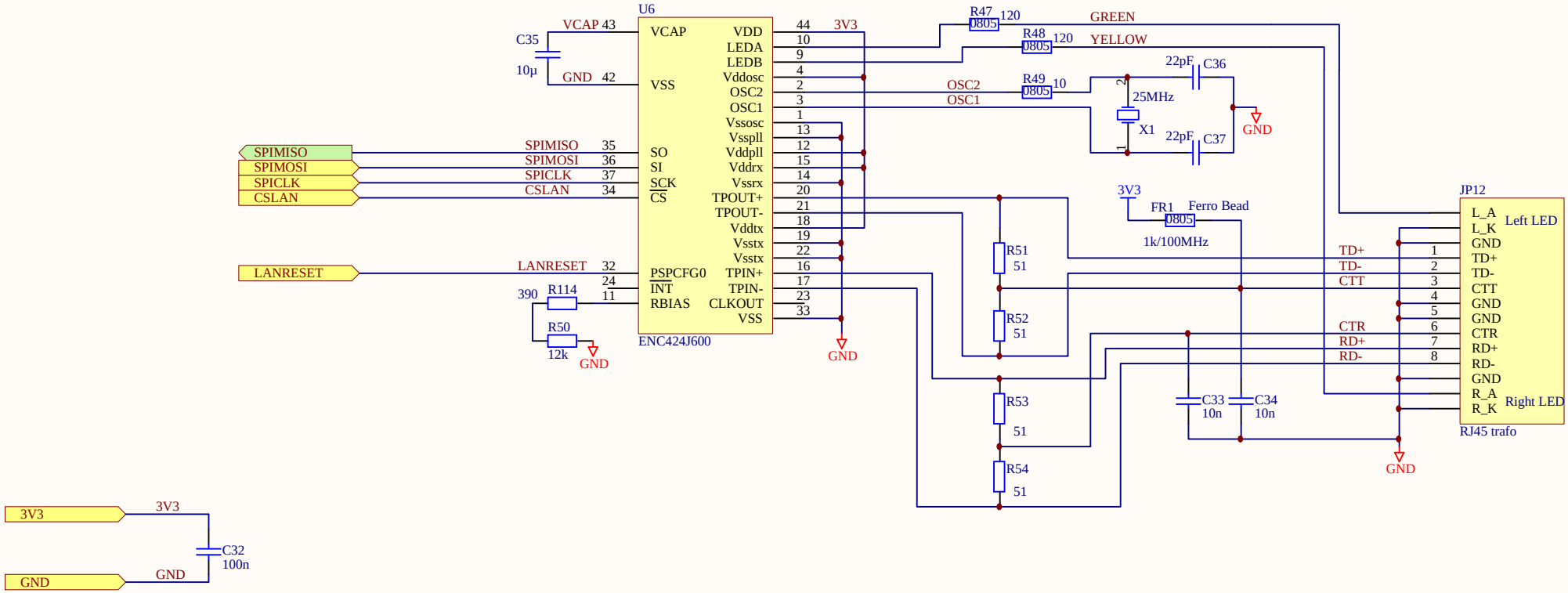
U6
ENC424J600
VCAP 43
VCAP
C35
10µ
GND 42
VSS
SPIMISO 35
SPIMOSI 36
SPICLK 37
CSLAN 34
SO
SI
SCK
CS
LANRESET 32
PSPCFG0
INT
RBIAS
390
R114
R50
12k
GND
VDD
LEDA
LEDB
Vddosc
OSC2
OSC1
Vssosc
Vsspll
Vddpll
Vddrx
Vssrx
TPOUT+
TPOUT-
Vddtx
Vsstx
Vsstx
TPIN+
TPIN-
CLKOUT
VSS
44 3V3
10
9
4
2
3
1
13
12
15
14
20
21
18
19
22
16
17
23
33
GND
R47 120
R48 120
R49 10
0805
GREEN
YELLOW
OSC2
OSC1
22pF C36
25MHz
X1
22pF C37
GND
3V3
FR1 Ferro Bead
1k/100MHz
R51 51
R52 51
R53 51
R54 51
C33 10n
C34 10n
GND
JP12
L_A
L_K
GND
TD+
TD-
CTT
GND
GND
CTR
RD+
RD-
GND
R_A
R_K
Left LED
Right LED
RJ45 trafo
TD+
TD-
CTT
CTR
RD+
RD-
1
2
3
4
5
6
7
8
3V3
GND
C32 100n
Title Melacs LAN
Size: A4
Number:
MELACS7 R2A
Date: 2014-02-14
Time: 12:37:35
Sheet 4 of 7
File: LAN_7.SCHDOC
Elektronik Design AB
Metropol
851 71 SUNDSVALL
stefan@edab.nu

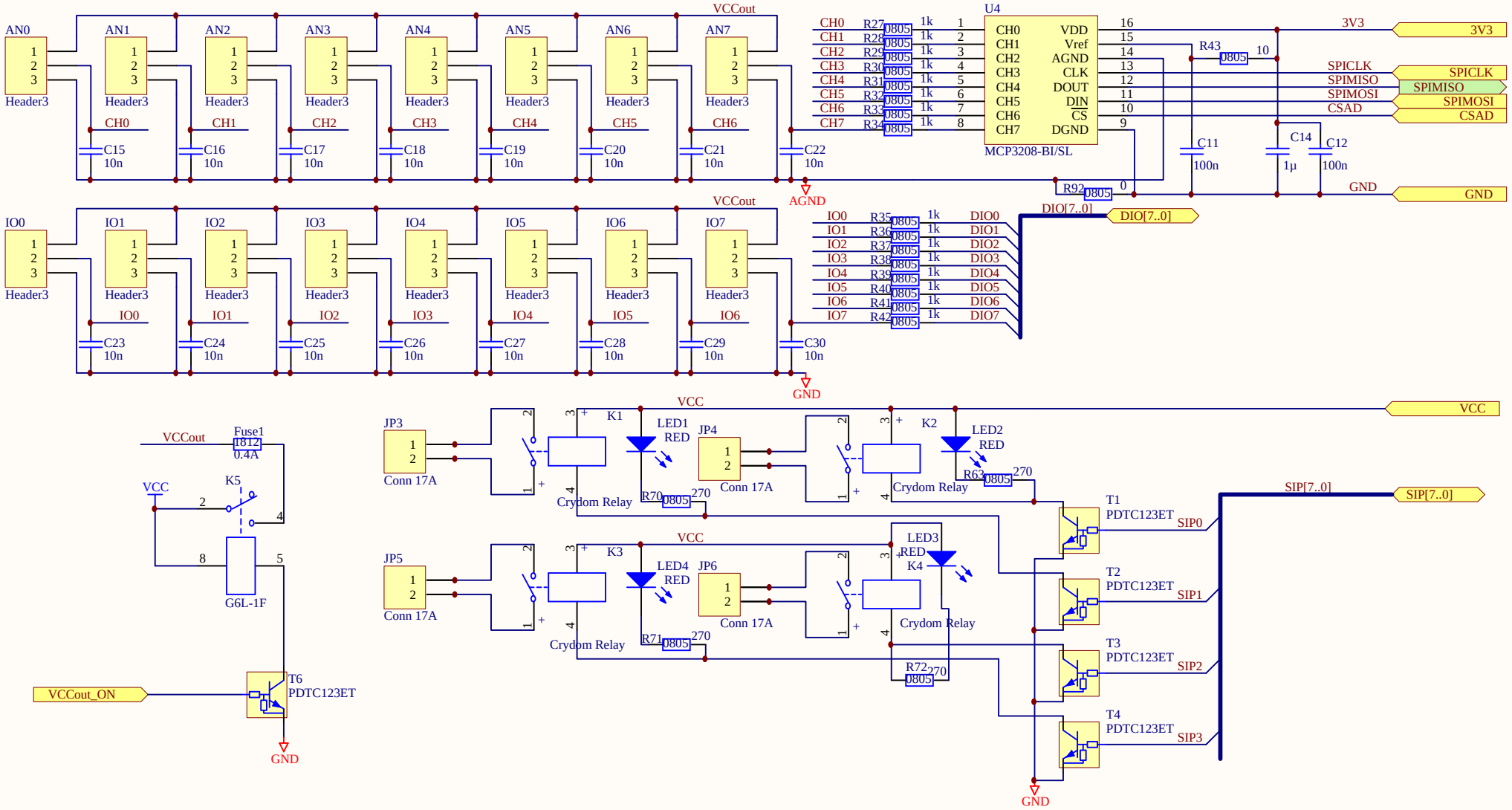

Title Melacs IO connectors1			Elektronik Design AB Metropol 851 71 SUNDSVALL
Size: A4	Number:	MELACS7 R2A	stefan@edab.nu
Date: 2014-02-14	Time: 12:37:35	Sheet 5 of 7	
File: IOconnectors1_7.SCHDOC			

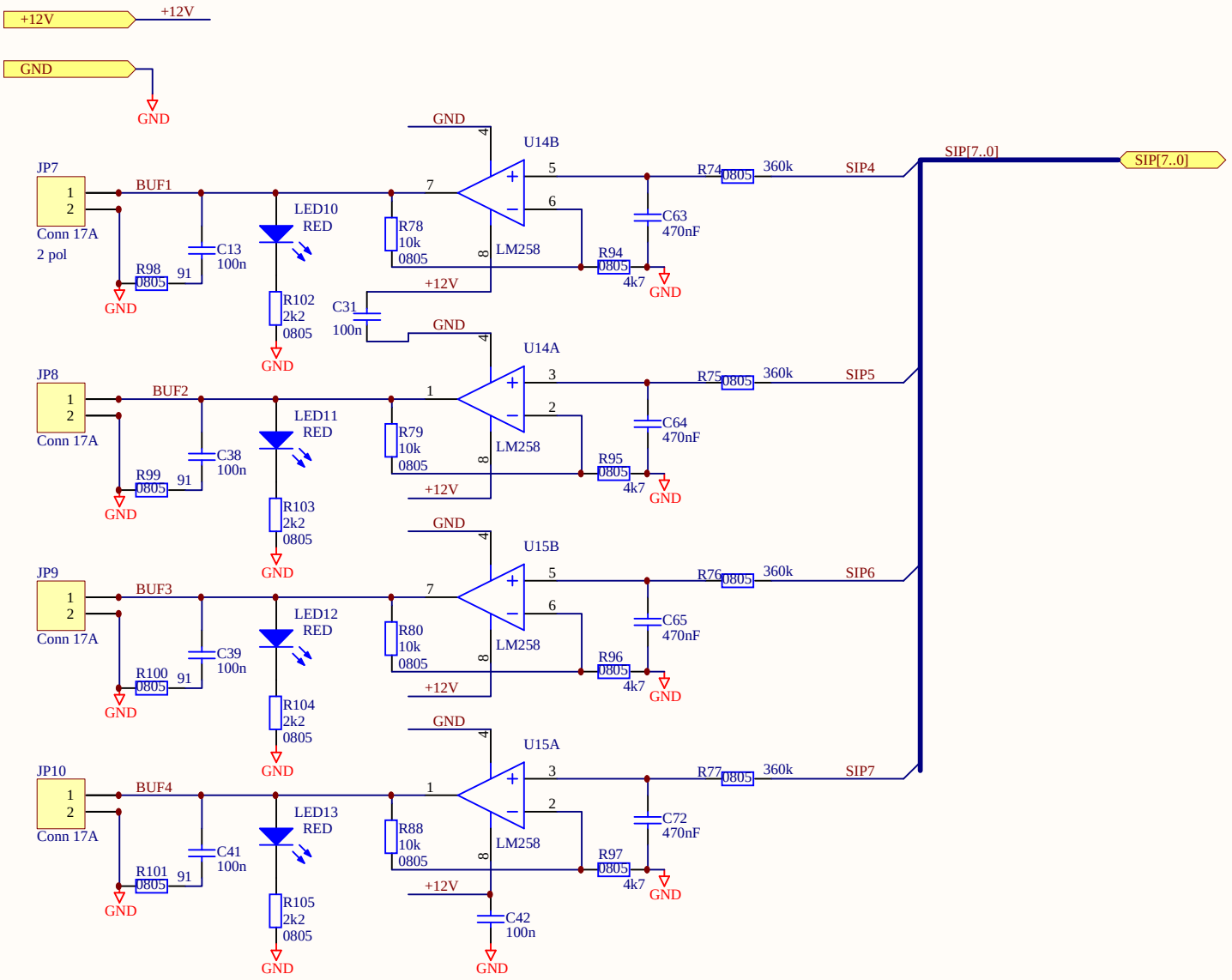

Title	Melacs IO connectors2	Elektronik Design AB Metropol 851 71 SUNDSVALL	
Size: A4	Number:	MELACS7 R2A	
Date: 2014-02-14	Time: 12:37:35	Sheet 6 of 7	stefan@edab.nu
File: IOconnectors2_7.SCHDOC			

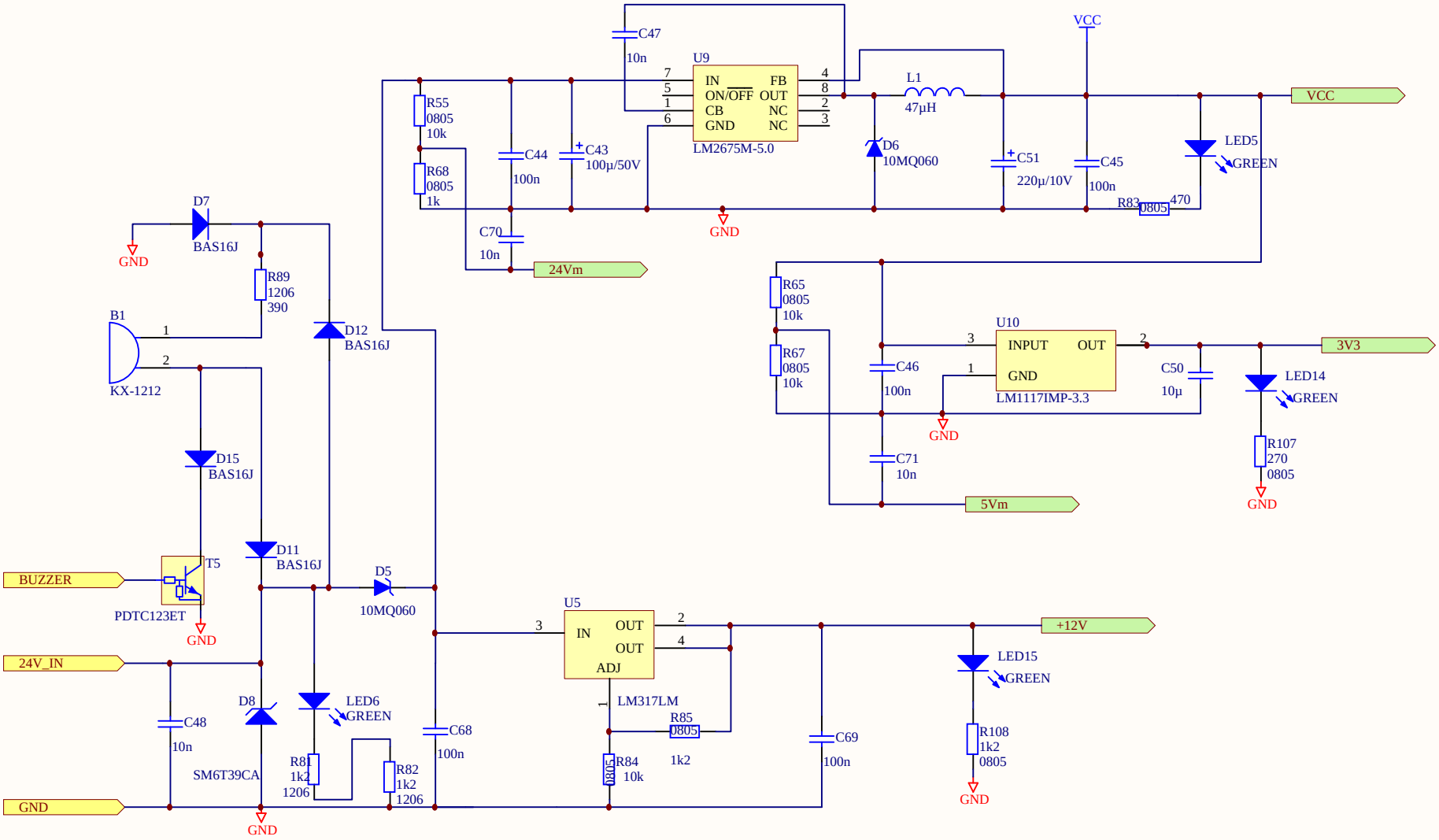

Title Melacs Power			Elektronik Design AB Metropol 851 71 SUNDSVALL
Size: A4	Number:	MELACS7 R2A	
Date: 2014-02-14	Time: 12:37:35	Sheet 7 of 7	stefan@edab.nu
File: Power_7.SCHDOC			