History

R2A 2022-01-25 Alf Gisslen
Added connection CSPI4 from MCU U1P51 to connector J1P55.

If CSP14 low MELACS7 is RS485 master.

R3A 2022-11-09 Rolf Blixt
J1P49 NC now SIP2(Relay) connected to U1P58 RA2
J1P50 NC now SIP1(Relay) connected to U1P59 RA3
J1P34/U1P39 SIP1 renamed to RS485T U5TX
J1P35/U1P40 SIP2 renamed to RS485R U5RX

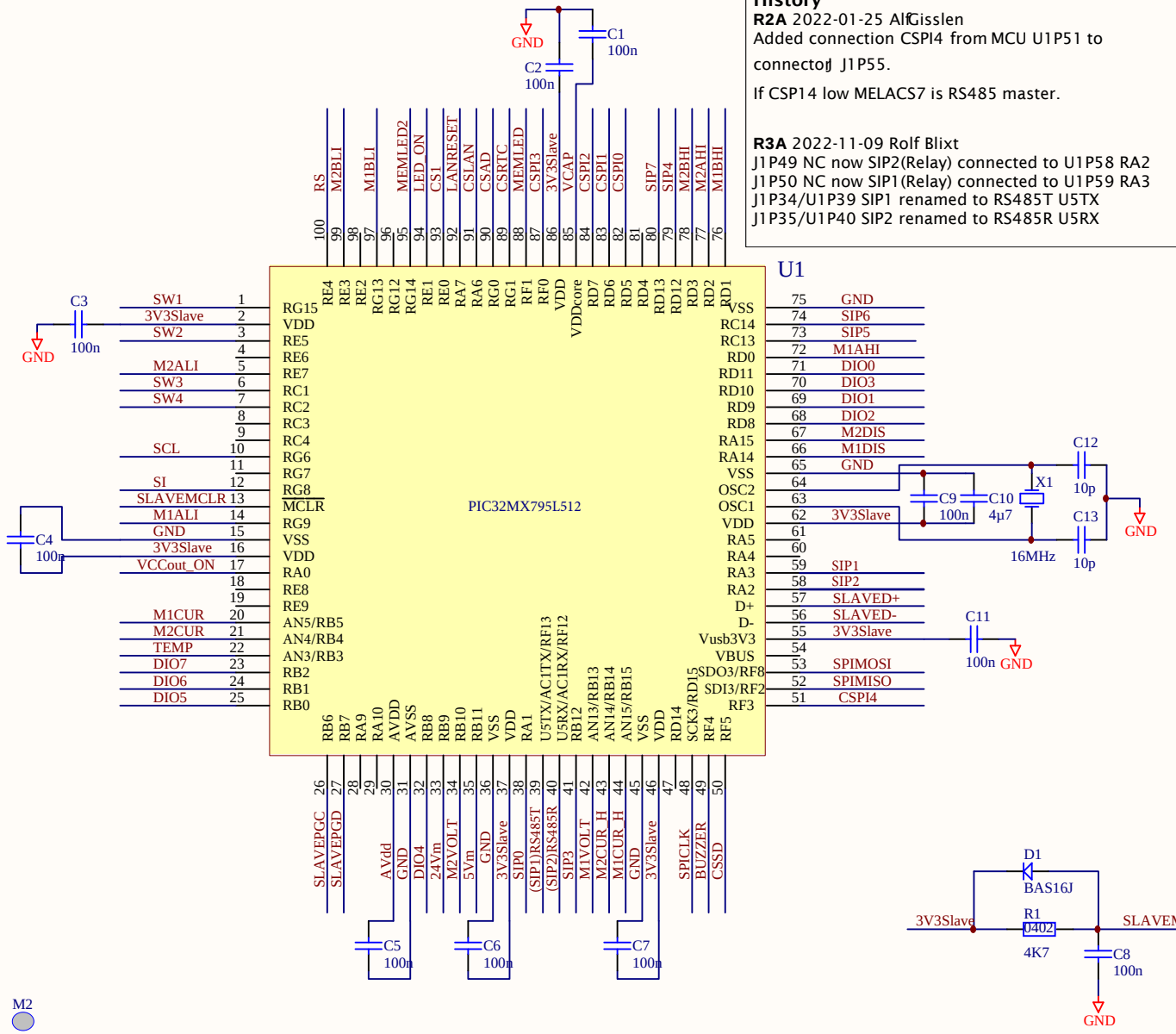

Production marks

Connector J1 seen from back

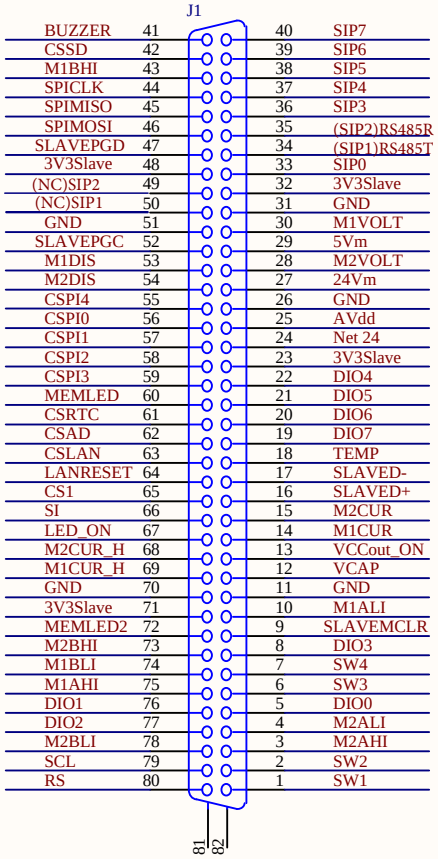

Title	Melacs, processorkort		Elektronik Design AB Metropol 851 71 SUNDSVALL
Size: A4	Melacs7 MCU Board	R3A	
Date: 2014-10-06	Time: 16:17:36	Sheet 1 of 1	stefan@edab.nu
File: melacs_7 processorkort_2.SCHDOC			