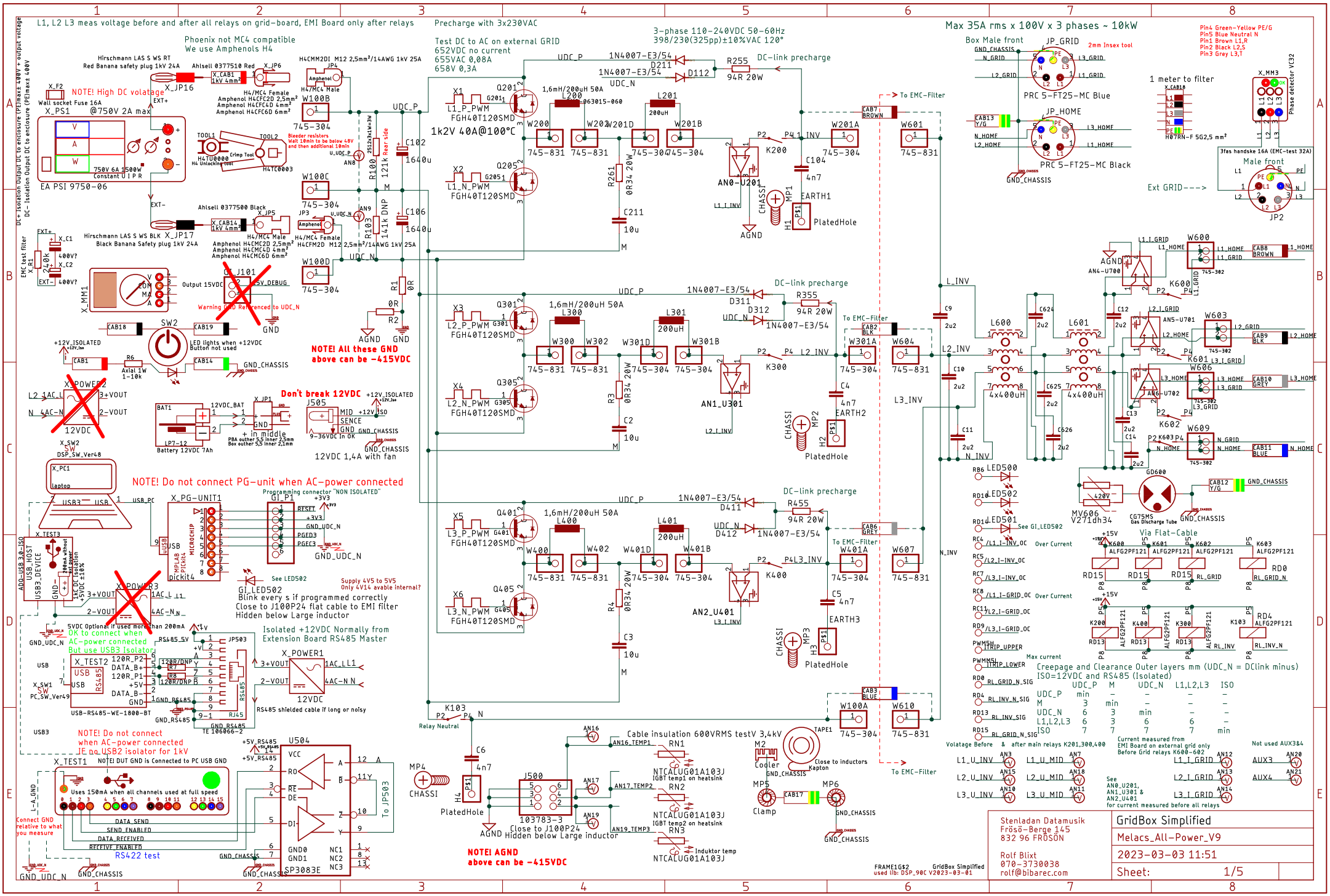
L1, L2 L3 meas voltage before and after all relays on grid-board, EMI Board only after relays
Phoenix not MC4 compatible
We use Amphenols H4
Precharge with 3x230VAC
Test DC to AC on external GRID
652VDC no current
655VAC 0,08A
658V 0,3A
3-phase 110-240VDC 50-60Hz
398/230(325pp)±10%VAC 120°
Max 35A rms x 100V x 3 phases ~ 10kW
Pin4 Green-Yellow PE/G
Pin5 Blue Neutral N
Pin1 Brown L1,R
Pin2 Black L2,S
Pin3 Grey L3,T
NOTE! High DC volatage
EA PSI 9750-06
1k2V 40A@100°C
DC-link precharge
PRC 5-FT25-MC Blue
PRC 5-FT25-MC Black
1 meter to filter
Ext GRID--->
NOTE! All these GND above can be -415VDC
Don't break 12VDC
12VDC 1,4A with fan
NOTE! Do not connect PG-unit when AC-power connected
Isolated +12VDC Normally from Extension Board RS485 Master
NOTE! Do not connect when AC-power connected JE no USB2 isolator for 1kV
RS422 test
NOTE! AGND above can be -415VDC
Creepage and Clearance Outer layers mm (UDC_N = DClink minus)
ISO=12VDC and RS485 (Isolated)
Stenladan Datamusik
Frösö-Berge 145
832 96 FRÖSÖN
Rolf Blixt
070-3730038
rolf@bibarec.com
GridBox Simplified
Melacs_All-Power_V9
2023-03-03 11:51
Sheet: 1/5