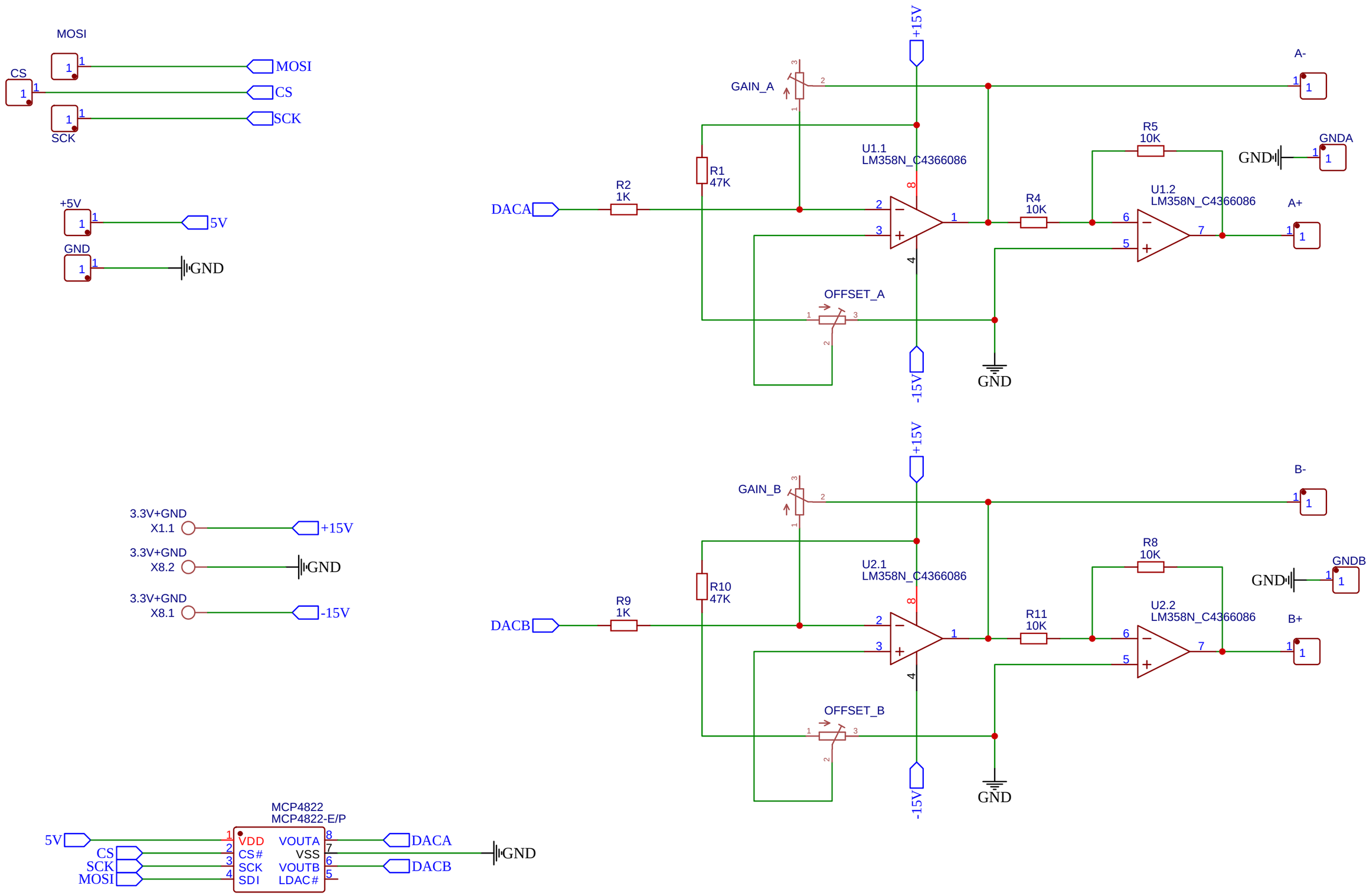

TITLE: Sheet_2	REV: 1.0
EasyEDA	Company: Your Company
	Sheet: 1/1
	Date: 2021-08-27 Drawn By: stefan.neumeister