USB GPIO Breakout Board

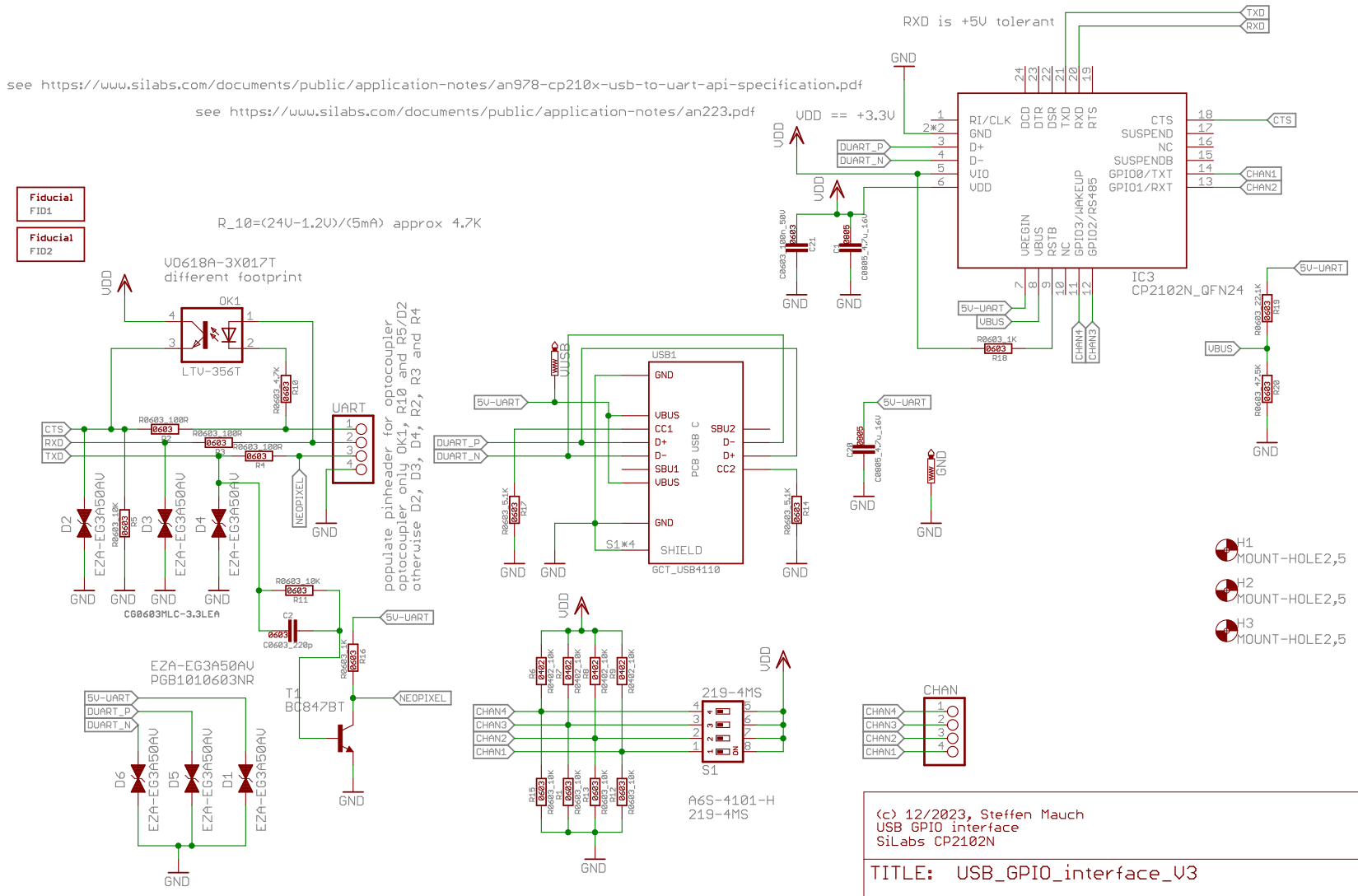

(c) 12/2023, Steffen Mauch
USB GPIO interface
SiLabs CP2102N

TITLE: USB_GPIO_interface_V3

Document Number:

REV:

Date: 20.05.2024 21:05:46

Sheet: 1/1