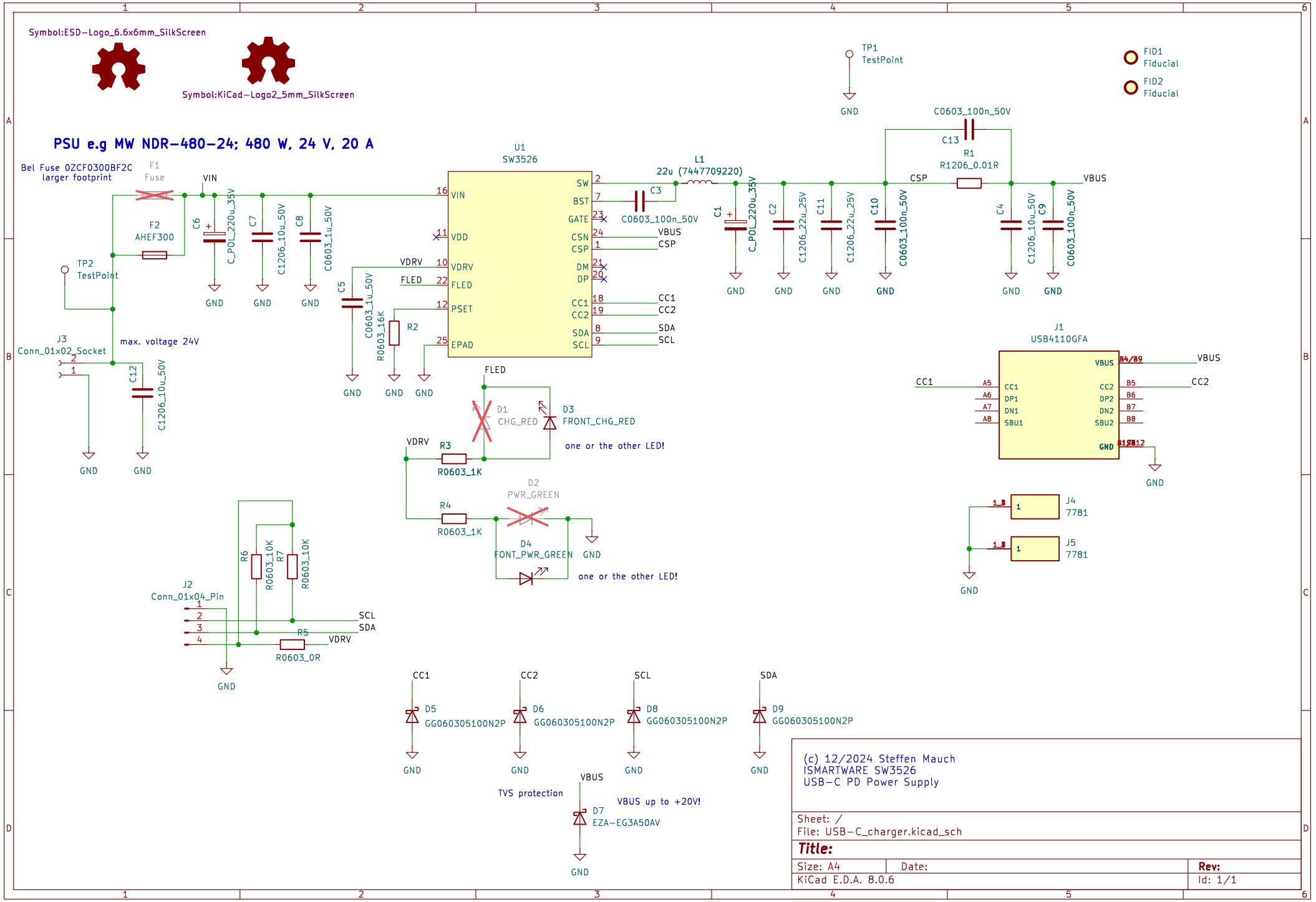
Symbol:ESD-Logo_6.6x6mm_SilkScreen
Symbol:KiCad-Logo2_5mm_SilkScreen
PSU e.g MW NDR-480-24; 480 W, 24 V, 20 A
Bel Fuse 0ZCF0300BF2C
larger footprint
F1
Fuse
F2
AHEF300
VIN
TP2
TestPoint
J3
Conn_01x02_Socket
max. voltage 24V
C6
C_POL_220u_35V
C7
C1206_10u_50V
C8
C0603_1u_50V
C12
C1206_10u_50V
GND
U1
SW3526
VIN
VDD
VDRV
FLED
PSET
EPAD
SW
BST
GATE
CSN
CSP
DM
DP
CC1
CC2
SDA
SCL
C5
C0603_1u_50V
R0603_16K
R2
VDRV
FLED
C3
C0603_100n_50V
L1
22u (7447709220)
C1
C_POL_220u_35V
C2
C1206_22u_25V
C11
C1206_22u_25V
C10
C0603_100n_50V
C13
C0603_100n_50V
R1
R1206_0.01R
CSP
VBUS
C4
C1206_10u_50V
C9
C0603_100n_50V
TP1
TestPoint
FID1
Fiducial
FID2
Fiducial
J1
USB4110GFA
VBUS
CC1
CC2
DP1
DN1
SBU1
DP2
DN2
SBU2
GND
A4/B9
B5
B6
B7
B8
A12/B12
J4
7781
J5
7781
FLED
D1
CHG_RED
D3
FRONT_CHG_RED
one or the other LED!
VDRV
R3
R0603_1K
D2
PWR_GREEN
R4
R0603_1K
D4
FONT_PWR_GREEN
one or the other LED!
J2
Conn_01x04_Pin
R6
R0603_10K
R7
R0603_10K
SCL
SDA
R5
R0603_0R
VDRV
CC1
CC2
SCL
SDA
D5
GG060305100N2P
D6
GG060305100N2P
D8
GG060305100N2P
D9
GG060305100N2P
VBUS
TVS protection
D7
EZA-EG3A50AV
VBUS up to +20V!
(c) 12/2024 Steffen Mauch
ISMARTWARE SW3526
USB-C PD Power Supply
Sheet: /
File: USB-C_charger.kicad_sch
Title:
Size: A4
Date:
Rev:
KiCad E.D.A. 8.0.6
Id: 1/1