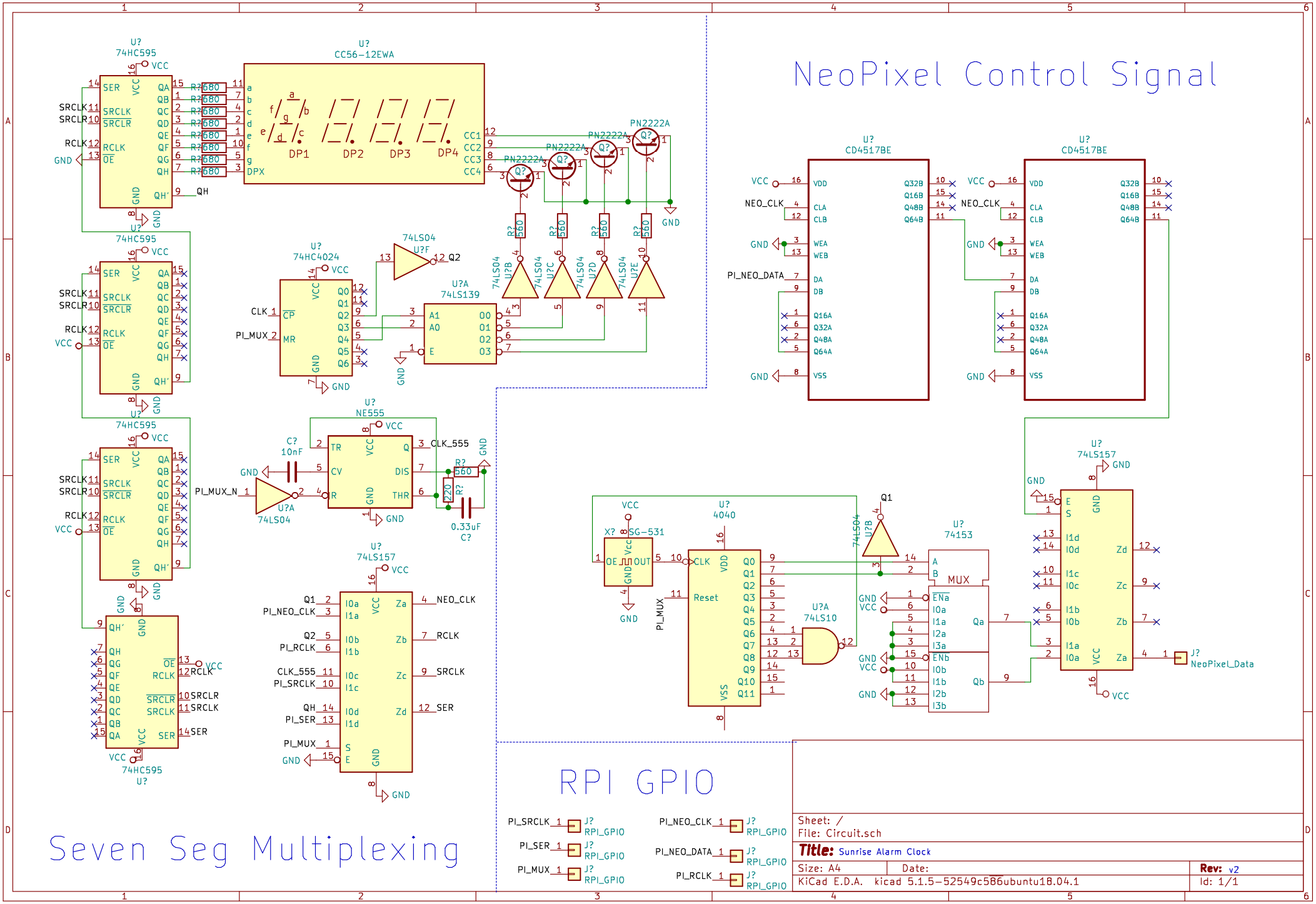
NeoPixel Control Signal
Seven Seg Multiplexing
RPI GPIO
U? 74HC595
U? CC56-12EWA
U? 74HC4024
U? NE555
U? 74LS157
U? CD4517BE
U? 4040
U? 74153
U?A 74LS139
U?A 74LS10
74LS04
PN2222A
SG-531
J? NeoPixel_Data
J? RPI_GPIO
Sheet: /
File: Circuit.sch
Title: Sunrise Alarm Clock
Size: A4
Date:
Rev: v2
KiCad E.D.A. kicad 5.1.5-52549c586ubuntu18.04.1
Id: 1/1