WARNING!

- Make sure that there are no non-unsuitable object on top of the heater or in the sauna room before starting the sauna heater.
- Do not cover the sauna heater. This creates a fire hazard.
- Do not touch the top of the heater. This will cause severe burns.
- Incorrect ventilation or an incorrectly located sauna heater can, under certain circumstances, cause excessive drying of the wood in the sauna and create a fire hazard.
- Cover sauna floors with a non-slip material.
- Never hose down the sauna.
- There must always be at least 50 mm insulation directly behind the wood panelling in the sauna (no other material may be used, such as particle board, plaster, etc).
- Sauna doors must always open outwards. All that should be needed to open the sauna door is just a little light pressure.
- Do not use the sauna for any purpose other than sauna bathing.
- Do not install more than one sauna heater in a sauna room, unless you follow exactly the special instructions for twin-heater installations.
- Sauna fragrances, etc. may ignite if poured undiluted into the stone compartment.
- Never leave young children unattended in the sauna.
- Sauna bathing is not always suitable for persons in poor health. Consult your doctor for advice.
- Store this information in a safe place.

INSTALLATION

Fig. 1.

Sauna heater Tylö MPE with separate control panel. The control panel is mounted on the wall inside the sauna room, no more than 1000 mm above floor level.

Fig. 2.

Tylö Sport sauna heater with integral control panel.

Fig. 3.

Tylö SK, SE, SD or SDK sauna heater with separate TS or CC control panel (type SE only uses a CC panel).

Installing the sauna heater.

The sauna heater should be placed on the same wall as the door, see figure 13. In an exceptional circumstance, the heater may be placed on a side wall, but as close as possible to the wall with the door. Fit the heater 270 mm above the floor, observing the regulations for the minimum distance to the side wall. You can use the box which contains the sauna stones to help you when installing Tylö heaters. When placed on its short end, the box is 270 mm high.

Tylö sauna heaters are connected by a standard cable (Fk or EKK) approved for permanent installation. The cable (EKK) or conduit is laid on the outside of any heating insulation; see figs. 9, 10 and 11. A single-core cable (Fk) should be protected by a plastic conduit up to the heater, or in flexible metal conduit with internal insulation.

When the heater has been installed, a set screw (I, figs. 9, 10 and 11) locks it in place so that the heater cannot be removed from the wall.

Fig. 4 – Minimum safety distances.

A = standard installation. **B =** recess installation. Please refer to the table for minimum distances to side wall (X,Y). When installing SK, SE, SD, MPE or SDK sauna heaters in a recess, the sensor (C) should be placed 250 mm from the rear wall of the recess and 1500 mm above floor level.

Fig. 5 – Minimum safety distances.

Minimum distance to sauna fittings in front of a sauna heater.

Fig. 6 – Sauna

(Sauna heater types SK, SD, SDK and control panel type CC).

1 = sauna heater. **2 =** thermistor (sensor). **3 =** control panel CC 10/ CC 50/ CC 100. **4 =** external power switch (if any). **5 =** distribution box. **6 =** relay box RB30/60.

Fig. 7 – Sauna

(Sauna heater type MPE and control panel type CC MPE).

1 = sauna heater. **2 =** thermistor (sensor). **3 =** control panel CC MPE. **4 =** distribution box.

Fig. 8 – Sauna

(Sauna heater type SE and control panel type CC).

1 = sauna heater. **2 =** thermistor (sensor). **3 =** control panel CC 10/ CC 50/ CC 100. **4 =** external power switch (if any). **5 =** distribution box.

Fig. 9 – MPE.

A = electric conduit. **B =** wooden panel. **C =** insulation behind control panel. **D =** sensor. **E =** capillary tube/thermistor wire. **F =** separate control panel (MPE CC). **G =** vent. **H =** wooden batten. **I =** set screw.

Fig. 10 – Sport.

A = electric conduit. **B =** wooden panel. **C =** insulation. **D =** built-in sensor. **F =** built-in control panel (Sport). **G =** vent. **H =** wooden batten. **I =** set screw.

Wiring diagram, fig. 21, 31, 37.

Fig. 11 – SK, SE, SD and SDK.

A = electric conduit. **B =** wooden panel. **C =** insulation behind control panel. **D =** sensor. **E =** capillary tube/thermistor wire. **F =** TS separate control panel (CC panel in folded figure). **G =** vent.
H = wooden batten. **I =** set screw.

Amperage and conductor area:

kW	230-240V 3~		230-240V~		400-415V 3~		400-415V 2N~		200-208V~		200-208V 3~	
	amp	mm²	amp	mm²	amp	mm²	amp	mm²	amp	mm²	amp	mm²
6,6	17	4	29	10	10	1,5	-	-	33	10	19	4
8	20	4	35	10	12	2,5	-	-	40	16	23	6
10,7	27	10	47*	16*	16	2,5	-	-	-	-	31	10
16	40	16	-	-	23	6	-	-	-	-	47	16
20	50	16	-	-	29	10	-	-	-	-	58	25

*) 10,7 kW not approwed for single-phase in Europe.

Volume and minimum installation distances:

kW	Sauna volume min/max m³	Min. distance from side wall (mm) standard installation "X"	Min. distance from side wall (mm) recess installation "Y"	Minimum ceiling height in sauna (mm)
6.6	4 – 8	110	200	1900
8	6 – 12	110	200	1900
10.7	10 – 18	150	200	1900
16	15 – 35	150	350	2100
20	22 – 43	150	350	2100

*) Saunas with a heater installed in a recess must have a minimum volume of 4 cu.m.

Sauna heater – separate control panel combinations

Heater model	Suitable control panel 230-240V 3~	230-240V~	400-415V 3~	200-208V~	200-208V 3~
SE 6, SE 8	CC 10, CC 50, CC 100	CC 10, CC 50, CC 100	CC 10, CC 50, CC 100	CC 10, CC 50, CC 100	CC 10, CC 50, CC 100
SK 6, SK 8, SD 10, SDK 10	TS 30, CC 10 / RB 30, CC 50 / RB 30, CC 100/RB30	*TS 30, CC 10 / RB 30, CC 50 / RB 30, CC 100 / RB30	TS 16, TS 30, CC 10 / RB 30, CC 50 / RB 30, CC 100 / RB30	*TS 30, CC 10 / RB 30, CC 50 / RB 30, CC 100 / RB30	TS 30, CC 10 / RB 30, CC 50 / RB 30, CC 100 / RB 30
SD 16	TS 58 -12 RB CC 10 / RB 60, CC 50 / RB 60 CC100 / RB 60	-	TS 30, CC 10 / RB 30, CC 50 / RB 30, CC 100 / RB 30	-	TS 58 -12 RB CC 10 / RB 60, CC 50 / RB 60 CC100 / RB 60
SD 20	TS 58 -12 RB CC 10 / RB 60, CC 50 / RB 60 CC100 / RB 60	-	TS 58 -12 RB CC 10 / RB 60, CC 50 / RB 60 CC100 / RB 60	-	TS 58 -12 RB CC 10 / RB 60, CC 50 / RB 60 CC100 / RB 60

*) 10,7 kW not approwed for single-phase in Europe.

Installation of separate control panels.

Must be assembled outside the sauna. Control panel type TS or CC + RB is required for Tylö SK, SD and SDK heaters. The Tylö SE sauna heater must be combined with separate control panel CC.

TS-type control panels

TS panels are thermally operated and have a patented divided output. They can either be surface-mounted or recessed for a flush fit (fig. 11). It is essential to fit insulation behind control panels recessed into the wall. The standard length of the capillary tube is 1850 mm, but a 5000 mm capillary tube is also available.

Installing a sensor for a TS control panel (fig. 12). **A =** capillary tube. **B =** sensor holder. **C =** plastic holder for capillary tube. **D =** sensor that is installed 1500 mm above floor level (fig. 11, not above the sauna heater).

Extra equipment for the TS control panel.

Locking cover in transparent plastic to fit over the control panel. Available in designs to prevent unauthorised interference with time and temperature settings, or temperature only.

Figs. 22–26, 32, 33, 38 Wiring diagrams.

(With sauna heater SK, SD, SDK and control panel TS).

1 = sauna heater. **2 =** control panel. **3 =** relay box.

Check the heater's type identification plate to ensure that the heater is connected to the right voltage. **Don't forget – The installation must be earthed!**

Remote control operation.

TS control panels use contactors for remote control operation.

CC control panels.

Instructions: included with the control panel.

Can be installed at any distance from the sauna room.

CC panels are electronically operated and are available in the following models:

CC 10-3/CC MPE. Manual and automatic on/off. A maximum of three hours' running time, 10 hours' pre-set time.

CC 10-10. Manual and automatic on/off. A maximum of 10 hours' running time, 10 hours' pre-set time.

CC 50-3. Manual and automatic on/off. A maximum of three hours' running time, 10 hours' pre-set time.

CC 50-12. Manual and automatic on/off. A maximum of 12 hours' running time, 10 hours' pre-set time.

CC 100-3. Manual and automatic on/off. A maximum of three hours' running time, 24 hours' pre-set time.

CC 100-12. Manual and automatic on/off. A maximum of 12 hours' running time, 24 hours' pre-set time.

CC 100-0. Built-in weekly timer. A maximum of 12 hours' continuous running time.

Placement of the thermistor (sensor).

1500 mm above floor level (not above the sauna heater).

The thermistor wire can be lengthened outside of the sauna with a partially enclosed low-voltage cable (2-core).

The thermometer in the sauna should be placed at a height so that the temperature corresponds exactly to the numbers displayed on the CC 50/CC 100.

Note: If necessary seal the hole in the wall behind the thermistor.

Relay box (RB).

(No relay box is used for SE and MPE heaters).

Installed outside the sauna at any distance from it. The relay box may not be placed closer than one metre from the CC 10/ CC 50/ CC 100.

Partially enclosed low-voltage cable (6-core).

The control cable between the CC 10/ CC 50/ CC 100 and the relay box or SE/MPE heater must be a partially enclosed low-voltage cable (6-core). Connect the shielding cable to plinth 12 in the relay box or SE/MPE heater.

Lighting.

Connect the lighting according to the wiring diagram.

Remote control operation.

CC control panels are already prepared for remote-control operation from one or more locations.

Option: external on/off-switch (instantaneous).

Can be placed at any distance from the sauna. Connected with a low-voltage cable to the CC 10/ CC 50/ CC 100 – see the wiring diagram. If there are several external on/off switches, they should be parallel-connected.

Connection to a central computer.

The control panel can also be connected to a central computer, which gives a brief impulse (closure) between plinths 19 and 20 in the CC 10/ CC 50/ CC 100. The maximum permitted connection time for the sauna is 12 hours.

An instruction guide is included with the control panel.

Figs. 27-30, 34-36, 39-41 Wiring diagrams.

(With sauna heater SK, SD, SDK, SE, MPE and control panel CC).

1 = sauna heater. **2 =** thermistor (sensor). **3 =** control panel.
4 = external on/off switch (if any). **5 =** relay box.

Check the heater's type identification plate to ensure that the heater is connected to the right voltage. **Don't forget – The installation must be earthed!**

Unusual voltages or number of phases.

Before connecting the heater to a different voltage or number of phases than those described in the wiring diagram, contact Tylö Customer Service.

BUILDING INSTRUCTIONS

The importance of correct sauna ventilation.

Incorrect sauna ventilation can result in hot floors and benches, scorched walls and ceilings (the temperature limit control is triggered)! So we do urge you to follow our instructions for sauna ventilation carefully.

Adjust the air outlet to evacuate 6–8 cu.m. of air per person, per hour, when the sauna is in operation.

Mechanical sauna ventilation is not to be recommended, as the forced air supply can cause a fire hazard through the wooden panelling drying out.

Fig. 13. Sauna heater and door on the same wall.

The "air circulation" created by the door should work together with the hot air generated by the heater. To facilitate this, the heater should be placed on the same wall as the door (If exceptional circumstances require the heater to be fitted to a side wall, make sure it is located in close proximity to the wall with the door).

Fig. 14. Inlet vent always directly below the heater.

The inlet vent should be driven straight through the wall directly below the centre of the heater. The cross-section of the vent for a family sauna is approx. 125 Sq.cm., for larger saunas approx. 300 sq.cm.

Fig. 15. The outlet vent should never discharge directly into the open air.

Position the air inlet and outlet vents as far away from one another as possible (diagonally opposite). The outlet vent should be located high on a wall or in the ceiling, and should have the same cross-section area as the inlet vent.

Spent air should always be led back into the same room from which it is drawn into the sauna – it must never be discharged directly into the open air. In this way, the air flowing from the sauna is continually being replenished in the room outside. This thermal ventilation method always works, no matter whether the pressure in adjacent rooms is negative or positive.

If there is a gap above the sauna ceiling, do not seal it. To ventilate a cavity above the sauna, drill or cut at least one ventilation hole into the cavity through the wall on which the sauna door is located.

Alt. A: Outlet vent through the sauna wall (seen from above). The vent is placed high up, near the ceiling.

Alt. B: Outlet vent through the cavity above the sauna ceiling (seen from the side).

Alt. C: Outlet vent through a drum under the ceiling in the sauna (seen from the side). The outlet duct should be placed at an angle between the ceiling and the wall. The drum can be built of wooden panelling and have the same area as the outlet vent.

Fig. 16. Recommendations for sauna construction:

A. Floor frame, corner posts, studs, ceiling frame.
B. Battens, rafters, vents.
C. 50 mm mineral wool as heat insulation, approx. 20 mm air gap between insulation and outer wall.
D. 12 mm wooden panel in walls and ceilings. There should always be at least 50 mm of insulation behind the wooden panel; no other material, such as particle board or plaster, may be used.
E. Bonded, non-slip plastic floor-covering, extending approx. 50 mm up the walls behind the wooden panelling.
F. Inlet vents should always be fully open. May be fitted with a shuttered vent on the outside.
G. Outlet vent, can be fitted with a sliding hatch to adjust through-flow.
H. Benches of at least 22 mm thick knot-free pine (alternatively aspen, lime or obeche).
I. Drainage channel (recommended in public saunas). Never place a drainage channel or drain under the sauna heater.

Fig. 17. Heater guard.

The stones and the top of the sauna heater get very hot! In order to reduce the risk of accidental contact, Tylö always recommend that a heater guard be fixed as shown in the sketches.

Some words of advice:

- There should never be a drain in a sauna. However, all public saunas should have a drainage channel (I, fig. 16) connected to a drain out-side the sauna (no drainage channel is needed in a private sauna).
- If the sauna has a window in the door or wall, treat the lower moulding with boat varnish and seal the joint between the glass and the moulding with a water-resistant silicone sealant. This prevents any condensation on the glass from seeping into the wood.
- Varnish the threshold and door handles a few times with boat varnish to maintain the finish and simplify cleaning the sauna. Benches, decorative edging and back supports should be oiled on both sides with Tylö sauna oil (this is particularly important in the Tylarium). **Note:** All other wood in the sauna should be untreated.
- Install floor decking only if the floor is slippery. Floor decking is im-practical and prolongs the drying time for any water spilt on the floor.
- Treat the bucket and ladle with boat varnish, or oil them with Tylö sauna oil. The bucket will remain watertight and the wood will be beautifully preserved. Never leave the wooden bucket in the sauna after a sauna bath.

- Before you enjoy your first sauna bath, heat the sauna room up to 90°C and leave the heater to run for about 1 hour. This will rid the room of that "new" smell.
- Clean your sauna regularly. Scrub the benches and floor with soft soap. It is a mild, gentle detergent and leaves a pleasant fragrance.

General Information

Fig. 18. Filling the stone compartment.

Only use stones of the dolerite type (Tylö sauna stones), as "ordinary" stones can damage the unit. Fill the stone compartment around the elements from bottom to top, stacking the stones approx. 50 mm above the front edge at the top of the unit. Do not press the stones into place.

Fig. 19.

Never place stones above the side air chambers. This prevents air circulation, the unit becomes overheated and the temperature limit control is triggered.

Check the stone compartment at least once a year.

This is especially important for public saunas and saunas in frequent use. Remove all stones from the compartment. Clean any small stones, grit, gravel and chalky deposits from the bottom of the stone compartment. Use only stones which are whole and intact, replacing them when necessary with new dolerite stones.

Temperature limit control.

Tylö sauna heaters have a temperature limit control built into the terminal box on the heater. This is activated automatically if there is any risk of overheating. More often than not, the cut-off is triggered because of incorrect sauna ventilation or an incorrectly located sauna heater. Call an expert to reset the temperature limit control.

Fig. 20. Built-in humidifier (6,6 – 8 kW).

Fill the built-in reservoir with water before turning on the sauna, and you will have a pleasantly humid sauna right from the start, which accelerates and stimulates perspiration. You can also add a few drops of sauna fragrance to the water in the humidifier.

Sprinkling water on the stones

Must always be done with a ladle onto the stones, never with a hose or bucket. **Note:** The stones must be hot.

OPERATING INSTRUCTIONS Sport and TS

Temperature setting.

The Roman numerals indicate a rising temperature scale. Experiment to find the temperature that suits you best. Begin for example by turning the thermostat dial to position IV. If you later find that you would prefer a higher or lower temperature, adjust the dial up or down until you find the ideal bathing temperature for you (usually 70–90°C). Once you have found the right temperature, you can leave the dial on this setting.

Timer settings with control panels TS 16-3(B), TS 30-03 and sauna heater Sport.

The first figures, 1–2–3, indicate the length of time the sauna will operate. The following 9 figures are used to pre-set start-up times.

For immediate operation: First turn the dial past the first figure 3 and then back again to the figure corresponding to the length of time you wish the heater to run for (1, 2 or 3 hours). The timer turns the heater off automatically when the 0 position is reached.

For automatic operation: Turn the dial to the figure 9 and then back to the desired pre-set time (in other words, the number of hours before the heater automatically switches itself on). The timer turns off automatically when the 0 position is reached.

You may turn the dial forwards or backwards whenever you wish, for example, to switch off the sauna manually (turn to 0) or to change a setting you have already made.

Timer settings with control panels TS 30-012 and TS 58 -12 RB.

The figures 1–12 on the timer indicate the operating time. The heater remains in operation for the number of hours the switch is set to, and automatically switches itself off when the 0 position is reached.

You may change the time setting whenever you wish and also switch off the sauna by turning the dial to 0.

INSTRUCTIONS FOR USE CC MPE

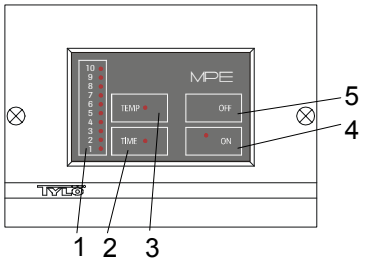

Functions.

1 = setting scale. **2 =** time settings. **3 =** temperature settings. **4 =** on. **5 =** off.

Temperature setting.

(The heater must be switched on)

Press TEMP – the previous temperature setting is displayed.

The numbers indicate a rising temperature scale. Experiment to find the temperature that suits you best. Begin for example by turning the thermostat dial to position 4. If you later find that you would prefer a higher or lower temperature, adjust the dial up or down until you find the ideal bathing temperature for you (usually 70-90°C (158-194°F) for traditional dry and wet sauna baths, 40-45°C (104-113°F) for steam saunas and herb saunas).

Manual on/off.

Press ON to switch the facility on. **Press OFF** to switch it off. (the LED goes out).

A memory function automatically sets the previous temperature.

Press TEMP – to change the pre-set temperature.

The built-in timer automatically switches the sauna heater/steam generator off after 3 hours. If you want to switch it off earlier than that, press OFF. To extend the sauna time, press ON.

Timer settings.

(The heater must be switched off)

The numbers in this case represent the timer times (= the number of hours until the heater automatically switches on). To set the timer:

Press TIME – use the arrow keys to select the desired pre-set time, 1–10 hours.

Press ON – the timer is activated and the time indicator blinks during the pre-set time period. Once the heater switches itself on, it remains on for 3 hours, after which it automatically switches itself off. If you want to switch it off earlier than that, just press OFF. To extend your sauna time, press ON.

Main power switch.

On the underside of the heater is a main switch. It is only necessary to use this switch if the equipment will lie idle for a fairly long period of time.

Settings stored in the CC control panel's memory function are erased whenever there is an interruption in the power supply.

HOW TO GET THE MOST OUT OF YOUR SAUNA

- Always shower before going into the sauna.
- Take a towel in with you to sit on. Stay inside the sauna only as long as it feels pleasant. Go out now and then to cool off and freshen up with a quick shower.
- Show consideration for other bathers. Don't set the temperature higher than is pleasant for all those using the sauna.
- Young children love saunas. Let them splash about in a tub of water on the floor or the lower benches where it is somewhat cooler. But remember to keep an eye on them at all times.
- Round off your sauna with a long, cool shower.
- Never get dressed right after your sauna. This will only cause you to perspire. Relax, treat yourself to a cold drink and enjoy a sensation of true well-being. Don't get dressed until your body has cooled down and your pores have closed once again.

You can enjoy traditional dry and wet saunas with provide continuous water sprinkling are not permissible.

You can enjoy traditional dry and wet saunas with all Tylö heaters.

Dry and wet saunas are bathing forms whose history is shrouded in the mists of time. These hot baths are best enjoyed at temperatures between 70ºC and 90ºC.

In **dry saunas**, where the stones are not sprinkled with water, the relative humidity (RH) is as low as 5–10%.

In **wet saunas**, when water is ladled on the hot stones from time to time, the relative humidity rises steeply to 10–25%, and you can feel how the quivering waves of heat massage their way into your skin. A few drops of Tylö Sauna Fragrance added to the water poured over the stones give a pleasantly invigorating sensation, clearing nasal cavities and helping you breathe more easily. A great way to round off any sauna is to experience the pleasant tingling sensation when you pour a little extra water over the stones. Wet saunas are considered by most people to be the traditional way to enjoy a sauna, and they are the most popular too.

Important! Use ordinary drinking water. Salt-water, swimming pool or spa water will damage the heating elements. Never hose down the heater. Water sprinkling must always be done with a ladle onte the stones. Devices that provide continuous water sprinkling are not permissible.

TYLÖ AB, Svarvaregatan 6, S-30250 Halmstad, Sweden.
Tel 035-299 00 00, Fax 035-299 01 98. E-mail: info@tylo.se,
Internet: www.tylo.com

© This publication many not be reproduced, in part or in whole, without the written permission of Tylö.
Tylö reserves the right to make changes in materials, construction and design.

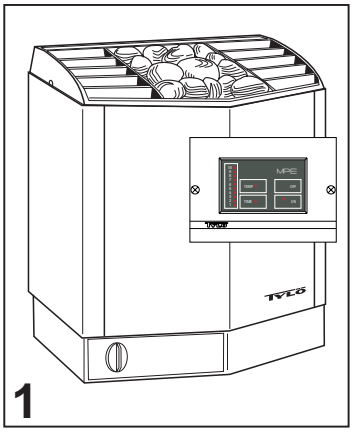
1

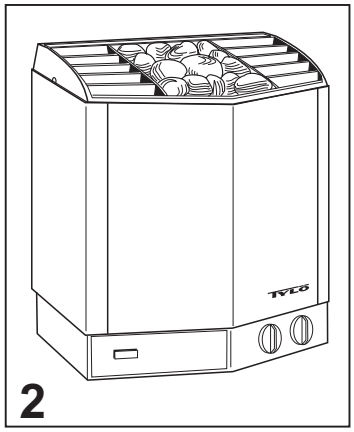
2

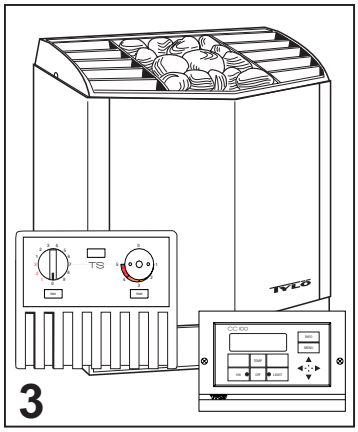
3

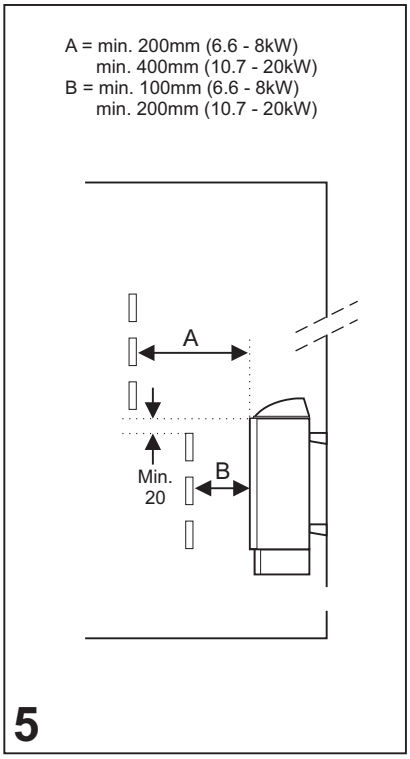
A = min. 200mm (6.6 - 8kW)
min. 400mm (10.7 - 20kW)
B = min. 100mm (6.6 - 8kW)
min. 200mm (10.7 - 20kW)
A
Min.
20
B
5

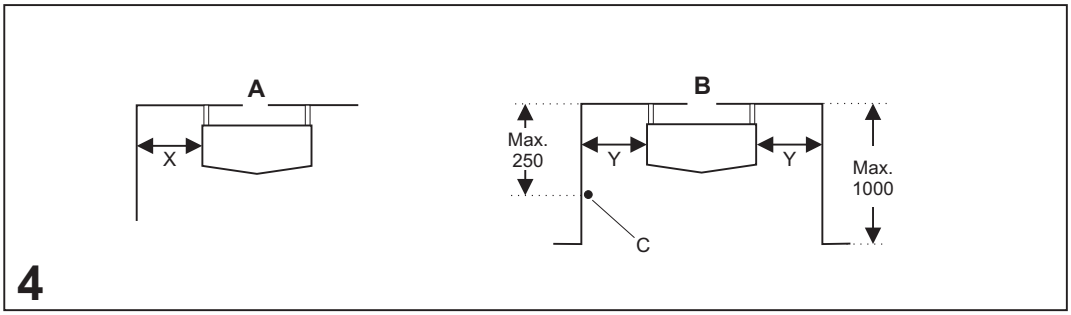
A
X
B
Max.
250
Y
Y
Max.
1000
C
4

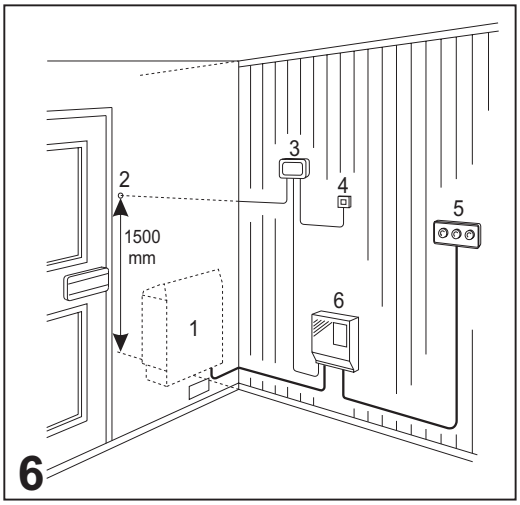
2
3
4
5
1500
mm
1
6
6

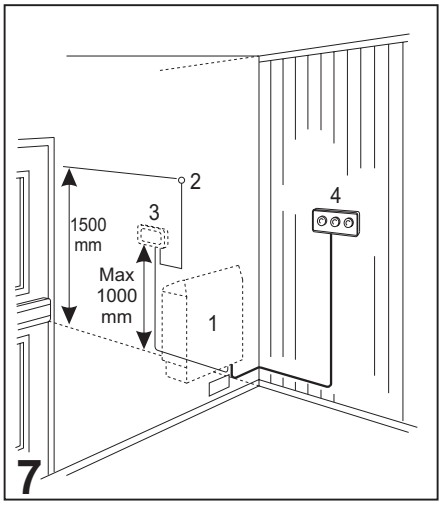
2
1500
mm
3
Max
1000
mm
4
1
7

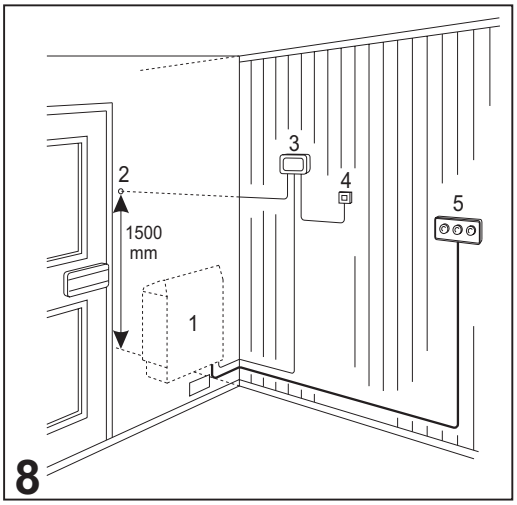
3
2
4
5
1500
mm
1
8

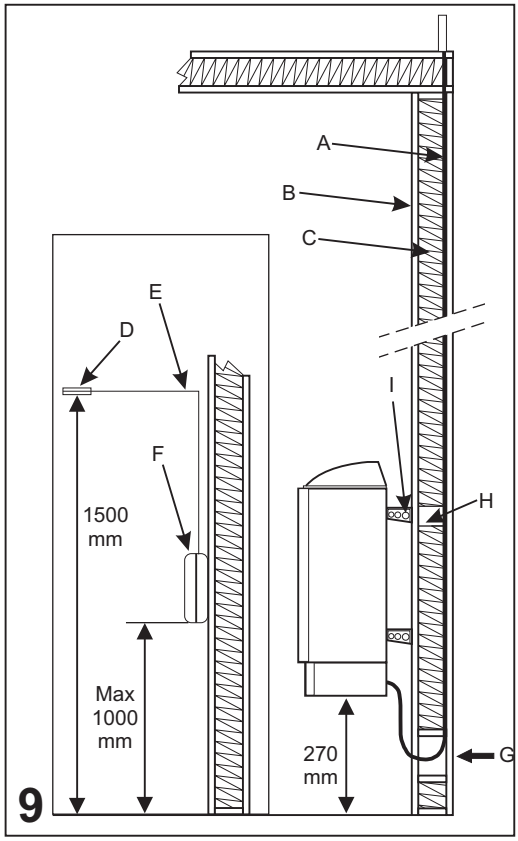
A
B
C
E
D
I
F
H
1500
mm
Max
1000
mm
270
mm
G
9

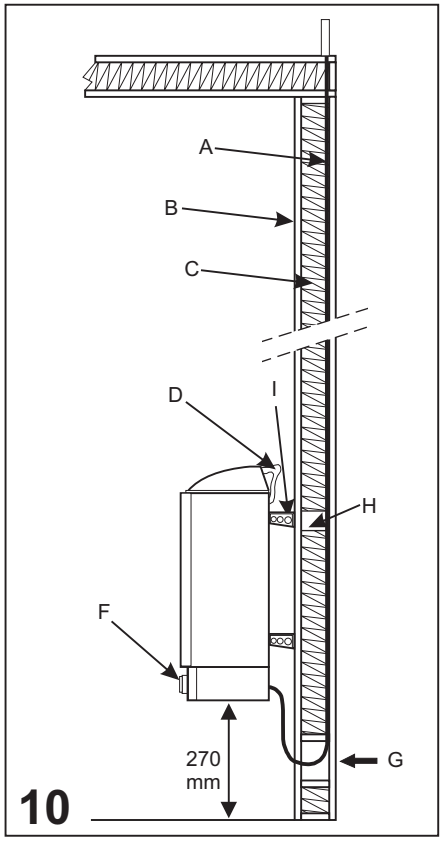
A
B
C
D
I
H
F
270
mm
G
10

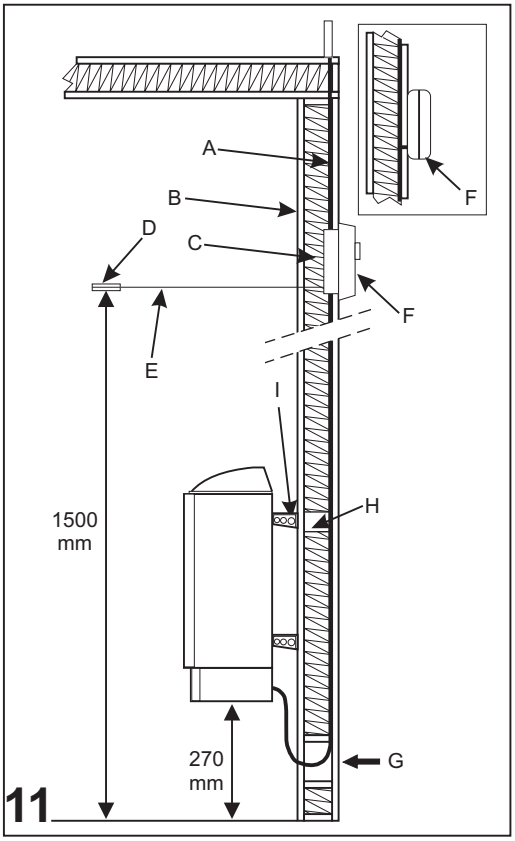
A
B
F
D
C
F
E
I
H
1500
mm
270
mm
G
11

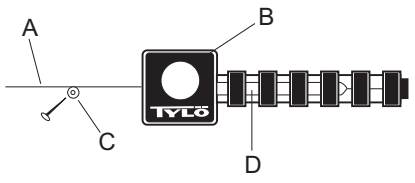
A
B
C
D
TYLÖ

12

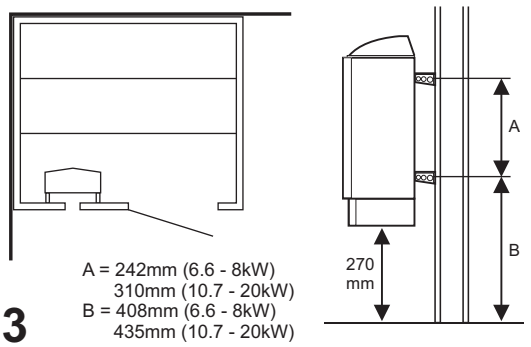
A
B
270
mm
A = 242mm (6.6 - 8kW)
310mm (10.7 - 20kW)
B = 408mm (6.6 - 8kW)
435mm (10.7 - 20kW)

13

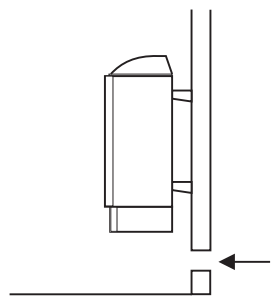

14

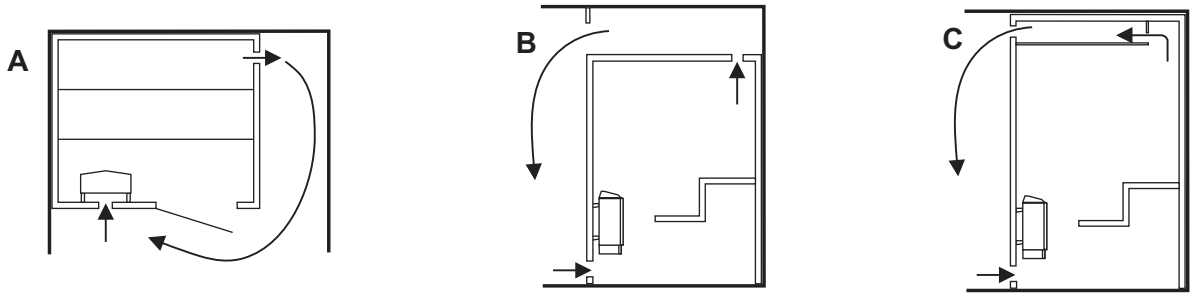
A
B
C

15

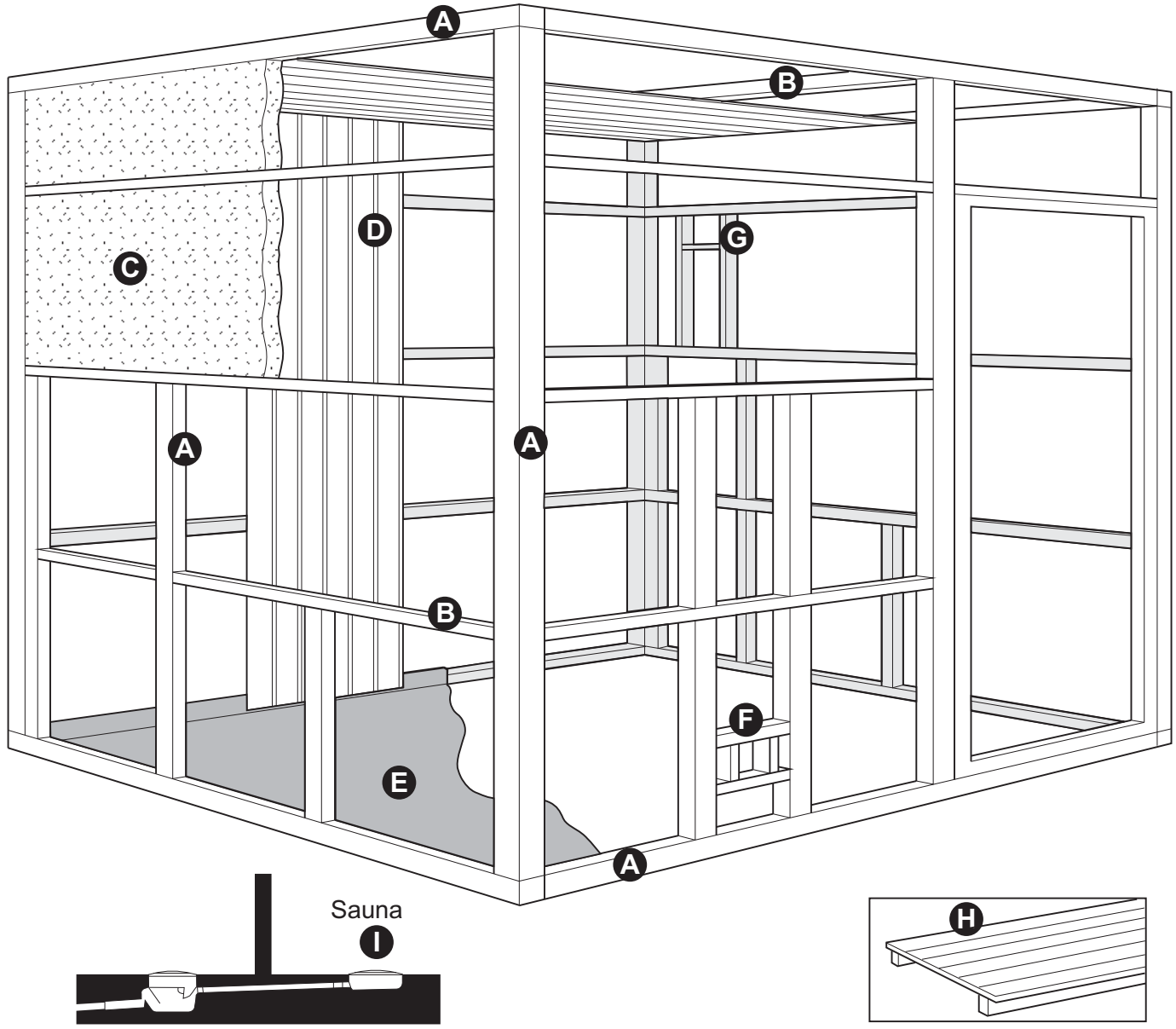
A
B
C
D
G
A
A
B
F
E
A
Sauna
I
H

16

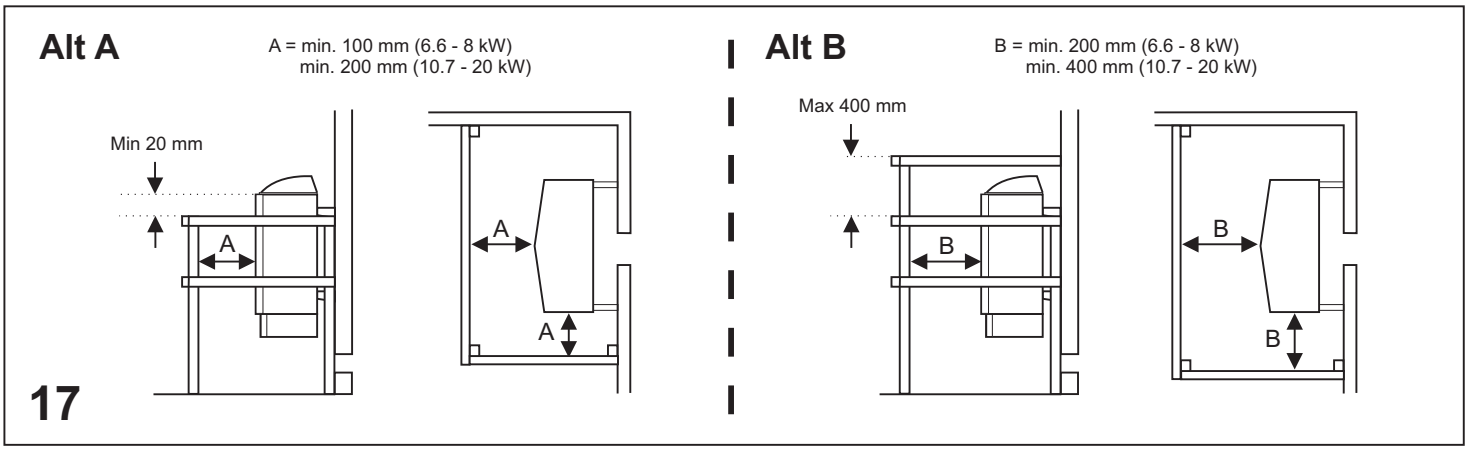

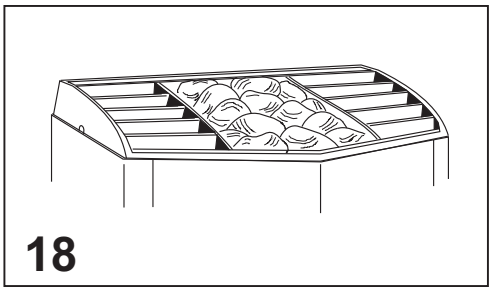

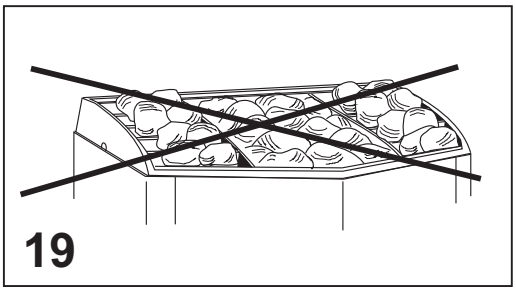

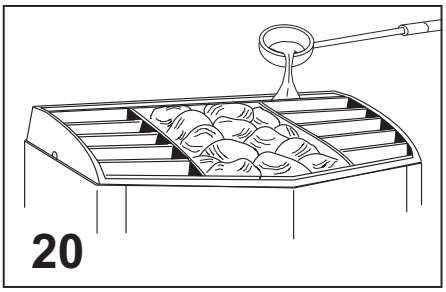

400 - 415 - 440 V 3~

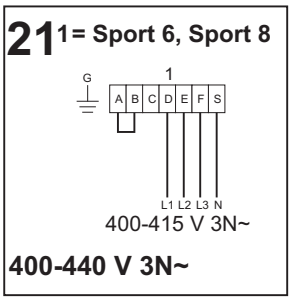

WARNING! THIS APPLIANCE MUST BE EARTHED!

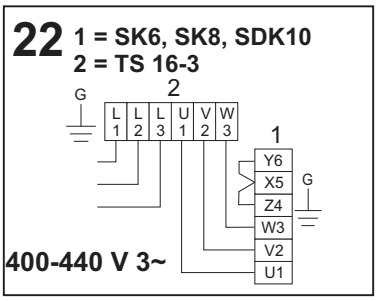

WARNING! THIS APPLIANCE MUST BE EARTHED!

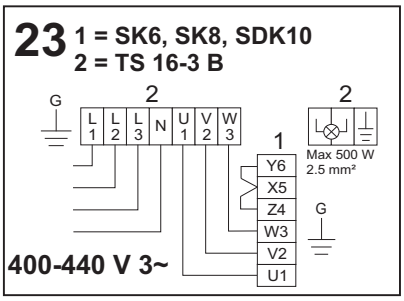

WARNING! THIS APPLIANCE MUST BE EARTHED!

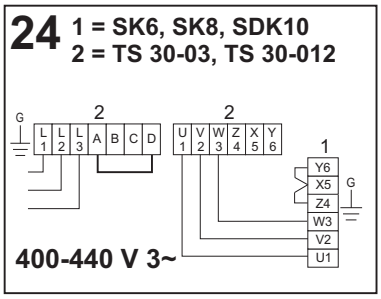

WARNING! THIS APPLIANCE MUST BE EARTHED!

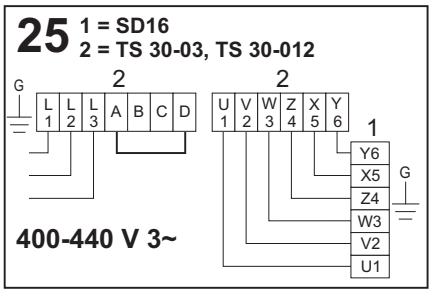

WARNING! THIS APPLIANCE MUST BE EARTHED!

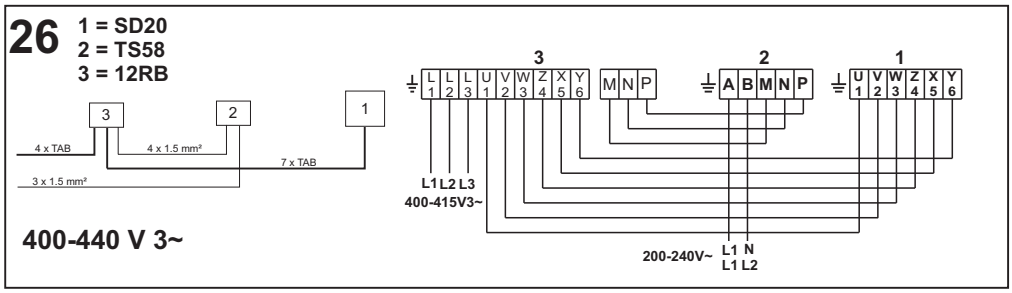

WARNING! THIS APPLIANCE MUST BE EARTHED!

400 - 415 - 440 V 3N~

27

1 = SK6, SK8, SDK10
2 = thermistor (sensor)
3 = CC10, CC50, CC100
4 = external switch
5 = RB 30

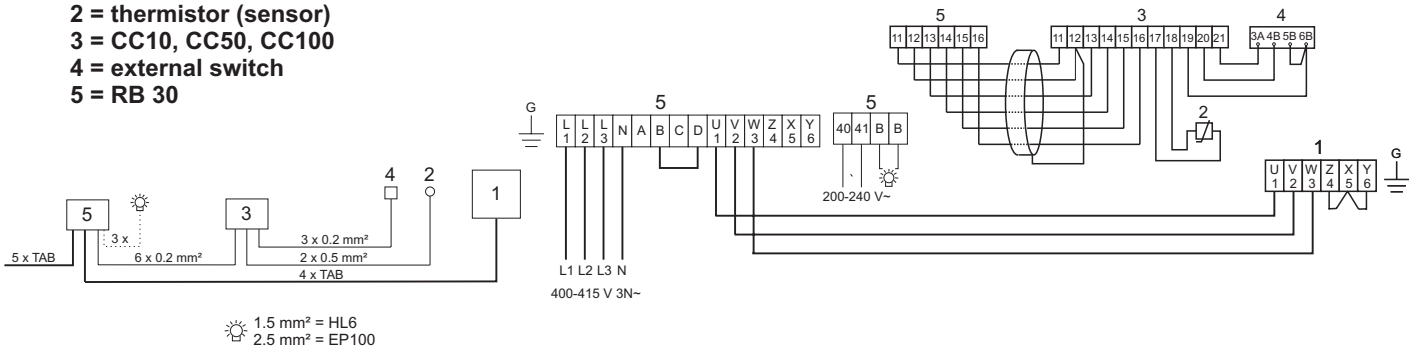

WARNING! THIS APPLIANCE MUST BE EARTHED!

28

1 = SE 6, SE 8
2 = thermistor (sensor)
3 = CC10, CC50, CC100
4 = external switch

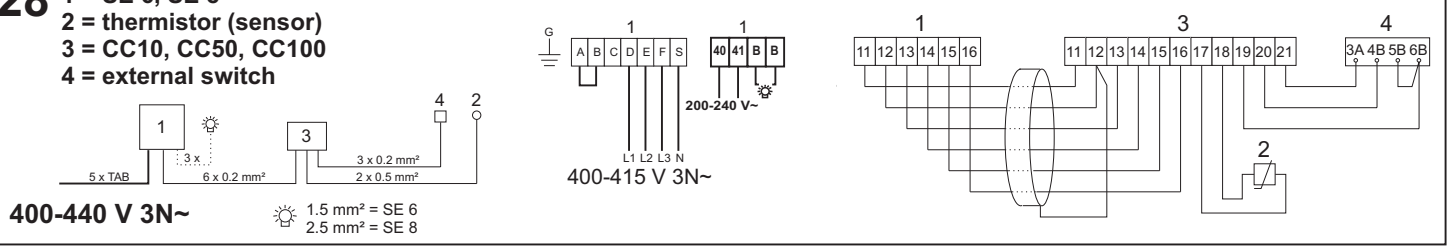

WARNING! THIS APPLIANCE MUST BE EARTHED!

29

1 = MPE
2 = thermistor (sensor)
3 = CC MPE

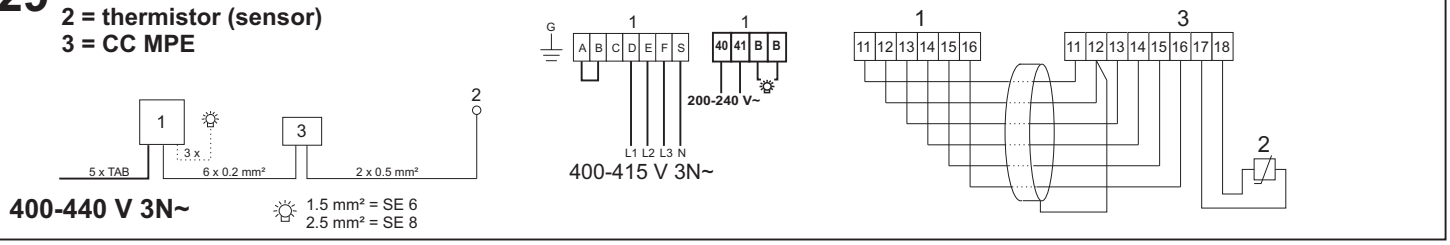

WARNING! THIS APPLIANCE MUST BE EARTHED!

30

1 = SD16, SD20
2 = therm. (sensor)
3 = CC10, CC50, CC100
4 = ext. switch
5 = RB 30, RB 60

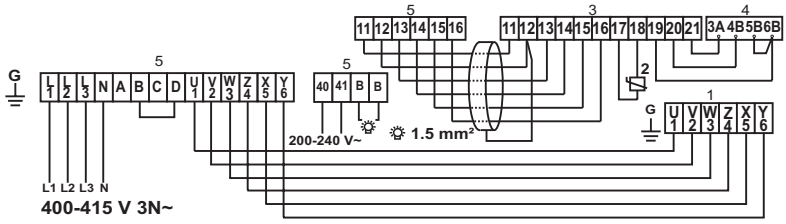

WARNING! THIS APPLIANCE MUST BE EARTHED!

200 - 208 - 230 - 240 V 3~

31 1 = Sport 6, Sport 8

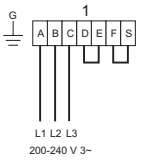

200-240 V 3~

WARNING! THIS APPLIANCE MUST BE EARTHED!

32 1 = SK6, SK8, SDK10
2 = TS 30-03, TS 30-012

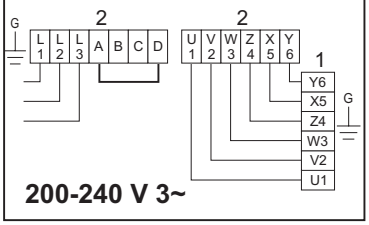

200-240 V 3~

WARNING! THIS APPLIANCE MUST BE EARTHED!

33 1 = SD16, SD20
2 = TS 58
3 = 12 RB

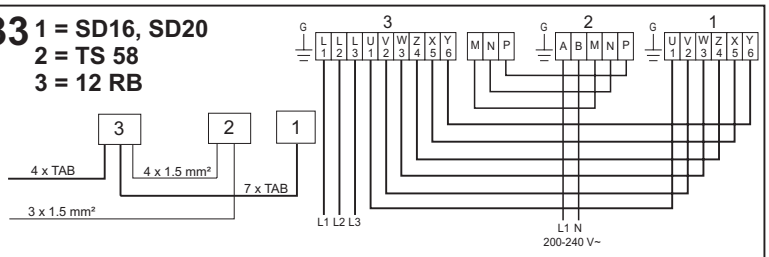

200-240 V 3~

WARNING! THIS APPLIANCE MUST BE EARTHED!

34 1 = SK6, SK8, SDK10, SD16, SD20
2 = thermistor (sensor)
3 = CC10, CC50, CC100
4 = external switch
5 = RB 30, RB 60

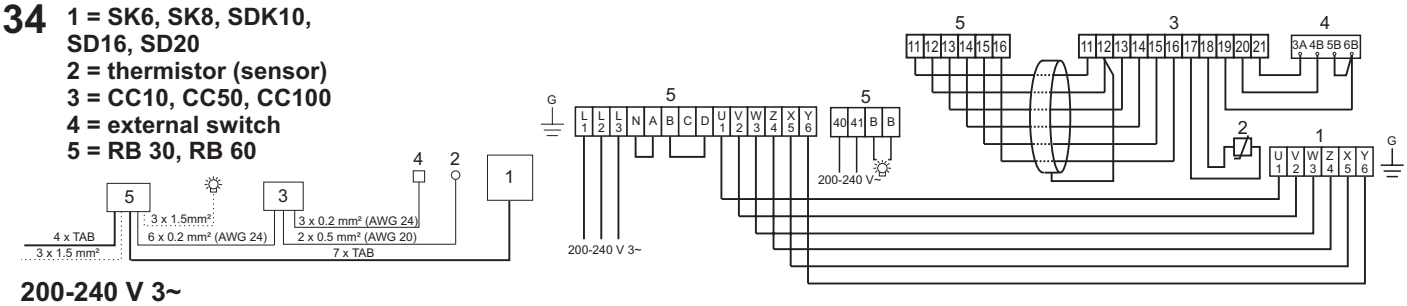

200-240 V 3~

WARNING! THIS APPLIANCE MUST BE EARTHED!

35 1 = SE 6, SE 8
2 = thermistor (sensor)
3 = CC10, CC50, CC100
4 = external switch

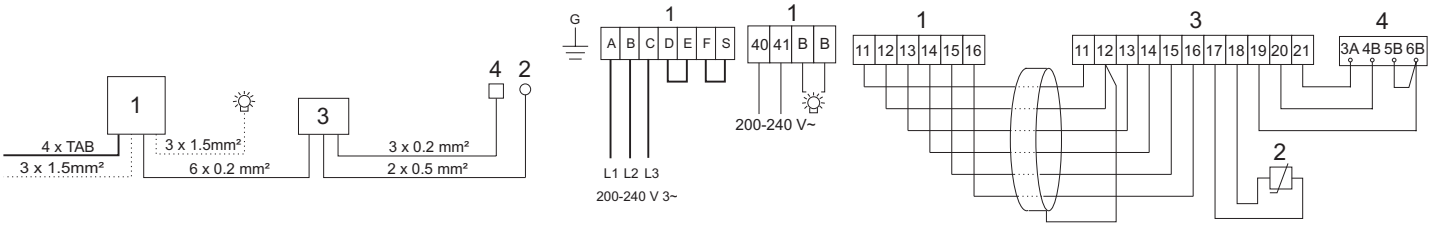

200-240 V 3~

WARNING! THIS APPLIANCE MUST BE EARTHED!

36 1 = MPE
2 = thermistor (sensor)
3 = CC MPE

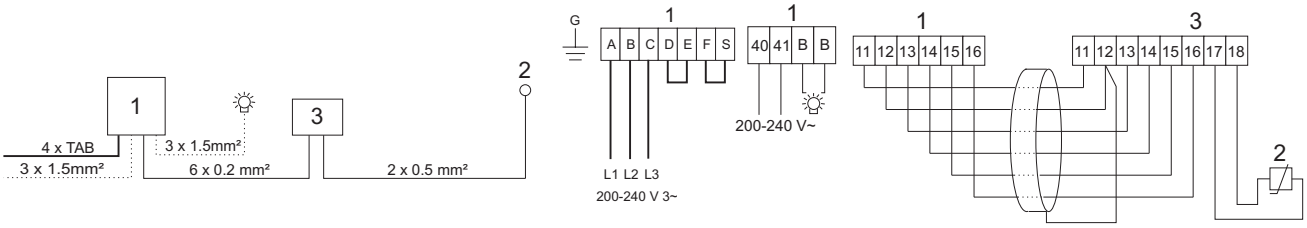

200-240 V 3~

WARNING! THIS APPLIANCE MUST BE EARTHED!

200 - 208 - 230 - 240 V~

37
1 = Sport 6, Sport8

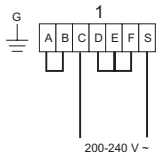

200-240 V~

WARNING! THIS APPLIANCE MUST BE EARTHED!

38
1 =SK6, SK8, SDK10
2 = TS 30-03, TS 30-012

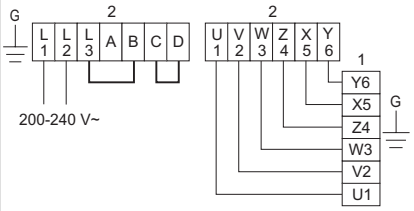

200-240 V~

WARNING! THIS APPLIANCE MUST BE EARTHED!

39
1 = SK6, SK8, SDK10
2 = thermistor (sensor)
3 = CC10, CC50, CC100
4 = external switch
6 = RB 30

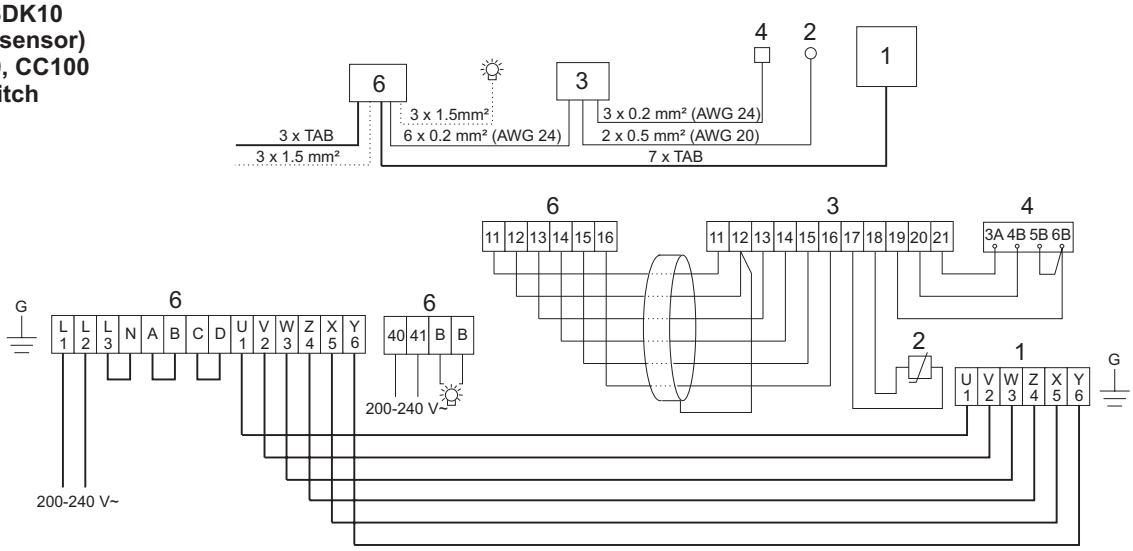

200-240 V~

WARNING! THIS APPLIANCE MUST BE EARTHED!

40
1 = SE 6, SE 8
2 = thermistor (sensor)
3 = CC10, CC50, CC100
4 = external switch

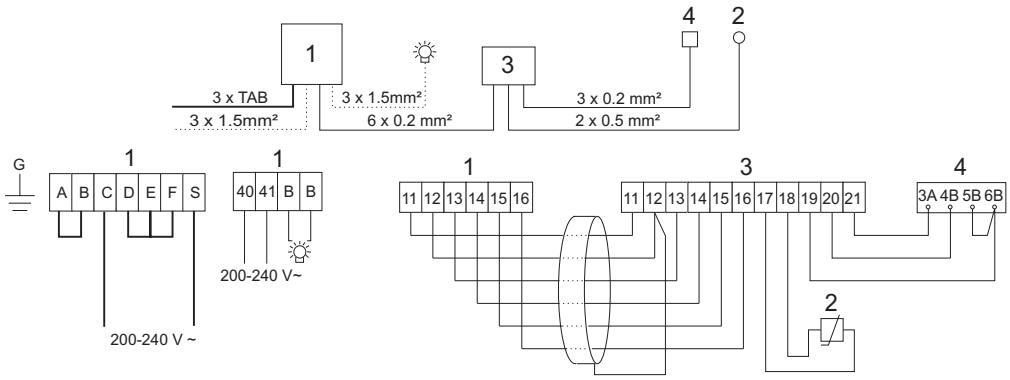

200-240 V~

WARNING! THIS APPLIANCE MUST BE EARTHED!

41
1 = MPE
2 = thermistor (sensor)
3 = CC MPE

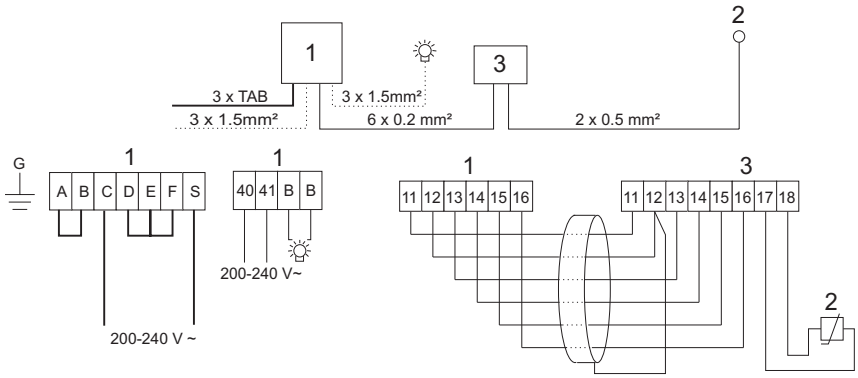

200-240 V~

WARNING! THIS APPLIANCE MUST BE EARTHED!