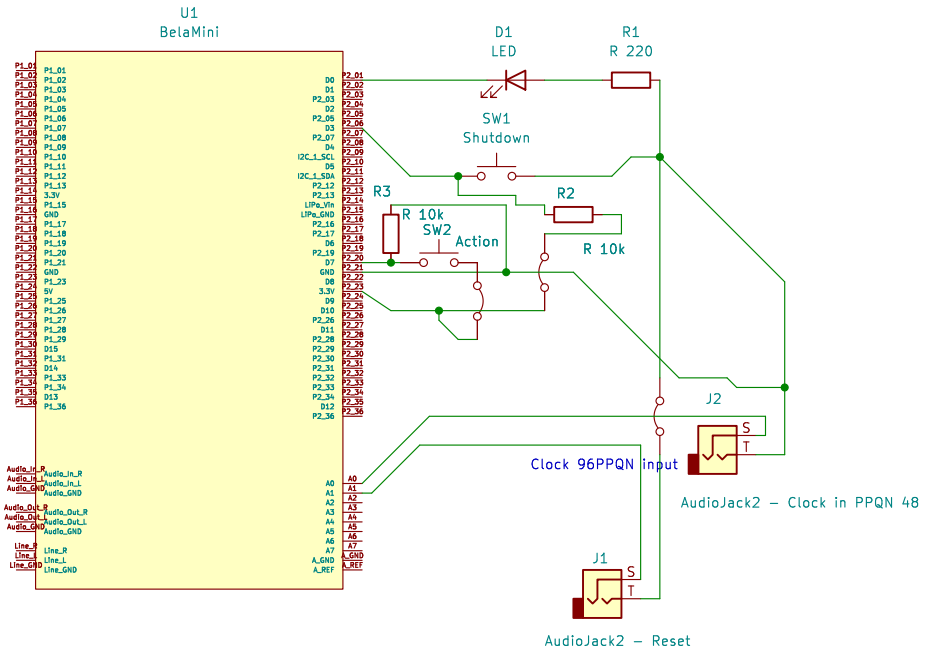

Sheet: /
File: bela.ClockReader.kicad_sch

Title: Bela glitch

Size: A4	Date: 20.10.2024	**Rev:**
KiCad E.D.A. 8.0.5		Id: 1/1