Specification BMEcat® 2005.2

Authors:

Volker Schmitz, University of Duisburg-Essen
Jörg Leukel, University of Duisburg-Essen
Oliver Kelkar, Fraunhofer IAO

Changes in BMEcat® 2005.1

Prof. Dr.-Ing. Frank-Dieter Dorloff, University of Duisburg-Essen
Veit Jahns, University of Duisburg-Essen

Changes in BMEcat® 2005.2

Prof. Dr.-Ing. Frank-Dieter Dorloff, Universität Duisburg-Essen
Dr. Veit Jahns, Universität Duisburg-Essen

Contact references:

Prof. Dr.-Ing. Frank-Dieter Dorloff	Lars-Thorsten Heine
University of Duisburg-Essen	Bundesverband Materialwirtschaft, Einkauf und Logistik e. V.
https://www.bli.uni-due.de/	**https://www.bme.de**

Contact via e-mail: **authors@bmecat.org**

Copyright © 2022 BME e.V. - BMEcat® Version 2005.2

Copyright © 2010-2021 BME e.V. - BMEcat® Version 2005.1

Copyright © 2005-2009 BME e.V. - BMEcat® Version 2005

Copyright © 1998–2004 Fraunhofer IAO, Stuttgart; Universität Essen BLI - BMEcat® Version 1.2

Legal notices

The "Bundesverband Materialwirtschaft, Einkauf und Logistik e.V. (BME)" has the exclusive, temporal, textual and spatial unrestricted, non-commercial and commercial rights of usage and exploitation of the eBusiness standard BMEcat® and of all work results, program versions and documentations associated with it.

The BME hereby grants you the durable, not exclusive, free of charge right to use the BMEcat® specification. Using, copying, publishing and distributing the same considering the copyright indicated in the specification.

The BME hereby grants you, in accordance with protective rights on copyright a licence free of charge for the implementation of computer programs according to these guidelines.

The BME hereby grants you, in accordance with protective rights on copyright a licence free of charge for using the BMEcat®-Tags and scheme guidelines contained in the specification for the implemantation of computer programs according to these guidelines.

BMEcat® is a registered trademark of the BME e.V.. Other names and terms appearing in this specification are possibly registered trademarks of the respective companies.

Acknowledgement BMEcat® 2005

Since the publication of BMEcat® 1.2 in March 2001, the BMEcat® authors have received numerous suggestions for changes, expansions and improvements. These have been taken into account concerning the planning and development of BMEcat® 2005. At this point, the BMEcat® authors would like to take the opportunity to express their gratitude to all the persons who have contributed to the improvement of performance and quality by means of advices, suggestions and active assistance. In particular our gratitude goes to the participants of the BMEcat® development workshops and the members of the BMEcat® change committee. Among others, we would like to mention the following persons: (The order of appearance is merely determined by the alphabetical order of the names of the companies by which the persons were employed at the time of their assistance.):

- Mr. Martin Kobel, Bär Büro- und Betriebseinrichtung GmbH & Co.KG
- Mr. Thomas Trautenmüller, BMEnet GmbH
- Mr. Hans-Joachim Detering, Bundesverband Materialwirtschaft, Einkauf und Logistik e.V.
- Mr. Manfred Nagel, Bundesverband Bausoftware e.V.
- Mr. Jörg Schierbaum, cc-chemplorer Content GmbH
- Mr. Michael Münnich, cc-hubwoo Deutschland
- Mr. Daniel Wolf, cc-hubwoo Deutschland
- Mr. Sven Wachtel, Corporate Express Deutschland GmbH
- Mr. Benno Hässer, Deutsche Telekom AG
- Mr. Andreas Weiland, Deutsche Telekom AG
- Mr. Björn Kirsch, Dresdner Bank AG
- Mr. Sascha Schröder, e-pro solutions GmbH
- Mr. Jürgen Wäsch, e-pro solutions GmbH
- Mr. Michael Irmen, Einkaufsbüro Deutscher Eisenhändler GmbH
- Mr. Martin Reinke, Einkaufsbüro Deutscher Eisenhändler GmbH
- Mr. Jürgen Friedrich, Friedrich Software
- Mr. Volker Hahn, Heiler Software AG
- Mr. Manfred Paix, Heiler Software AG
- Mr. Bernhard Rath, Ingenieurbüro Bernhard Rath
- Mr. Marcel Luis, jCatalog Software AG
- Mr. Gerold Carl, Lufthansa AG
- Mr. Thomas List, Oracle Deutschland GmbH
- Mr. Rolf Danker, POET Software GmbH
- Mr. Arno Schäfer, POET Software GmbH
- Mr. Ralph Landwehr, D. Schuricht GmbH & Co. KG
- Mr. Ludger Kampen, Siemens AG
- Mr. Franz Ernst, Sonepar Deutschland GmbH
- Mr. Thomas Fellmann, T-Systems International GmbH
- Mr. Veit Jahns, Universität Duisburg-Essen
- Mr. Stefan Hellwig-Kubitzky, Universität Duisburg-Essen
- Mr. Stefan Froehlich, Vemap.com
- Mr. Thomas Wahle, WISCORE GmbH
- Ms. Kerstin Wehner, ZF Sachs AG

Acknowledgement BMEcat 2005.2

BMEcat® 2005.2 was developed in close cooperation with the ECLASS e. V. In particular, we would like to thank the following person for their invaluabe input and remarks:

- Dr. Christian Block, ECLASS e. V.
- Stefan Mühlens, ECLASS e. V.
- Matthias Redecker, ECLASS e. V.
- Volker Römisch, ECLASS e. V.
- Frank Scherenschlich, ECLASS e. V.
- Josef Schmelter, ECLASS e. V.

Table of Contents

1 Introduction . . . 10
1.1 Overview . . . 10
1.2 Application of XML . . . 10
1.3 Supplementary activities and standards . . . 10
1.4 Implementation support . . . 11
1.5 Website www.bmecat.org . . . 11
2 Specification . . . 11
2.1 Specification structure . . . 11
2.2 Description of elements . . . 12
2.3 Mandatory and optional fields . . . 13
2.4 Data types . . . 15
2.5 Character codification in XML . . . 15
2.6 Version history . . . 15
3 Catalog data exchange with BMEcat® . . . 15
3.1 Transactions . . . 16
3.2 Data areas . . . 17
3.2.1 Catalog header . . . 17
3.2.2 Product data area . . . 17
3.2.3 Classification systems, catalog group systems, and feature systems . . . 17
3.2.4 Product-overlapping data areas . . . 18
3.3 Extensions in BMEcat® 2005 . . . 18
3.3.1 Integrated Procurement Point (IPP) . . . 18
3.3.2 Formulas . . . 19
3.3.3 Product configuration . . . 19
3.3.4 Logistics data . . . 19
3.3.5 Multilingual catalog documents . . . 19
3.3.6 Multi-supplier catalogs . . . 20
3.4 Downward compatibility with BMEcat® 1.2 . . . 20
4 Integrated Procurement Point (IPP) . . . 21
4.1 IPP applications . . . 21
4.1.1 External catalog . . . 21
4.1.2 Product request . . . 22
4.1.3 Price request . . . 23
4.1.4 Availability request . . . 23
4.1.5 Request for quotation . . . 24
4.2 IPP operations . . . 24
4.3 IPP information in the BMEcat® catalog document . . . 25
4.3.1 Product-overlapping IPP information . . . 25
4.3.2 IPP call-up specification . . . 25
4.3.3 IPP-inbound specification . . . 26
4.3.4 Product-related IPP information . . . 26
5 Price formulas . . . 26
5.1 Formula definition . . . 26
5.2 Formula utilization . . . 27
5.3 Example: metal surcharges . . . 27
6 Product configuration . . . 29
6.1 Configuration steps . . . 30
6.2 Feature-based configuration . . . 30
6.3 Component-based configuration . . . 31
6.4 Calculation of the order number (configuration code) . . . 31
6.5 Price calculation . . . 32
6.6 Pre-defined configurations . . . 32
6.7 Configuration rules . . . 32
6.8 Configuration formulas . . . 33
6.9 Example: Laptop configuration . . . 34
7 Classification systems, catalog group systems, and feature systems . . . 37
7.1 Definition of classification systems . . . 38
7.2 Definition of features . . . 38

Copyright © 2022 BME e.V. - BMEcat® Version 2005.2
Copyright © 2010-2021 BME e.V. - BMEcat® Version 2005.1
Copyright © 2005-2009 BME e.V. - BMEcat® Version 2005
Copyright © 1998–2004 Fraunhofer IAO, Stuttgart; Universität Essen BLI - BMEcat® Version 1.2

7.3 Definition of groups . . . 39
7.4 Definition of values . . . 39
7.5 Definition of units of measurement . . . 39
8 Changes in BMEcat 2005.1 . . . 40
9 Changes in BMEcat 2005.2 . . . 40
Reference of elements . . . 42
BMECAT . . . 43
HEADER . . . 46
CATALOG . . . 49
LANGUAGE . . . 55
DATETIME in the context of PRODUCT_PRICE_DETAILS . . . 56
AREA_REFS . . . 58
PRICE_FLAG . . . 59
DELIVERY_TIMES . . . 61
TIME_SPAN . . . 63
SUB_TIME_SPANS . . . 66
TRANSPORT . . . 69
SUPPLIER_IDREF . . . 70
BUYER_IDREF . . . 72
BUYER . . . 74
BUYER_ID . . . 76
ADDRESS in context BUYER . . . 78
CONTACT_DETAILS . . . 83
CONTACT_ROLE . . . 86
PHONE . . . 87
FAX . . . 89
EMAILS . . . 90
PUBLIC_KEY . . . 91
AGREEMENT . . . 92
DATETIME in the context of AGREEMENT . . . 95
MIME_INFO . . . 97
MIME . . . 99
LEGAL_INFO . . . 102
AREA_LEGAL_INFO . . . 103
SUPPLIER . . . 104
SUPPLIER_ID . . . 106
ADDRESS in context SUPPLIER . . . 108
DOCUMENT_CREATOR_IDREF . . . 113
PARTIES . . . 115
PARTY . . . 116
PARTY_ID . . . 118
ADDRESS . . . 120
AREAS . . . 124
AREA . . . 125
TERRITORIES . . . 127
T_NEW_CATALOG . . . 128
CLASSIFICATION_SYSTEM . . . 132
CLASSIFICATION_SYSTEM_VERSION_DETAILS . . . 137
CLASSIFICATION_SYSTEM_PARTY_IDREF . . . 139
CLASSIFICATION_SYSTEM_LEVEL_NAMES . . . 141
CLASSIFICATION_SYSTEM_LEVEL_NAME . . . 142
CLASSIFICATION_SYSTEM_TYPE . . . 143
ALLOWED_VALUES . . . 146
ALLOWED_VALUE . . . 147
ALLOWED_VALUE_VERSION . . . 149
ALLOWED_VALUE_SYNONYMS . . . 151
ALLOWED_VALUE_SOURCE . . . 152
PARTY_IDREF . . . 154
UNITS . . . 156
UNIT . . . 157

Copyright © 2022 BME e.V. - BMEcat® Version 2005.2
Copyright © 2010-2021 BME e.V. - BMEcat® Version 2005.1
Copyright © 2005-2009 BME e.V. - BMEcat® Version 2005
Copyright © 1998–2004 Fraunhofer IAO, Stuttgart; Universität Essen BLI - BMEcat® Version 1.2

FT_GROUPS . . . 160
FT_GROUP . . . 161
CLASSIFICATION_SYSTEM_FEATURE_TEMPLATES . . . 163
CLASSIFICATION_SYSTEM_FEATURE_TEMPLATE . . . 164
FT_VERSION . . . 167
FT_DEPENDENCIES . . . 169
FEATURE_CONTENT . . . 170
FT_FACETS . . . 175
FT_FACET . . . 177
FT_VALUES . . . 179
FT_VALUE . . . 180
VALUE_RANGE . . . 182
STARTVALUE . . . 183
ENDVALUE . . . 184
CONFIG_INFO . . . 185
PRODUCT_PRICE_DETAILS . . . 186
DATETIME in the context of ARTICLE_PRICE_DETAILS . . . 190
PRODUCT_PRICE . . . 191
PRICE_FORMULA . . . 195
PARAMETERS . . . 196
PARAMETER . . . 197
TAX_DETAILS . . . 198
PRICE_BASE . . . 200
FT_SYNONYMS . . . 201
FT_SOURCE . . . 202
CLASSIFICATION_GROUPS . . . 204
CLASSIFICATION_GROUP . . . 206
CLASSIFICATION_GROUP_ID . . . 212
CLASSIFICATION_GROUP_ID2 . . . 213
CLASSIFICATION_GROUP_VERSION . . . 214
CLASSIFICATION_GROUP_SOURCE . . . 216
CLASSIFICATION_GROUP_CONTACTS . . . 218
CLASSIFICATION_GROUP_SYNONYMS . . . 219
CLASSIFICATION_GROUP_FEATURE_TEMPLATES . . . 220
CLASSIFICATION_GROUP_FEATURE_TEMPLATE . . . 221
FT_ALLOWED_VALUES . . . 227
ALLOWED_VALUE_IDREF . . . 228
CATALOG_GROUP_SYSTEM . . . 229
CATALOG_STRUCTURE . . . 231
FORMULAS . . . 236
FORMULA . . . 237
FORMULA_VERSION . . . 243
FORMULA_SOURCE . . . 245
FORMULA_FUNCTION . . . 247
TERM . . . 249
PARAMETER_DEFINITIONS . . . 252
PARAMETER_DEFINITION . . . 253
PARAMETER_BASICS . . . 256
FREF . . . 257
PARAMETER_ORIGIN . . . 259
IPP_DEFINITIONS . . . 261
IPP_DEFINITION . . . 262
IPP_OPERATOR_IDREF . . . 267
IPP_OPERATION . . . 269
IPP_OUTBOUND . . . 271
IPP_OUTBOUND_PARAMS . . . 273
IPP_LANGUAGES . . . 275
IPP_TERRITORIES . . . 276
IPP_PRICE_CURRENCIES . . . 277
IPP_PRICE_TYPES . . . 278

Copyright © 2022 BME e.V. - BMEcat® Version 2005.2
Copyright © 2010-2021 BME e.V. - BMEcat® Version 2005.1
Copyright © 2005-2009 BME e.V. - BMEcat® Version 2005
Copyright © 1998–2004 Fraunhofer IAO, Stuttgart; Universität Essen BLI - BMEcat® Version 1.2

IPP_SUPPLIER_PID . . . 280
IPP_PRODUCTCONFIG_IDREF . . . 281
IPP_PRODUCTLIST_IDREF . . . 282
IPP_USER_INFO . . . 283
IPP_AUTHENTIFICATION_INFO . . . 284
AUTHENTIFICATION . . . 286
IPP_PARAM_DEFINITION . . . 287
IPP_INBOUND . . . 289
IPP_INBOUND_PARAMS . . . 291
PRODUCT in context T_NEW_CATALOG . . . 292
SUPPLIER_PID . . . 297
PRODUCT_DETAILS . . . 299
INTERNATIONAL_PID . . . 306
BUYER_PID . . . 307
MANUFACTURER_IDREF . . . 308
SPECIAL_TREATMENT_CLASS . . . 310
REMARKS . . . 311
PRODUCT_STATUS . . . 313
INTERNATIONAL_RESTRICTIONS . . . 315
ACCOUNTING_INFO . . . 316
COST_CATEGORY_ID . . . 318
AGREEMENT_REF . . . 319
PRODUCT_FEATURES . . . 320
REFERENCE_FEATURE_GROUP_ID . . . 325
REFERENCE_FEATURE_GROUP_ID2 . . . 326
FEATURE . . . 327
FTEMPLATE . . . 332
FVALUE . . . 335
VARIANTS . . . 337
VARIANT . . . 338
FEATURE_GROUP . . . 341
FEATURE_GROUP_NAME . . . 343
FEATURE_GROUP_DESCRIPTION . . . 345
PRODUCT_ORDER_DETAILS . . . 347
PACKING_UNITS . . . 350
PACKING_UNIT . . . 351
PRODUCT_REFERENCE . . . 353
PRODUCT_CONTACTS . . . 358
PRODUCT_IPP_DETAILS . . . 359
IPP . . . 360
IPP_PARAM . . . 362
PRODUCT_LOGISTIC_DETAILS . . . 363
CUSTOMS_TARIFF_NUMBER . . . 365
PRODUCT_DIMENSIONS . . . 366
MEANS_OF_TRANSPORT . . . 368
PRODUCT_CONFIG_DETAILS . . . 370
CONFIG_STEP . . . 374
CONFIG_FEATURE . . . 377
CONFIG_PARTS . . . 378
PART_ALTERNATIVE . . . 380
PREDEFINED_CONFIGS . . . 382
PREDEFINED_CONFIG . . . 384
CONFIG_RULES . . . 387
CONFIG_FORMULAS . . . 389
CONFIG_FORMULA . . . 390
PRODUCT_TO_CATALOGGROUP_MAP in context T_NEW_CATALOG . . . 391
ARTICLE in context T_NEW_CATALOG . . . 393
ARTICLE_DETAILS . . . 396
INTERNATIONAL_AID . . . 402
BUYER_AID . . . 403

Copyright © 2022 BME e.V. - BMEcat® Version 2005.2
Copyright © 2010-2021 BME e.V. - BMEcat® Version 2005.1
Copyright © 2005-2009 BME e.V. - BMEcat® Version 2005
Copyright © 1998–2004 Fraunhofer IAO, Stuttgart; Universität Essen BLI - BMEcat® Version 1.2

ARTICLE_STATUS . . . 404
ARTICLE_FEATURES . . . 405
ARTICLE_ORDER_DETAILS . . . 408
ARTICLE_PRICE_DETAILS . . . 411
DATETIME in the context of CATALOG . . . 413
ARTICLE_PRICE . . . 415
ARTICLE_REFERENCE . . . 418
ARTICLE_CONTACTS . . . 421
ARTICLE_LOGISTIC_DETAILS . . . 422
ARTICLE_TO_CATALOGGROUP_MAP in context T_NEW_CATALOG . . . 424
T_UPDATE_PRODUCTS . . . 426
PRODUCT in context T_UPDATE_PRODUCTS . . . 428
PRODUCT_TO_CATALOGGROUP_MAP in context T_UPDATE_PRODUCTS . . . 433
ARTICLE in context T_UPDATE_PRODUCTS . . . 435
ARTICLE_TO_CATALOGGROUP_MAP in context T_NEW_CATALOG . . . 438
T_UPDATE_PRICES . . . 440
PRODUCT in context T_UPDATE_PRICES . . . 442
ARTICLE in context T_UPDATE_PRICES . . . 445
Index . . . 447
Annex . . . 452
Basic data types . . . 453
Enumeration data types . . . 458
Special data types . . . 459
History of changes - Version 2005fd . . . 460
History of changes - Version 2005 . . . 473
History of changes - Version 2005.1 . . . 476
History of changes - Version 2005.2 . . . 477
Overview of elements - order by appearance . . . 478
Overview of elements - alphabetical order . . . 556

Copyright © 2022 BME e.V. - BMEcat® Version 2005.2
Copyright © 2010-2021 BME e.V. - BMEcat® Version 2005.1
Copyright © 2005-2009 BME e.V. - BMEcat® Version 2005
Copyright © 1998–2004 Fraunhofer IAO, Stuttgart; Universität Essen BLI - BMEcat® Version 1.2

1 Introduction

1.1 Overview

The BMEcat® format has been developed with the purpose of standardizing the exchange of product catalogs between suppliers and purchasing companies and thus simplifying it. In the underlying model the supplier creates a catalog in electronic form corresponding to the BMEcat® standard. In the following this catalog will be named catalog document. The catalog document enables additionally the integration of multimedia product data, for example illustrations, charts, technical documents, operating instructions etc.

BMEcat® supports multilingual catalog content as well as multiple languages. The BMEcat® format is not limited to tangible products, but can also be used for the description of software, services, rights, information goods, digital products etc. Therefore, in the following the term 'product' respectively 'product catalog' will be expanded to all kinds of commercial goods as far as they are suitable for being represented in a catalog.

Typically the supplier transmits the BMEcat® catalog document to a purchasing organization that processes the contents of the catalog document and, for example, imports it into an e-procurement or catalog management system. This procedure is called catalog data exchange. The BMEcat® format does not only enable the supplier the transfer of the complete product data, but also for example the update of price data or individual products.

BMEcat® catalog documents, however, are not limited to the mere use for transmission to purchasing companies. Rather they are suitable just the same for the update of on-line shops administered by the suppliers, for sales support, for the supply of electronic market places, and quite generally for the transmission of product data - either externally between different companies or internally within a single company.

The use of BMEcat® represents an important step on the way to standardized business-to-business e-commerce. Companies which place BMEcat® catalogs at their customers' disposal or are able to process their suppliers' BMEcat® catalogs, are complying with an important requirement for electronic business transactions, the participation in new trading platforms and the automation of their sales respectively procurement processes. Additionally to BMEcat®, openTRANS (see **www.opentrans.org**), a transaction standard based on BMEcat® can be employed for the data exchange within the context of order processing.

BMEcat® is being developed unter the umbrella of the Bundesverband Materialwirtschaft, Einkauf und Logistik e.V. (BME), which is the German Association of Purchasing Managers. The BME is a service provider for its about 6,000 members, which represent more than 80 percent of the purchasing volume of the German industry (about 700 Billion Euros). More information on the BMEcat® organization and possibilites to contribute to the standard is available at **www.bmecat.org** .

1.2 Application of XML

BMEcat® catalog documents are coded in XML, the "eXtensible Markup Language". XML is the de-facto standard for data exchange in the internet and is being developed by the World Wide Web Consortium (see **http://www.w3.org/XML**). XML enables the simultaneous codification of structures and data in a catalog document as opposed to, for instance, conventional, less efficient formats like MS Excel files or comma-separated value lists (CSV files). The structure of BMEcat® catalog documents is formally very exactly described by use of the language XML Schema (XSDL); this formal specification is published in an accompanying separate document in the form of XSD files and can be accessed via the website **www.bmecat.org**.

1.3 Supplementary activities and standards

BMEcat® standardizes the exchange of electronic product catalogs. Another, though supplementing area of standardization concerns the classification and description of products (and services). For this purpose, product classes and classification hierarchies are being defined for various applications and branches of industry. In addition, the standardized description of products is enabled by product features assigned to the classes. Both

Copyright © 2022 BME e.V. - BMEcat® Version 2005.2
Copyright © 2010-2021 BME e.V. - BMEcat® Version 2005.1
Copyright © 2005-2009 BME e.V. - BMEcat® Version 2005
Copyright © 1998–2004 Fraunhofer IAO, Stuttgart; Universität Essen BLI - BMEcat® Version 1.2

are subject of product classification systems such as eCl@ss, ETIM, profiCl@ss, and UNSPSC. The BMEcat® standard is not committed to any one of these classification systems and does not in any case recommend any specific BMEcat® classifications. Rather the BMEcat® standard is conceived in such a way that almost all classification systems known at present can be used for the classification and description of products in BMEcat® catalogs.

1.4 Implementation support

The BMEcat® standard is meanwhile being supported by numerous software providers and systems. In particular, this applies to e-procurement systems, sell-side shop systems, electronic market places, service providers taking care of content supply and content maintenance as well as product data and catalog management systems. BMEcat® catalogs can be created and processed with the help of these systems. In addition, special software tools for the production and evaluation of BMEcat® catalogs as well as the conversion of data into the BMEcat® format are offered. For supplementary information, please refer to **www.bmecat.org**.

1.5 Website www.bmecat.org

Inter alia, the following information is provided in German and English on the website www.bmecat.org:

- Download of the specification in different formats
- Download of the specification in form of XML DTD and XML Schema
- Download of example catalogs

Error messages and change messages as well as known errors respectively their corrections can be accessed via the website.

Furthermore, also information about the participation in the BMEcat® development via the BMEcat® change forum can be found.

2 Specification

2.1 Specification structure

The BMEcat® format is described in detail in a total by five documents. These are:

- Specification BMEcat®
- Specification BMEcat® - Module Price Formulas
- Specification BMEcat® - Module Integrated Procurement Point
- Specification BMEcat® - Module Product Configuration
- Specification BMEcat® - Module Classification Systems, Catalog Groups Systems, and Feature Systems

In the module specifications, functions and data areas are described that can be used optionally in each case. For the facilitation of the handling, these have been stored outside in separate partial specifications which are needed only in case the extended functions are used. Wherever necessary in the specification, the module specifications are referred to. The module specifications have been arranged in such a way that they describe a range exclusively within themselves, without having to fall back upon the other modules. This signifies that the module specifications are not non-overlapping. There are for example also formula specifications in the module product configuration, since formulas take care of both the price calculation as well as the calculation of feature values in the course of the configuration.

The detailed specification is supplemented by the technical specification in the form of XSD files as well as example files of BMEcat catalogs®.

Copyright © 2022 BME e.V. - BMEcat® Version 2005.2
Copyright © 2010-2021 BME e.V. - BMEcat® Version 2005.1
Copyright © 2005-2009 BME e.V. - BMEcat® Version 2005
Copyright © 1998–2004 Fraunhofer IAO, Stuttgart; Universität Essen BLI - BMEcat® Version 1.2

In order to facilitate the navigation within the specification documents, relevant key terms (e.g., element names) with cross references are provided that allow the direct jump to the respective place in the document. The cross references are clearly marked in green letters.

References to external resources in the World Wide Web are likewise available (e.g., for definitions of standardized data types) and are shown as blue hyperlinks to enable the direct jump to the relating website.

The **reference of elements** is the main part of the specification. Herein, all elements are defined in the order they can appear in a BMEcat® catalog document. The **alphabetical index of BMEcat® elements** allows the quick jump to individual elements. This index as well as the **table of contents** is made of cross references with immediate hyperlinks to the elements.

The appendix is subdivided into three areas: The list of data types describes in detail all data types defined in BMEcat®(i.e., base data types, enumeration data types, and special data types). The change history gives an overview in alphabetical order of the elements changed in BMEcat® 2005. Last but not least, there are two additional lists of all BMEcat® elements (illustration of the document hierarchy, and a-z list).

2.2 Description of elements

Each element is described according to the same scheme. The description is structured as follows:

- the **designation: descriptive element name**,
- the **element name** for the use in XML documents,
- the **explanation** describes the function respectively meaning of the element,
- a chart for the visualization of the sub elements of the element as well as the structural context:

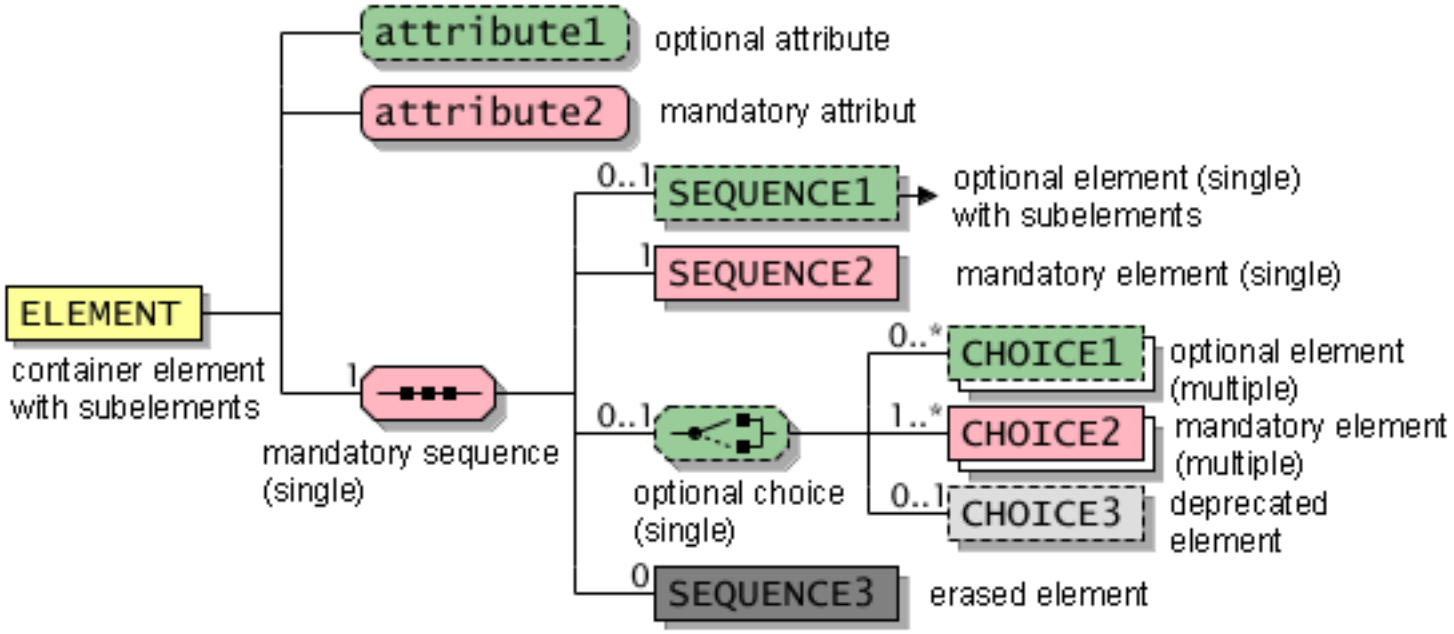

Figure 2-1: Visualization of elements and sub elements

The described element always appears on the left side and is yellow (light); the sub elements appear on the right side one beneath the other; the elements have angular edges, XML attributes have round edges; if a sub element is red (respectively dark), it is a mandatory field; if it is green (respectively light), then it is optionally usable (optional field, also refer to section **mandatory and optional fields**); elements omitted in the next BMEcat® version are light grey, elements that are already no longer permitted in the current version are dark grey; the symbols and abbreviations connected with the elements have the following meaning:

- **"0...1"** as well as a dotted border indicate an optional element that can appear, but does not have to appear;
- **"1"** as well as a continuous border indicate an element that has to appear exactly once in this place;
- **"0...*x*"** as well as a dotted border indicate that the element can appear *x* times in this place, but it is not required to appear; an "*" (asterisk) stands for an infinite number of appearances;

Copyright © 2022 BME e.V. - BMEcat® Version 2005.2
Copyright © 2010-2021 BME e.V. - BMEcat® Version 2005.1
Copyright © 2005-2009 BME e.V. - BMEcat® Version 2005
Copyright © 1998–2004 Fraunhofer IAO, Stuttgart; Universität Essen BLI - BMEcat® Version 1.2

- **"1...*x*"** as well as a continuous border indicate that the element can appear *x* times in this place, however, it has to appear at least once, an "*" (asterisk) stands for an infinite number of appearances;
- the -symbol indicates that the element can have at least one sub element; if this character is missing, it refers to a leaf element, i.e. a data type has to be indicated in this case.
- the 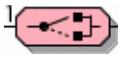 -symbol indicates that exactly one of the following elements has to appear;
- the 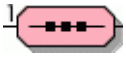 -symbol indicates that the following elements can appear in the given order; mandatory elements have to, optional elements can appear;

- the **table “general“** describes briefly the following characteristics of the element: the column “Used in“ demonstrates in which superior elements the respective element can be used; the column “Default value“ indicates which value is assigned, if the element is not existing (also refer to section **mandatory and optional fields**); the column “Data type“ indicates the domain of values for the element (if it has no sub elements); the column “Field length” indicates the maximal number of characters that can be assigned to the element (also refer to **symbol codification in XML**); the column "Lang.specific" indicates whether the field contents is dependendt on the language; the column “l.chg. in ver.” indicates the BMEcat® version in which the element has been changed last,
- the **table "attributes“** lists the attributes used in the element: the column "Designation" contains the name describing the attribute, if possible, in one single word; the column “Attribute name“ indicates the XML attribute; the column “Mandatory/optional“ indicates, whether the attribute is mandatory or optional (also refer to section **mandatory and optional fields**); the column “Explanation" describes the use of the attribute; the columns "Default value", "Data type", "Field length", "Lang.specific", and "L.chg. in ver." are used like in table "general"; rows with light grey background indicate attributes that will be omitted in the next BMEcat® version; attributes that are already no longer permitted in the current version are further listed for the sake of completeness, however, the respective row has a dark grey background,
- if it is further specified how values are to be assigned to an attribute, for each attribute a **table with a list of values** can follow; thereby it is to be differentiated whether the list containes predefined values (i.e., these values are suggested, but also other values can be used in accordance with the description of the attribute), or whether the list contains all permitted values (i.e., only values from this list, no others may be used); the column "Attribute value" indicates the values which can or which have to be assigned to the attribute; the columns "Designation", "Explanation", and "l.chg. in ver." are used like in table "Attributes",
- in the **table "elements"** the sub elements of the respective element are listed in their order; the sub elements are described by the following columns: the column "Element name" contains the notation which has to be used in the XML document; if the sub element itself has no more sub elements, in this column the attributes of the sub element are listed additionally; the columns "Designation", "Mandatory/optional", "Default value", "Data type", "Field length", "Lang.specific", and "l.chg. in ver." are used like in the table "Attributes" respectively "General"; rows with light grey background indicate elements, which are omitted in the next BMEcat® versions; attributes which are already no longer permitted in the current BMEcat® version are further listed for the sake of completeness, however, the respective row has a dark grey background,
- an **example** complements the element specification; in these examples, all BMEcat® elements are black and its values as well as attribute values are blue.

The XML examples show the BMEcat® application on the basis of cut-outs from a catalog document. Partly because of space restrictions, the more complex elements are not shown with their complete contents, but only schematically by opening and closing tags, e.g., `<BUYER>...</BUYER>`.

In the describing texts the following symbols are used for giving important information:

Symbol	Meaning
	Attention: reference to possible source of error
	Note: describing note containing additional information
	New from BMEcat® 1.2 to BMEcat® 2005 final draft

Figure 2-1: Symbols in the BMEcat® specification

2.3 Mandatory and optional fields

Copyright © 2022 BME e.V. - BMEcat® Version 2005.2
Copyright © 2010-2021 BME e.V. - BMEcat® Version 2005.1
Copyright © 2005-2009 BME e.V. - BMEcat® Version 2005
Copyright © 1998–2004 Fraunhofer IAO, Stuttgart; Universität Essen BLI - BMEcat® Version 1.2

The BMEcat® format makes a distinction between mandatory und optional fields. Mandatory fields are XML elements that have to appear in an XML file adhering to BMEcat® within the encompassing context. Optional fields are XML elements that can appear in an XML file adhering to BMEcat® within its context. Optional fields in the tables of this specification are green (respectively light), and mandatory fields are red (respectively dark).

A catalog document is adhering to the BMEcat® format, if it contains all mandatory fields, and no other than the optional fields defined in the specification are used in the given order and with the specified cardinality.

For example, in BMEcat® the short description **DESCRIPTION_SHORT** of a product is a mandatory field within the context **PRODUCT_DETAILS**, whereas the long description **DESCRIPTION_LONG** is an optional field in the same context.

Therefore, if the parent element **PRODUCT_DETAILS** appears in a catalog document, the element **DESCRIPTION_SHORT** has to be existing and must not be empty, whereas the element **DESCRIPTION_LONG** can follow **DESCRIPTION_SHORT**. The next examples illustrate this requirement.

Example 1: Short description only (mandatory field):

```
<PRODUCT_DETAILS>
    <DESCRIPTION_SHORT>File</DESCRIPTION_SHORT>
</PRODUCT_DETAILS>
```

Example 2: Not permitted - Empty short description (mandatory field):

```
<PRODUCT_DETAILS>
    <DESCRIPTION_SHORT></DESCRIPTION_SHORT>
</PRODUCT_DETAILS>
```

Example 3: Short description (mandatory field) and long description (optional field)

```
<PRODUCT_DETAILS>
    <DESCRIPTION_SHORT>File</DESCRIPTION_SHORT>
    <DESCRIPTION_LONG>This file is made of very solid material.</DESCRIPTION_LONG>
</PRODUCT_DETAILS>
```

Determining whether an element has to be used in its context can be resolved by parsing from the outside to the inside. The following example is to illustrate this: The element for skeleton agreement information **AGREEMENT** is an optional field in the context of **HEADER**. Thus, information on skeleton agreements can be stored in the catalog header, though it is not required to provide this information at all. If the decision is made, however, to use the element **AGREEMENT**, in this element the sub elements **AGREEMENT_ID** for the contract number and **DATETIME** in the context of AGREEMENT have to be indicated for the end date of the contract, since both elements are mandatory in the context of **AGREEMENT**.

The two following examples illustrate this fact.

Example 4 (HEADER without skeleton agreement information):

```
<HEADER>
    <CATALOG>...</CATALOG>
    <BUYER>...</BUYER>
    <SUPPLIER>...</SUPPLIER>
</HEADER>
```

Example 5 (HEADER with skeleton agreement information):

```
<HEADER>
    <CATALOG>...</CATALOG>
    <BUYER>...</BUYER>
    <!-- Here AGREEMENT can be indicated (optional field) -->
    <AGREEMENT>
        <!-- Here AGREEMENT_ID has to be indicated (mandatory field) -->
        <AGREEMENT_ID>21312</AGREEMENT_ID>
        <!-- Here DATETIME (or AGREEMENT_END_DATE) has to be indicated (mandatory field) -->
        <DATETIME type="agreement_end_date">
            <!-- Here DATE has to be indicated (mandatory field) -->
            <DATE>2002-05-31</DATE>
        </DATETIME>
```

Copyright © 2022 BME e.V. - BMEcat® Version 2005.2
Copyright © 2010-2021 BME e.V. - BMEcat® Version 2005.1
Copyright © 2005-2009 BME e.V. - BMEcat® Version 2005
Copyright © 1998–2004 Fraunhofer IAO, Stuttgart; Universität Essen BLI - BMEcat® Version 1.2

```
        <!-- Here AGREEMENT_DESCR could be indicated (optional field) -->
    </AGREEMENT>
    <SUPPLIER>...</SUPPLIER>
</HEADER>
```

2.4 Data types

Data types determine the format and the range of values for the elements defined in BMEcat®. Exactly one data type is assigned to each atomic element. The use of data types enables a detailed description of the way how to use an element correctly.

In the BMEcat® format a distinction is made between basic data types, enumeration data types, and special data types.

The **basic data types** define current and frequently used data formats, e.g., character strings, integers, yes/no values etc. Refer to the **Table of basic data types** in the appendix.

Furthermore, **enumeration data types** are used that are based on international standards. An enumeration data type is defined by a set of permissible values being character strings. If an enumeration data type is assigned to an element, then this element can only take on a value from the set of the permissible values. All enumeration data types are indicated in the **table of enumeration data types**.

In the **table of special data types** in the appendix some **special data types** with dedicated functions can be found. For the time being these data types are empty in BMEcat®, thus defined without contents and do not have to be taken further into account by the user. Only in the case of the user specific or module based extension of the BMEcat® format, these data types are defined and concretized anew.

2.5 Character codification in XML

The codification of the individual characters in the XML elements should be indicated in each BMEcat® file. This takes place in the attribute "encoding" of the XML text declaration, e.g., `<?xml version="1.0" encoding="UTF-8"?>` .

BMEcat® supports all sets of characters mentioned in the XML specification (i.e., ISO-8859-1, UTF-8, and UTF-16). Concerning the UTF sets, each character is usually stored in one or more bytes.

It is important to note that the field length in the column "Field length" refers to the individual character and not to the number of bytes used by the set of characters. For example the "Ü" codified as "Ü" represents a single character.

Concerning this, also refer to **Chapter: Multilingual catalog documents**.

2.6 Version history

Version	Date	Description
1.0	1999-11-08	First version
1.01	2000-01-02	Elimination of individual inconsistencies and revision of the examples
1.2 final draft	2000-12-19	Error corrections, smaller extensions and a general improvement of the documentation
1.2	2001-03-27	Translation of the feedback received on version 1.2 final draft
2005 final draft	2005-05-10	Revision and extension of the functionality; revised form and content of the specification
2005	2005-11-14	Translation of the feedback received on version 2005 final draft
2005.1	2010-10-03	Extension of the data model for classification systems
2005.2	2022-10-01	Improved support of classification systems and minor fixes

Table 2-1: Version history of BMEcat®

3 Catalog data exchange with BMEcat®

Copyright © 2022 BME e.V. - BMEcat® Version 2005.2
Copyright © 2010-2021 BME e.V. - BMEcat® Version 2005.1
Copyright © 2005-2009 BME e.V. - BMEcat® Version 2005
Copyright © 1998–2004 Fraunhofer IAO, Stuttgart; Universität Essen BLI - BMEcat® Version 1.2

3.1 Transactions

Transactions determine which parts of a catalog will be transferred with the catalog document and how this data has to be processed in the target system.

In BMEcat® three transactions are at hand:

- Transfer of a new catalog: **T_NEW_CATALOG**,
- Update of product data: **T_UPDATE_PRODUCTS**,
- Update of price data: **T_UPDATE_PRICES**.

The application of the update transactions permits the reduction of the volume of the documents to be transferred, since changes do not require the new transfer of the complete catalog. Example: Once a year the supplier transfers the complete catalog with the transaction **T_NEW_CATALOG** and every three months an update of the assortment with the transaction **T_UPDATE_PRODUCTS**; whereas the supplier transfers price updates at the time they occur (transaction **T_UPDATE_PRICES**).

The transaction is indicated in the catalog document below the **BMECAT** element. The data areas that may be transferred within the transactions differ one from the other; thus in the context of the price updates only price determining information can be transmitted.

In the following example the combination of the **LANGUAGE** and **CATALOG_VERSION** elements as well as the attributes "**T_UPDATE_PRODUCTS -->prev_version**" respectively "**T_UPDATE_PRICES -->prev_version**" and "**PRODUCT -->mode** in context T_UPDATE_PRODUCTS" is shown by a series of different transactions.

Action	Transaction	Reaction of the target system	LANGUA	CATAL ID	CATAL VERSIO	prev_ version	mode
Transfer of a new product catalog	T_NEW_ CATALOG	The completely new catalog is imported. No data from previous catalog versions is retained. All products are inserted anew.	deu	23	2.0	-	-, since always new
Transfer of an additional language for the new product catalog	T_NEW_ CATALOG	Only the language-dependent data for the changed and new products is imported. All other information (e.g., prices), that may be different from the previous transfer, is ignored.	eng	23	2.0	-	-, since always new
Transfer of updated prices	T_UPDATE_ PRICES	The complete price information associated with the respective products is updated. Concerning these products, all prices existing in the target system are deleted and new prices are defined.	without meaning	23	2.0	0	-, since always update
Transfer of updated prices	T_UPDATE_ PRICES	see previous row	without meaning	23	2.0	1	-, since always update
Transfer of new and updated products respectively deletion of products	T_UPDATE_ PRODUCTS	All language-independent elements as well as the language-dependent elements in German associated with the products are updated respectively new products are imported. The language-dependent information in English of the preceding transaction **T_NEW_CATALOG** (in English language) remains unchanged. If a product is deleted, all data, thus language-dependent and language-independet data is deleted. Information that cannot be transferred by the BMEcat® format and which has been entered directly into the target system should not be deleted.	deu	23	2.0	2	new, update or delete
Transfer of an additional language for the changed products	T_UPDATE_ PRODUCTS	All language-independent elements as well as the language-dependent elements in English associated with the products are updated respectively new products are imported. The language-dependent information in German of the preceding transaction **T_NEW_CATALOG** (in German language) remains unchanged.	eng	23	2.0	3	new, update or delete

Copyright © 2022 BME e.V. - BMEcat® Version 2005.2
Copyright © 2010-2021 BME e.V. - BMEcat® Version 2005.1
Copyright © 2005-2009 BME e.V. - BMEcat® Version 2005
Copyright © 1998–2004 Fraunhofer IAO, Stuttgart; Universität Essen BLI - BMEcat® Version 1.2

		If a product is deleted, all , thus language-dependent and language-independet data is deleted. Information that cannot be transferred by the BMEcat® format and which has been entered directly into the target system should not be deleted.					
Transfer of updated prices	**T_UPDATE_PRICES**		without meaning	23	2.0	4	-, since always update
...	...	...	...	...	...	...	...
Transfer of a new product catalog	**T_NEW_CATALOG**	The completely new catalog is imported. No data from previous catalog versions is retained. All products are inserted anew.	deu	23	3.0	-	-, since always new

Table 3-1: Example combination of the different BMEcat® transactions

3.2 Data areas

In a BMEcat® document numerous data on the catalog and its contained products can be transferred. Next we outline the most important data areas.

3.2.1 Catalog header

In the catalog header (**HEADER**) the products themselves are not described, but information concerning the identification and the validity of the catalog, the catalog creator and receiver as well as the underlying skeleton agreement is transferred. Furthermore default values that are applicable for all contained products can be placed; e.g., language and currency.

The catalog header is structured in the same way for all three transactions.

3.2.2 Product data area

The product data area takes care of the transmission of all product-related data. It is divided into several ranges, inter alia:

- Product identification (product number of the supplier),
- Product details (short and long description, additional identifiers, manufacturer, references, procurement information, …),
- Product features (features and values, classification, …),
- Order information (order unit, minimum order quantity, …),
- Price information (amount, currency, unit, quantity intervals, …),
- Multimedia data (product illustrations, …),
- Product references,
- Logistics data,
- Configuration data.

3.2.3 Classification systems, catalog group systems, and feature systems

For structuring the catalog, building classes of similar products, and describing products by common features respective systems can be transferred with the **CLASSIFICATION_SYSTEM** element. Eventually, these systems can be referenced on the product level in the context of product features and classification. There are different kinds and terms of these systems, i.e.:

- Catalog group systems for hierarchical navigation within the catalogs,
- Catalog structures for hierarchical navigation within the catalogs,
- Material and product group systems for subdividing an assortment,
- Classification systems for the mostly hierarchical and unequivocal assortment structuring,
- Standardized classification systems (e.g., eCl@ss, ETIM, GPC, proficl@ss, UNSPSC),

Copyright © 2022 BME e.V. - BMEcat® Version 2005.2
Copyright © 2010-2021 BME e.V. - BMEcat® Version 2005.1
Copyright © 2005-2009 BME e.V. - BMEcat® Version 2005
Copyright © 1998–2004 Fraunhofer IAO, Stuttgart; Universität Essen BLI - BMEcat® Version 1.2

- Subject group systems,
- Reference hierarchies,
- Feature systems,
- Feature group systems,
- Feature libraries,
- Feature lexica,
- Feature dictionaries.

For a detailed description refer to the separate document "Specification BMEcat® 2005 - classification, catalog group and feature systems".

If the used classification system is already existing in the catalog importing target system, the transfer can be omitted; in this case only the product-related classifications are transferred in the catalog document (see product data area). In particular this applies to standardized classification systems.

3.2.4 Product-overlapping data areas

Depending on individual transaction, additional product-overlapping data can be transferred in the catalog document; this data is eventually used on the product level. Thus it is only defined once, i.e.:

- Business partners who can be referenced in different places in the catalog (e.g., manufacturer, contact partners, …),
- Formulas for dynamic calculation of prices,
- Areas combining several individual areas into a new one (e.g., European Union, Benelux, NATO),
- Modules for integrating extensions into BMEcat® in a defined way and according to downward-compatibility

3.3 Extensions in BMEcat® 2005

In BMEcat® 2005 additional functions have been integrated besides numerous detail improvements of the data models and the revised form of the specification. These extensions are meant to support the catalog-based sales and procurement processes in a better way and to contribute to the optimization of the catalog data exchange.

In the following the most important extensions are described briefly. For detailed descriptions refer to separate documents of the specification as well as to the change history.

3.3.1 Integrated Procurement Point (IPP)

In BMEcat® 2005 the closer integration of both business partners supplementary to the mostly decoupled catalog production at the supplier’s site and its subsequent catalog use at the purchasing company’s site is supported. This support is expressed in the term Integrated Procurement Point (IPP): The catalog used by the purchaser offers extended functions in order to query information administered by the supplier or to call up systems administered by the supplier.

The following IPP applications are at hand:

- External catalog,
- Product request,
- Price request,
- Availability request,
- Request for quotation.

First, the respective IPP applications provided by the catalog creator can be described (**IPP_DEFINITIONS** within the product-overlapping data area respectively **PRODUCT_IPP_DETAILS** within the product data area). The use of the functions themselves, i.e. their implementation and the necessary data exchange, can thereby take place by employing a standardized protocol and format independently from BMEcat®, such as OCI (Open Catalog interface) of SAP, PunchOut of Ariba, and Roundtrip of CommerceOne. Additionally, BMEcat® 2005

Copyright © 2022 BME e.V. - BMEcat® Version 2005.2
Copyright © 2010-2021 BME e.V. - BMEcat® Version 2005.1
Copyright © 2005-2009 BME e.V. - BMEcat® Version 2005
Copyright © 1998–2004 Fraunhofer IAO, Stuttgart; Universität Essen BLI - BMEcat® Version 1.2

provides special document types for price and availability requests; for requests for quotations the openTRANS format can also be used.

For a detailed description refer to the separate document "Specification BMEcat® 2005 – Integrated Procurement Point".

3.3.2 Formulas

In addtion to the transfer of fixed product prices, dynamic price calculation is supported in BMEcat® 2005. Thus also such products can be described in catalogs, whose prices cannot already be determined at the time of the catalog production, since they depend on parameters that, for example, have to be provided by the buyer (e.g., additional order parameters, product characteristics) or are provided by external sources (e.g., metal quotations at stock exchanges). For this purpose, formulas are used that describe the price calculation on the basis of a term and its included parameters. These formulas are defined in the transaction area (**FORMULAS**) and can be used on the product level in the context of price information (**PRODUCT_PRICE_DETAILS**). For example, the price formulas can be used to represent metal surcharges.

For a detailed description refer to the separate document "Specification BMEcat® 2005 - Formulas".

3.3.3 Product configuration

In BMEcat® 2005 the product model has been extended to be able to transfer configurable products (**PRODUCT_CONFIG_DETAILS**). In BMEcat® 1.2 only feature-based variants having the same price could be described. These restrictions do not exist any longer: Product configuration can take place in several steps (**CONFIG_STEP**), be it feature-based (**CONFIG_FEATURE**), component-based (**CONFIG_PARTS**), or in a combined way; the catalog document contains an exact description according to which rules the configuration is to be completed and how the product price and the order number respectively the configuration code have to be calcuated.

For a detailed description refer to the separate document "Specification BMEcat® 2005 – Product Configuration".

3.3.4 Logistics data

In BMEcat® 2005 also logistics data can be transferred in addition to order information and product features. The new **PRODUCT_LOGISTIC_DETAILS** element, which can integrate inter alia the following information, takes care of this:

- Product measurements (length, height, width, volume, weight),
- Delivery periods,
- Conditions and means of transport
- Origin and customs rate,
- Information about dangerous goods.

3.3.5 Multilingual catalog documents

In BMEcat® 2005 multilingual catalogs can be transferred with only a single catalog document (= 1 file). In BMEcat® 1.2, a separate catalog document had to be provided for each language; these catalog documents differed only by the language-dependent elements.

Copyright © 2022 BME e.V. - BMEcat® Version 2005.2
Copyright © 2010-2021 BME e.V. - BMEcat® Version 2005.1
Copyright © 2005-2009 BME e.V. - BMEcat® Version 2005
Copyright © 1998–2004 Fraunhofer IAO, Stuttgart; Universität Essen BLI - BMEcat® Version 1.2

In multilingual catalog documents the attribute "long", which is available optionally for all language-dependent elements, indicates the respective language; e.g., short and long description, feature name. The attribute "long" contains the language of the text, which is codified analogous to the data type **dtLANG**. In case of monolingual catalog documents, the indication can be omitted, if the default language has already been determined in the catalog header (see **LANGUAGE** element with attribute "default").

For multilingual catalogs it has to be considered that the selected XML codification standard must be able to codify all languages contained in the catalog document (see also **http:/ / www.unicode.org/ iuc/iuc10/ languages.html**). If no suitable codification standard for all necessary languages can be found, an individual catalog document for each language has to be provided analogous with the procedure in BMEcat® 1.2.

To be able to show the structure of the BMEcat® standard in a better way, in this specification the cardinalities of language-dependent elements are always presented for monolingual catalog documents only. This refers to both the indications in the column "Single/Multiple" as well as to the model diagrams. All elements having an entry "yes" in the column "Lang.specific" and being of data type **dtMLSTRING**, may be used several times in a multilingual catalog document; thus their actual cardinality is "Multiple".

3.3.6 Multi-supplier catalogs

With BMEcat® 2005, multi-supplier catalog documents containing products of several suppliers can be created; the products maintain their supplier product numbers. For this purpose, in BMEcat® 1.2 the product number had to be unique for all products. This restriction does not exist any longer, thus genuine multi-supplier catalogs are supported.

In a multi-supplier catalog the different suppliers have to be defined in the catalog header. When referring to each product in the **SUPPLIER_PID** element, the product number of the supplier and additionally the reference to the respective supplier's identifier has to be entered.

3.4 Downward compatibility with BMEcat® 1.2

BMEcat® 2005 is fully downward compatible with BMEcat® 1.2 meaning that catalog documents adhering to BMEcat® 1.2 are also adhering to BMEcat® 2005. Thus BMEcat® 1.2 catalog documents already existing can also be processed by such target systems, which support BMEcat® 2005 only.

In the course of the BMEcat® 2005 development process, numerous change requests and new requirements from the most diverse companies, industries, application areas and perspectives have been collected, documented and discussed. Besides relevance and necessity as to contents, preserving downward compatibility was examined. In many cases, accepting a change request could be implemented by supplementing the specification documents, adding optional elements, and extending domains (of data types); hence the basic BMEcat® document structure remained unchanged.

In some few data areas it was, however, necessary to modify the existing BMEcat® 1.2 structure. This was done by maintaining downward compatibility, i.e., by marking certain elements as to be omitted in the future, i.e. these elements will not be permitted but only in the next BMEcat® version. The model diagrams show these elements in light grey.

The most remarkable modification results from renaming the **ARTICLE** element as well as its **ARTICLE_...** sub elements into **PRODUCT** respectively **PRODUCT_....**. The reason for renaming is the fact that in the English-speaking world "article" is mostly understood as newspaper article. Due to the aimed international orientation the renaming had become necessary. In order to maintain downward compatibility to version 1.2, the elements are nevertheless still contained in the old naming. Concerning their structure, they are as far as possible identical with the new "product" elements and also contain most of the new sub elements. Because of the concurrence as to structure and contents, the sub elements of ARTICLE are not again defined, in order to not enlarge the documentation unnecessarily.

Copyright © 2022 BME e.V. - BMEcat® Version 2005.2
Copyright © 2010-2021 BME e.V. - BMEcat® Version 2005.1
Copyright © 2005-2009 BME e.V. - BMEcat® Version 2005
Copyright © 1998–2004 Fraunhofer IAO, Stuttgart; Universität Essen BLI - BMEcat® Version 1.2

The completely new models for IPP (**PRODUCT_IPP_DETAILS**) and product configuration (**PRODUCT_CONFIG_DETAILS**) cannot be used in the element **ARTICLE**.

Further changes concern the following data areas:

- The transfer of catalog group systems with the **CATALOG_GROUP_SYSTEM** element will be dropped in the next BMEcat® version; the extended **CLASSIFICATION_SYSTEM** element will take over this function.
- The mapping of products to catalog groups of a catalog group system with the **ARTICLE_TO_CATALOGGROUP_MAP** element will be dropped in the next BMEcat® version; the **REFERENCE_FEATURE_GROUP_ID** element will take over this function.
- The transfer of information about the purchasing and the selling company in the catalog header with the elements **BUYER** and **SUPPLIER** will be dropped in the next BMEcat® version; the **BUYER_IDREF** and **SUPPLIER_IDREF** elements in combination with the **PARTY** element will take over this function.
- The definition of dates with the **DATETIME** in the context of AGREEMENT element and its **DATE**, **TIME** and **TIMEZONE** sub elements will be dropped in the next BMEcat® version; context-specific elements of data type **dtDATETIME** will take over this function.

In BMEcat® 1.2 only the **FEATURE_SYSTEM** element has been marked as to be dropped in the future. Therefore, it is not any longer permitted in BMEcat® 2005; the model diagram of the super-ordinate **T_NEW_CATALOG** element displays this element in dark grey colour; likewise, the entry in the element table has a dark grey background.

4 Integrated Procurement Point (IPP)

In BMEcat® 2005 the closer integration of both business partners supplementary to the to a large extent decoupled catalog production at the supplier's site and the subsequent catalog use at the purchasing company's site is supported. This is expressed in the term Integrated Procurement Point (IPP): The catalog used by the purchaser offers extended functions in order to query information administered by the supplier or to call up systems administered by the supplier.

With the IPP concept the inter-company integration of catalog-based transaction systems (i.e., sell side, buy side and market place systems) can be improved in case the information systems involved communicate synchronously with each another via defined messages. Synchronous communication means that in the context of a session a sequence of documents referring to one another is mutually exchanged. Depending on the application, this document sequence can include user interactions or can also be processed completely automatically.

The following IPP applications are at hand:

- **External catalog**
- **Product request**
- **Price request**
- **Availability request**
- **Request for quotation**

External catalog is the most important IPP application. Depending on the software provider, it is also called PunchOut or Roundtrip.

4.1 IPP applications

4.1.1 External catalog

The external catalog is an alternative to the conventional exchange of catalog data between suppliers and buyers. While conventionally the catalog data of the supplier is transferred with the use of the BMEcat® transaction **T_NEW_CATALOG** and is imported into a catalog system of the buyer, the IPP application external

Copyright © 2022 BME e.V. - BMEcat® Version 2005.2
Copyright © 2010-2021 BME e.V. - BMEcat® Version 2005.1
Copyright © 2005-2009 BME e.V. - BMEcat® Version 2005
Copyright © 1998–2004 Fraunhofer IAO, Stuttgart; Universität Essen BLI - BMEcat® Version 1.2

catalog calls up a remote catalog. The re-transfer to the calling system contains the product data selected by the user or automatically accessed. In the first case, the user accesses the remote system and selects demanded products or configures a product in this system (i.e., remote product configurator). The result of the selection is re-transferred as a product list into the calling system and into the procurement process started there. The data exchange between supplier and buyer is shown in **Figure IPP-1**.

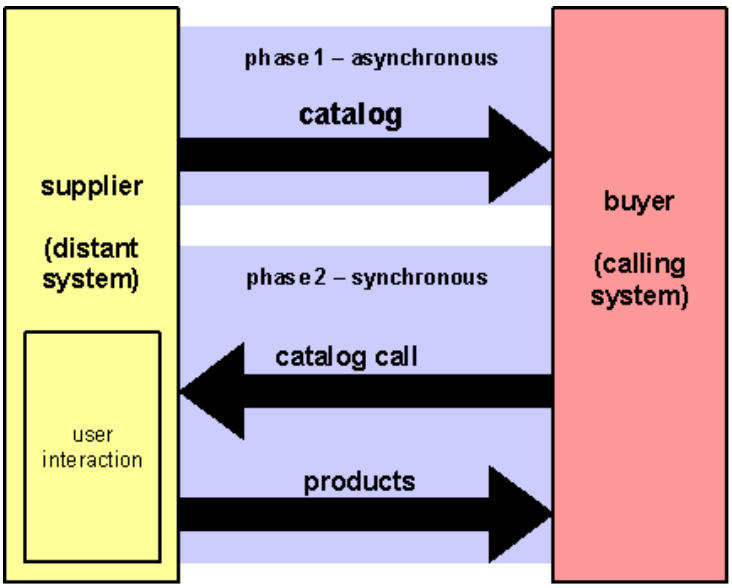

Figure IPP-1: Data exchange with the IPP application external catalog

IWith this IPP application, the catalog data can remain largely at the supplier's site. This application is most suitable for product whose administration would require high expenditures for the buyer (or in a market place system) respectively is not possible at all due to missing data. These are extensive, strongly changing assortments, permanently growing catalogs (e.g., literature) as well as complex products, whose configuration is only possible or desired via a configuration system administered by the supplier. Also the often close integration of the supplier's external catalog with the supplier's ERP system permits better catalog applications that can, for example, fall back on stock, delivery period, and customer-specific price data.

4.1.2 Product request

The IPP application product request is used for requesting product data from the remote system in order to support product search or to supplement, update or validate product data that already exists in the calling system. The request is created by an e-procurement system (respectively market place) administered by the buyer, and is sent to the supplier. Product requests can be initiated by end-users or they can run automatically in the background. The supplier replies to the request synchronously, so that the product data can be presented to the user in the calling system. The data exchange is shown in **Figure IPP-2**.

Copyright © 2022 BME e.V. - BMEcat® Version 2005.2
Copyright © 2010-2021 BME e.V. - BMEcat® Version 2005.1
Copyright © 2005-2009 BME e.V. - BMEcat® Version 2005
Copyright © 1998–2004 Fraunhofer IAO, Stuttgart; Universität Essen BLI - BMEcat® Version 1.2

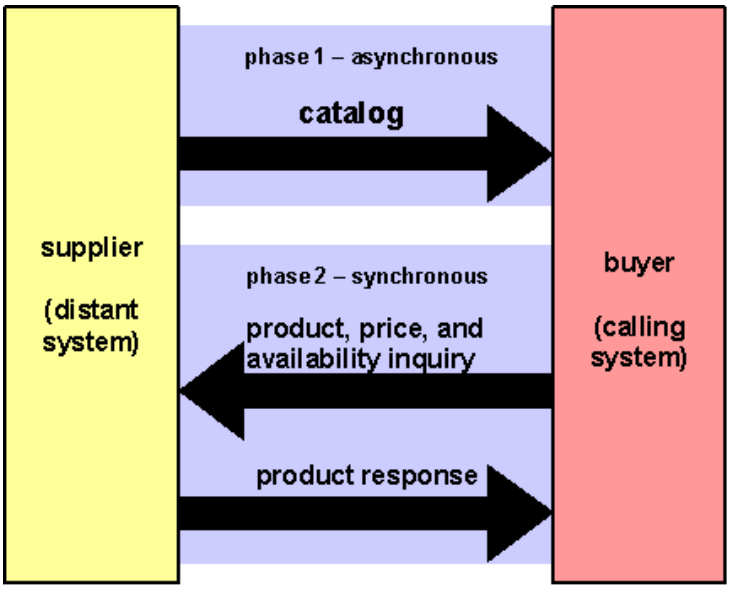

Figure IPP-2: Data exchange with the IPP application product request, price request, and availability request

4.1.3 Price request

The IPP application price request is used for requesting the current and often individual price for the respective buyer for one or several products from the supplier. The request is created by an e-procurement system (respectively market place) administered by the buyer, and is sent to the supplier. Typically price requests are initiated by end-users, who require the current price for a selected product or the current prices for the entire content of a shopping cart. The supplier replies to the request synchronously, so that the price information can be presented to the user in the calling system. The data exchange is shown in **Figure IPP-2**. The exchange formats used for implementing this process provide specific document types; in case of xCBL these are "PriceCheckRequest" and "PriceCheckResult".

The employment of the synchronous price request offers several application benefits:

- Also such products can be shown in electronic catalogs, whose prices are subject to changes (e.g., current market prices).
- It becomes possible to integrate customer-specific and current prices in the catalog applications beyond the price information contained in the catalog document, and thus to provide the buyer better information for making procurement decisions.
- For the reply to the price request, the supplier can use pricing rules that are stored in his ERP system. These rules go clearly beyond the possibilities of price modeling and price differentiation of conventional catalog-based procurement systems (and its respective catalog formats).
- Also the transfer of price information in catalogs can be completely omitted (phase 1), when this information is provided via synchronous communication (phase 2) in a dynamic way.

4.1.4 Availability request

The IPP application availability request is used for requesting the current and often individual availability information for one or several products. Availability means: if and under which restrictions are the products available, and thus deliverable by the supplier. Restrictions can cover price conditions, delivery periods, splitting the order size into partial deliveries, and the availability commitment degree.

The availability request is created by an e-procurement (respectively market place) administered by the buyer, and is sent to the supplier. Typically availability request are initiated by end-users, who require the current availability for a selected product or for the entire contents of a shopping cart. The supplier replies to the request synchronously, so that availability information can be presented to the user in the calling system. The data exchange is shown in **Figure IPP-2**. The exchange formats used for implementing this process provide specific document types; in case of xCBL these are "AvailabilityCheckRequest" and "AvailabilityCheckResult".

The employment of the synchronous availability request improves catalog-based sales and procurement processes as follows:

Copyright © 2022 BME e.V. - BMEcat® Version 2005.2
Copyright © 2010-2021 BME e.V. - BMEcat® Version 2005.1
Copyright © 2005-2009 BME e.V. - BMEcat® Version 2005
Copyright © 1998–2004 Fraunhofer IAO, Stuttgart; Universität Essen BLI - BMEcat® Version 1.2

- Now such products can be represented more suitable in catalogs, whose availability is subject to deviations, so that orders can hardly be processed on the assumptions of fixed prices, fixed delivery periods and total delivery.
- It becomes possible to integrate customer-specific and current availability information in the catalog applications beyond the restricted availability information that is usually contained in catalog, if any (e.g., planning delivery periods), and thus to provide the buyer better information for making procurement decisions.
- Also the transfer of availability information including price information in catalogs can be completely omitted (phase 1), when this information is provided via synchronous communication (phase 2) in a dynamic way.

4.1.5 Request for quotation

The IPP application request for quotation (RFQ) is used for transferring a RFQ specified in the calling system to the remote system; thus an offer generation process should be started in the remote system. A RFQ can refer to products contained in the respective BMEcat® catalog document or to any other product.

Different from the other IPP applications, the response to a RFQ does not take place synchronously, since the offer generation needs a longer time period, and this cannot be covered by a single user session. The data exchange is shown in **Figure IPP-3**. The exchange formats used for implementing the request for quotation process provide specific document types; in case of xCBL these are "RequestForQuotation" and "Quote", in case of openTRANS these are "RFQ" and "QUOTATION".

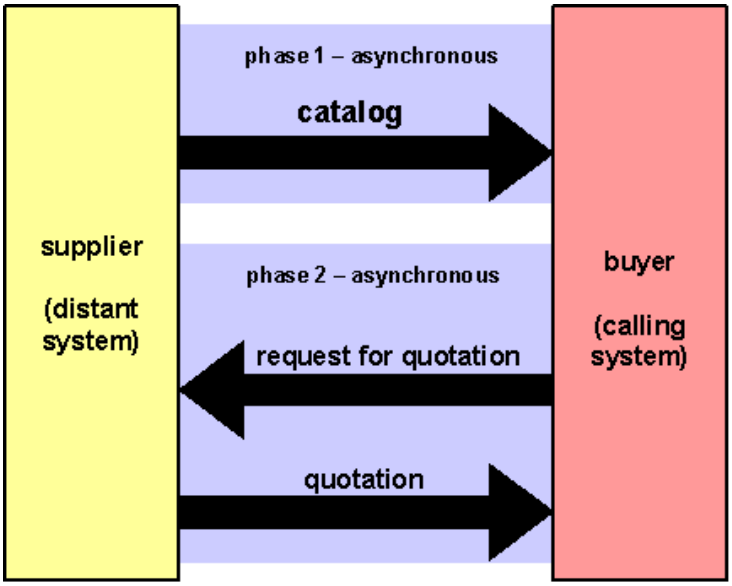

Figure IPP-3: Data exchange with the IPP application request for quotation

4.2 IPP operations

The IPP concept is outlined in such a way that very different processes can be described. For this purpose, for each IPP application so-called IPP operations, which indicate the form of usage of the IPP application, are available.

For example three IPP operations are assigned to the IPP application "external catalog":

- "create": This operation describes the calling-up of the external catalog; it is to be defined for all respective IPPs.
- "show": This operation shows a shopping basket on the exsternal system; therefore, it allows to call-up a product list that has been created prior. Such a catalog call is not used for searching for products in the supplier's system, but it addresses the order process (i.e., status check).

Copyright © 2022 BME e.V. - BMEcat® Version 2005.2
Copyright © 2010-2021 BME e.V. - BMEcat® Version 2005.1
Copyright © 2005-2009 BME e.V. - BMEcat® Version 2005
Copyright © 1998–2004 Fraunhofer IAO, Stuttgart; Universität Essen BLI - BMEcat® Version 1.2

- "recreate": This operation creates a copy of a previously created product list (or configured product) in the remote system; thus it supports repeating the same or similar purchases. The completion of this operation is formed by the re-transfer of the created and, if necessary, modified product list into the calling system.

The following table shows for each IPP application the allowed operations:

IPP applicaton	IPP operation	Explanation
External catalog	Selection and submittal (create)	Jumps to the external website of the IPP provider to build up a product list via user interaction (e.g., product search or product configuration)
	Display (show)	Shows a shopping basket on the external system (may include status information).
	Reselection and submittal (recreate)	Makes a copy of the (old) product list and creates from that a new changeble product list on the external website
Product request	Carry out (process)	Starts a product request for a list of products
Price request	Carry out (process)	Starts a price request for a list of products
Availability request	Carry out (process)	Starts an availability request for a list of products
Request for quotation	Carry out (process)	Starts a request for quotation for a list of products
	Display (show)	Shows the status of a started request for quotation on the external system

Table IPP-1: IPP applications and IPP operations

4.3 IPP information in the BMEcat® catalog document

4.3.1 Product-overlapping IPP information

The IPPs available for a catalog are to be defined in the BMEcat® catalog document. The **IPP_DEFINITION** element takes care of that in the product-overlapping data area. Each IPP represents an implementation of exactly one IPP application, i.e. for each different IPP application a single IPP has to be defined. Likewise a catalog can support several IPPs of the otherwise same IPP application, e.g., two different remote product configurators.

The IPP definition covers the following information:

- IPP identifier to be able to assign the IPP to one or several products on the product level.
- Indication of the IPP application (external catalog, price request, ...),
- Indication of the supported IPP operations,
- if necessary, naming of the IPP provider in the case of multi-supplier catalogs,
- if necessary, IPP description for representation in the target system.

For each IPP the supported IPP operations are to be described in detail (see **IPP_OPERATION**):

- Operation identifier to be able to assign the operation to one or several products on the product level,
- Indication of the IPP operation (create, recreate, show, process),
- Specification of the IPP calling-up, i.e. the outbound parameter for the remote system,
- Specification of the IPP resubmittal, i.e. the inbound parameter from the remote system,
- if necessary, description of the operation for representation in the target system.

4.3.2 IPP call-up specification

The specification of the IPP call-up takes place via the **IPP_OUTBOUND**element . The format used for the data exchange (**IPP_OUTBOUND_FORMAT**) as well as the calling address (**IPP_URI**) is to be indicated.

The IPP call-up itself takes place via the used exchange format. These exchange formats differ in the functionalities provided. The IPP operator can, however, already indicate in the BMEcat® catalog, in which way the exchange format has to be used concretely. The sub element **IPP_OUTBOUND_PARAMS** fulfills this role by taking over two tasks.

Copyright © 2022 BME e.V. - BMEcat® Version 2005.2
Copyright © 2010-2021 BME e.V. - BMEcat® Version 2005.1
Copyright © 2005-2009 BME e.V. - BMEcat® Version 2005
Copyright © 1998–2004 Fraunhofer IAO, Stuttgart; Universität Essen BLI - BMEcat® Version 1.2

On one hand, the capabilities of the remote system can be described, i.e.:

- supported languages of the user interface,
- supported currency for price data,
- supported price types,
- supported availability areas.

On the other hand, parameter values from the catalog can be submitted directly to the remote system, or their submittal can be specified in a binding way, inter alia:

- Product number
- Identification of a product configuration,
- Identification of a product list,
- Authentification data (login, password),
- User-defined parameters that extend the used exchange format (see **IPP_PARAM_DEFINITION**).

4.3.3 IPP-inbound specification

The IPP-inbound specification takes place via the **IPP_INBOUND** element. With this element, the IPP operator can describe which values the remote system can return. It depends mainly on the used exchange format (**IPP_INBOUND_FORMAT**), i.e. the indication of this format already gives information about the inbound parameters. In the BMEcat® catalog, if necessary, only the bilaterally agreed extensions of the underlying exchange format (**IPP_INBOUND_PARAMS**) can be described.

4.3.4 Product-related IPP information

The IPPs defined in the BMEcat® catalog are usable, when they are assigned to one or several products. This means for example that an IPP for price requires is not automatically applicable for all products of the catalog. The mapping takes place on the product level (**PRODUCT** in context T_NEW_CATALOG) in the container element (**PRODUCT_IPP_DETAILS**) via referencing both the IPP and its IPP operation. Besides that the following information can be indicated:

- product-specific values for outbound parameters previously defined in **IPP_PARAM_DEFINITION**
- product-specific calling address which replaces the general calling address
- product-specific response time which replaces the general respone time.

Apart from the allocation of IPPs to regular catalog products in the BMEcat® catalog, also dummy products that are intended for IPP applications exclusively can be entered. From these dummy products the call-up of the remote system takes place in the catalog system. For example, dummy products can be inserted for jumping to remote configuration systems; a further application case are "representations" for complete product assortments, which can only be accessed in the remote catalog. In all cases the entire BMEcat® vocabulary for describing these dummy products is at hand, i.e. names, texts, references, classification, features, multimedia information, product references etc. Therefore, the dummy products integrate themselves completely into the regular catalog; especially, they can be found via the same search functions, since they do not differ from the other products.

5 Price formulas

In addition to the transfer of fixed product prices, BMEcat® 2005 supports **dynamic price calculation**. Thus also such products can be described in catalogs whose prices cannot already be determined at the time of the catalog production, since they are subordinate to parameters that are to be provided for example by the purchaser (e.g., additional order parameters, product characteristics) or are provided by external sources (e.g., metal quotations at stock exchanges). For that purpose, BMEcat® 2005 introduces formulas which describe how the price is calculated on the basis of a term and its contained parameters. These formulas are defined in the transaction area (**FORMULAS**) and can be used on the product level in the context of price information (**PRODUCT_PRICE_DETAILS**). For instance, these price formulas can be used to represent metal surcharges.

5.1 Formula definition

Copyright © 2022 BME e.V. - BMEcat® Version 2005.2
Copyright © 2010-2021 BME e.V. - BMEcat® Version 2005.1
Copyright © 2005-2009 BME e.V. - BMEcat® Version 2005
Copyright © 1998–2004 Fraunhofer IAO, Stuttgart; Universität Essen BLI - BMEcat® Version 1.2

The formula definition takes place independently from a single product in the transaction area of the respective BMEcat® transaction. It is subdivided into (1) descriptive information about the formula, (2) the mathematical definition of the formula, and (3) the definition of the parameters used in the formula.

The identificator that is used for referencing the formula on the product level as well as optionally the formula name, the version number, the explanation text and the additional multimedia information are belonging to the descriptive information.

The mathematical definition (**FORMULA_FUNCTION**) of the formula takes place as a term (**TERM**) that sets parameters and numbers in relation via operators (i.e., basic arithmetic operators) and other mathematical functions (e.g., length).

The parameters used in a formula are to be defined (**PARAMETER_DEFINITIONS**) and are to be provided with an identifying parameter symbol, which is integrated into the mathematical definition for the parameter (e.g., EUR/USD for Euro/US-Dollar exchange rate).

For a detailed description of a parameter, the following can be indicated inter alia:

- Name (e.g., metal weight),
- Description (e.g., "The metal weight indicates the absolute portion of metals for the product."),
- Unit of measurement unit (e.g., kg)
- Classification information, in case the parameter refers to a product feature that is defined in a classification system,
- Parameter origin: the parameter value can be queried from an external data source, can be calculated via another formula, or can result from user input into the target system
- Default value, which is used as the assigned value.

5.2 Formula utilization

The price formulas defined in a BMEcat® catalog are actually used by assigning it to one or several products. This requirement signifies that a price formula does not apply automatically to all products of the catalog. The assignment takes place on the product level with the price information in the container element **PRODUCT_PRICE** by referencing the price formula (**PRICE_FORMULA**); in this case the otherwise customary price (**PRICE_AMOUNT**) may not be indicated any longer.

Besides the reference to the formula, product-specific values can be assigned to its price parameters (**PARAMETERS**); this assignment takes place by referencing the parameter via its symbol.

5.3 Example: metal surcharges

The example shows the usage of price formulas for metals surcharges in the cable industry. Further examples can be found in the element **FORMULA**. The table below lists the relevant parameters for metal surcharges:

Parameter name (per metal) **PARAMETER_ NAME**	Symbol **PARAMETER_ SYMBOL**	Description **PARAMETER_ DESCR**	Unit **PARAMETER_ UNIT**	Description **PARAMETER_ DESCR**	Default value **PARAMETER_ DEFAULT_ VALUE**
Basic price	P	Basic price of the product without metal surcharges	EUR	Fixed parameter	none – is set on the product level
Basic metal $value_{metal}$	$MBW_{metal\ code}$ e.g., MBWAL	€ amount of the metal per 100kg already included in the price	EUR/100kg	Fixed parameter	e.g., 200 for AL
Metal $weight_{metal}$	$MG_{metal\ code}$ e.g., MGAL	Weight of the metal in the product	kg	Fixed parameter	none – is set on the product level
Metal $quotation_{metal}$	$MN_{metal\ code}$ e.g., MNAL	Quotation of the metal at the stock exchange	EUR	Parameter is queried via the internet **PARAMETER_ ORIGIN -->type =uri**	none

Table FORMULAS-1: Definition of parameters for metal surcharges (Example)

Copyright © 2022 BME e.V. - BMEcat® Version 2005.2
Copyright © 2010-2021 BME e.V. - BMEcat® Version 2005.1
Copyright © 2005-2009 BME e.V. - BMEcat® Version 2005
Copyright © 1998–2004 Fraunhofer IAO, Stuttgart; Universität Essen BLI - BMEcat® Version 1.2

If the parameters for the metals aluminium (AL) and copper (CU) are used in the price formula, the following formula has to be defined (independently from a specific product):

```
PRICE_AMOUNT = P + (MNCU-MBWCU)*MGCU/100 + (MNAL-MBWAL)*MGAL/100
```

In order to represent this formula, it has to be defined with the element **FORMULA** as part of the formula dictionary (**T_NEW_CATALOG** -> **FORMULAS**). This element contains besides sub elements, which define the actual formula function (**FORMULA_FUNCTION**) and the list of its parameters, further elements describing the formula. The following example shows the represenation of the formula introduced above. The ranges left blank by "..." are explained further down.

```
<FORMULA>
    <FORMULA_ID>MZCUAL</FORMULA_ID>
    <FORMULA_NAME>Formula for metal surcharges for copper and aluminium</FORMULA_NAME>
    <FORMULA_SOURCE>
        <SOURCE_DESCR>Published by the professional association XYZ</SOURCE_DESCR>
        <SOURCE_URI>http://www.xyz.org/bmecat_forms</SOURCE_URI>
        <PARTY_IDREF type="supplier_specific">F242342</PARTY_IDREF>
    </FORMULA_SOURCE>
    <FORMULA_FUNCTION>
         ...
    </FORMULA_FUNCTION>
    <PARAMETER_DEFINITIONS>
         ...
    </PARAMETER_DEFINITIONS>
</FORMULA>
```

The actual formula function is specified by the element **FORMULA_FUNCTION**. Since it does not contain any requirements for the use of the formula, a calculation term (**TERM -->type =function**) is sufficient, in which also no **TERM_CONDITION** element has to appear. The arithmetic function is indicated in the element **TERM_EXPRESSION**.

```
<FORMULA_FUNCTION>
    <TERM type="function">
        <TERM_ID>1</TERM_ID>
        <TERM_EXPRESSION>P+(MNCU-MBWCU)*MGCU/100+(MNAL-MBWAL)*MGAL/100</TERM_EXPRESSION>
    </TERM>
</FORMULA_FUNCTION>
```

The parameters **PARAMETER_DEFINITION** used in the formula are described as follows. Concerning fixed values, the **PARAMETER_ORIGIN** element may not be used, concerning all other values it has to be indicated, e.g., parameter "MNCU". The **PARAMETER_ORIGIN** element and its attribute "**type**" set to "**uri**" says that the value is requested from the respective internet address.

```
<PARAMETER_DEFINITIONS>
    <PARAMETER_DEFINITION>
        <PARAMETER_SYMBOL>P</PARAMETER_SYMBOL>
        <PARAMETER_BASICS>
            <PARAMETER_NAME>basic price</PARAMETER_NAME>
            <PARAMETER_DESCR>basic product price without metal surcharges</PARAMETER_DESCR>
            <PARAMETER_UNIT>EUR</PARAMETER_UNIT>
        </PARAMETER_BASICS>
        <PARAMETER_ORDER>1</PARAMETER_ORDER>
    </PARAMETER_DEFINITION>
    <PARAMETER_DEFINITION>
        <PARAMETER_SYMBOL>MBWCU</PARAMETER_SYMBOL>
        <PARAMETER_BASICS>
            <PARAMETER_NAME>Basic metal value copper</PARAMETER_NAME>
            <PARAMETER_UNIT>kg</PARAMETER_UNIT>
        </PARAMETER_BASICS>
        <PARAMETER_DEFAULT_VALUE>300</PARAMETER_DEFAULT_VALUE>
        <PARAMETER_ORDER>21</PARAMETER_ORDER>
    </PARAMETER_DEFINITION>
    <PARAMETER_DEFINITION>
        <PARAMETER_SYMBOL>MBWAL</PARAMETER_SYMBOL>
```

Copyright © 2022 BME e.V. - BMEcat® Version 2005.2
Copyright © 2010-2021 BME e.V. - BMEcat® Version 2005.1
Copyright © 2005-2009 BME e.V. - BMEcat® Version 2005
Copyright © 1998–2004 Fraunhofer IAO, Stuttgart; Universität Essen BLI - BMEcat® Version 1.2

```
        <PARAMETER_BASICS>
            <PARAMETER_NAME>Basic metal value aluminium</PARAMETER_NAME>
            <PARAMETER_UNIT>kg</PARAMETER_UNIT>
        </PARAMETER_BASICS>
        <PARAMETER_DEFAULT_VALUE>200</PARAMETER_DEFAULT_VALUE>
        <PARAMETER_ORDER>31</PARAMETER_ORDER>
    </PARAMETER_DEFINITION>
    <PARAMETER_DEFINITION>
        <PARAMETER_SYMBOL>MGCU</PARAMETER_SYMBOL>
        <PARAMETER_BASICS>
            <PARAMETER_NAME>metal weight copper</PARAMETER_NAME>
            <PARAMETER_UNIT>kg</PARAMETER_UNIT>
        </PARAMETER_BASICS>
        <PARAMETER_ORDER>22</PARAMETER_ORDER>
    </PARAMETER_DEFINITION>
    <PARAMETER_DEFINITION>
        <PARAMETER_SYMBOL>MGAL</PARAMETER_SYMBOL>
        <PARAMETER_BASICS>
            <PARAMETER_NAME>metal weight aluminium</PARAMETER_NAME>
            <PARAMETER_UNIT>kg</PARAMETER_UNIT>
        </PARAMETER_BASICS>
        <PARAMETER_ORDER>32</PARAMETER_ORDER>
    </PARAMETER_DEFINITION>
    <PARAMETER_DEFINITION>
        <PARAMETER_SYMBOL>MNCU</PARAMETER_SYMBOL>
        <PARAMETER_BASICS>
            <PARAMETER_NAME>metal quotation copper</PARAMETER_NAME>
            <PARAMETER_UNIT>EUR/kg</PARAMETER_UNIT>
        </PARAMETER_BASICS>
        <PARAMETER_ORIGIN type="uri">http://ecommerce.xyz.org/mncu</PARAMETER_ORIGIN>
        <PARAMETER_ORDER>20</PARAMETER_ORDER>
    </PARAMETER_DEFINITION>
    <PARAMETER_DEFINITION>
        <PARAMETER_SYMBOL>MNAL</PARAMETER_SYMBOL>
        <PARAMETER_BASICS>
            <PARAMETER_NAME>metal quotation aluminium</PARAMETER_NAME>
            <PARAMETER_UNIT>EUR/kg</PARAMETER_UNIT>
        </PARAMETER_BASICS>
        <PARAMETER_ORIGIN type="uri">http://ecommerce.xyz.org/mnal</PARAMETER_ORIGIN>
        <PARAMETER_ORDER>30</PARAMETER_ORDER>
    </PARAMETER_DEFINITION>
</PARAMETER_DEFINITIONS>
```

According to the formula definition in the formula dictionary, the price formula can be used on the product level. There it is an alternative to the static price by the **PRICE_AMOUNT** element. The reference to the formula is stored in the **FORMULA_IDREF** element. In addition, **PARAMETER** elements can used for assigning product-specific values to parameters.

```
<PRODUCT_PRICE price_type="net_list">
    <PRICE_FORMULA>
        <FORMULA_IDREF>MZCUAL</FORMULA_IDREF>
        <PARAMETERS>
            <PARAMETER>
                <PARAMETER_SYMBOLREF>P</PARAMETER_SYMBOLREF>
                <PARAMETER_VALUE>15.5</PARAMETER_VALUE>
            </PARAMETER>
            <PARAMETER>
                <PARAMETER_SYMBOLREF>MGCU</PARAMETER_SYMBOLREF>
                <PARAMETER_VALUE>.5</PARAMETER_VALUE>
            </PARAMETER>
            <PARAMETER>
                <PARAMETER_SYMBOLREF>MGAL</PARAMETER_SYMBOLREF>
                <PARAMETER_VALUE>0</PARAMETER_VALUE>
            </PARAMETER>
        </PARAMETERS>
    </PRICE_FORMULA>
    <PRICE_CURRENCY>EUR</PRICE_CURRENCY>
    <TAX>.16</TAX>
</PRODUCT_PRICE>
```

6 Product configuration

Copyright © 2022 BME e.V. - BMEcat® Version 2005.2
Copyright © 2010-2021 BME e.V. - BMEcat® Version 2005.1
Copyright © 2005-2009 BME e.V. - BMEcat® Version 2005
Copyright © 1998–2004 Fraunhofer IAO, Stuttgart; Universität Essen BLI - BMEcat® Version 1.2

In BMEcat® 2005 the product model has been extended to be able to describe configurable products. The new **PRODUCT_CONFIG_DETAILS** element takes care of this. In BMEcat® 1.2, only feature-based variants of a base product could be described; all variants were required to have the same price. These restrictions do not exist any longer: The product configuration can take place both feature-based as well as component-based, or in a combined way. Now it can be described in detail, in which order and under which rules the configuration is to be processed and in which way the product price and the order number respectively configuration code are created.

The description of the product configuration takes place via one or several configuration steps (**CONFIG_STEP**). In case of the feature-based configuration, each feature, which has to be filled with a value, leads to such a configuration step. In case of the component-based configuration, each component is represented by a configuration step.

At least one configuration step has to be defined (e.g., a single variant feature, or component). Besides that, it is possible to define one or several default configurations (**PREDEFINED_CONFIG**), i.e. in order to show particularly current variants already in the catalog, without the user having to complete configuration steps beforehand. Furthermore configuration rules can be defined (**CONFIG_RULES**), which reduce the variant space to the permissible variants, or describe interdependences between configuration steps. Finally, configuration formulas (**CONFIG_FORMULAS**) take care of the automatic deduction of product characteristics.

6.1 Configuration steps

A configuration step represents a completed action within itself, which the user in the course of the configuration process has to complete, in order to finally arrive at a permissible configuration, which can be ordered via the determined order number or the created configuration code. The definition is made by the container element **CONFIG_STEP**, which contains inter alia the following information:

- Identificator, in order to be able to refer to the step in the configuration rules,
- Description, which is presented to the user in the target system; it is subdivided in heading, short description and long description,
- Detailed information on the feature (**CONFIG_FEATURE**) or component (**CONFIG_PARTS**), which is determined by the configuration step,
- Number of the feature values respectively components, which have to be or may be selected by the user,
- Order of the step in the entire configuration process,
- Addition to order number, which is attached to the product number,
- Price, which is added to the base price of the product.

6.2 Feature-based configuration

In case of the feature-based configuration, the user fills a feature with a value (e.g., width and length of cuts). Usually the permissible values are subject to pre-defined restrictions, be it by numeric intervals or a value list, from which a value has to be selected (enumerations).

The respective feature (**CONFIG_FEATURE**) has to be defined either completely or a pre-defined feature given by a feature system respectively classification system can be referenced (given in the same BMEcat® catalog document in the **CLASSIFICATION_SYSTEM** element. The feature definition can get very detailed and extensive, in order to supply the user in the target system with detailed information for the value selection. Inter alia the following can be indicated:

- Feature name, short name, and description,
- Identificator and version,
- Feature group (e.g., "measurement" for feature "length"),
- Value range.

The value range depends on the data type: Thus an interval can be indicated for numeric data types, the minimum and maximum length for character strings, and a value list for enumerations. Further information may be:

- Feature symbol (e.g., a formula symbol),
- Illustration (e.g., graphic with emphasis on the measure, which represents the feature),
- Source (e.g., reference to standard).

Copyright © 2022 BME e.V. - BMEcat® Version 2005.2
Copyright © 2010-2021 BME e.V. - BMEcat® Version 2005.1
Copyright © 2005-2009 BME e.V. - BMEcat® Version 2005
Copyright © 1998–2004 Fraunhofer IAO, Stuttgart; Universität Essen BLI - BMEcat® Version 1.2

6.3 Component-based configuration

In case of the component-based configuration, one or several components are selected by the user (e.g., CPU for basic product PC mainboard). Usually the permissible components are subject to pre-defined restrictions, be it by a fixed list of components or by definition subordinations administered by the user in other configuration steps.

The available components have to be defined in the **CONFIG_PARTS** element. Here also the case has to be considered that several components can be selected by the user at the same time (e.g., memory slots of a PC mainboard). The components have to be products (**PRODUCT** in context T_NEW_CATALOG) in the same BMEcat® catalog document, and they are allocated to the configuration step via their product number.

6.4 Calculation of the order number (configuration code)

The configuration code is the basis for ordering the configured product. It is formed by the product number (**SUPPLIER_PID**) as well as the user input of all configuration steps in codified form. Whether the target system processes the configuration code completely as order number or processes the product number and the configuration information separately, is not specified by the BMEcat® format and depends substantially on how the order is transferred to the supplier.

The configuration code starts with the product number (**SUPPLIER_PID**). Eventually, all configuration steps are codified successively. Each configuration step starts with its **CONFIG_CODE**. Afterwards depending upon cardinality (**MIN_OCCURANCE** / **MAX_OCCURANCE**) the entered characteristics are codified. If it is a component-based configuration step the respective code (**CONFIG_CODE**) of the selected component (**PART_ALTERNATIVE**) is attached, or if it is empty, the product number (**SUPPLIER_PID**) of the component is attached. If it is a feature-based configuration step, the selected value of the feature is codified. For a selected value (**FT_VALUE**) again its **CONFIG_CODE** is attached. All other values (numeric values, symbol series) are indicated in quotation marks (").

A configuration code is thus structured for example as follows (the & symbols only in this case take care of the optical separation; the different codifications are indicated one after the other without separators or blanks):

$CONFIG\_CODE_{step1}$ & $SUPPLIER\_PID_{component1}$ & $SUPPLIER\_PID_{component2}$ & $CONFIG\_CODE_{step2}$ & $CONFIG\_CODE_{selectedfeature1}$ & $CONFIG\_CODE_{step3}$ & "3.54"

The following figure shows the structure of the configuration code.

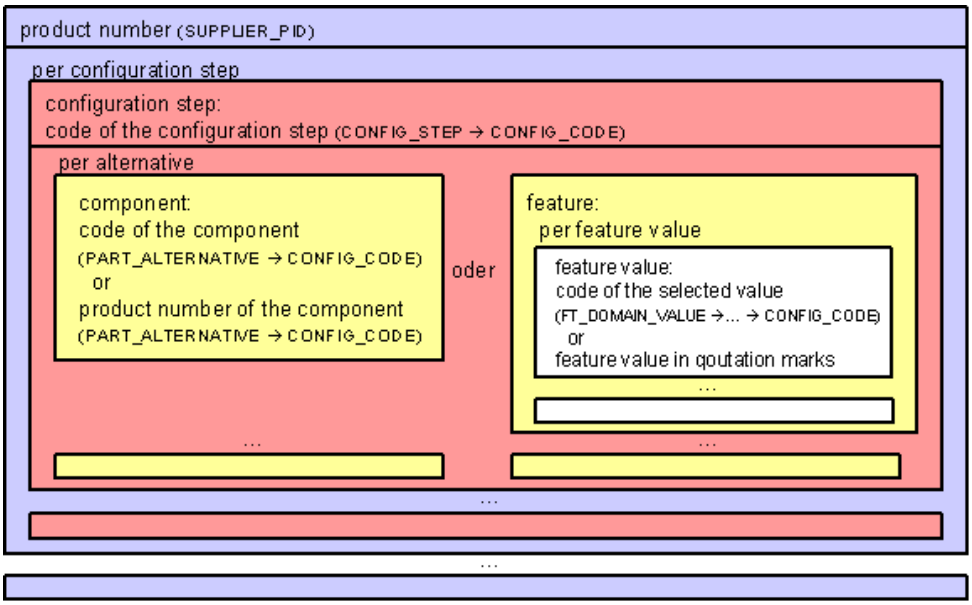

Figure CONFIG-1: Structure of the configuration code

Copyright © 2022 BME e.V. - BMEcat® Version 2005.2
Copyright © 2010-2021 BME e.V. - BMEcat® Version 2005.1
Copyright © 2005-2009 BME e.V. - BMEcat® Version 2005
Copyright © 1998–2004 Fraunhofer IAO, Stuttgart; Universität Essen BLI - BMEcat® Version 1.2

In case pre-defined configurations (**PREDEFINED_CONFIG**) are used, also proper product numbers can be assigned to them directly (also see chapter **Pre-defined configurations**).

6.5 Price calculation

The determination of the price of a configurable product can take place in three different ways:

1. If the basic price (**PRODUCT** -> **PRODUCT_PRICE_DETAILS**) is indicated via the element **PRICE_AMOUNT**, the calculation of the final price is made by summarizing the basic price and all partial prices of the configuration. This procedure is similar to determining the order number.

   The procedure starts with the basic price of the product (**PRODUCT** -> ... -> **PRICE_AMOUNT**), to which subsequently the price of each configuration step is added. The price of a configuration step is composed of its basic price (**PRODUCT** -> **PRODUCT_PRICE_DETAILS**) as well as the prices of all selected/ entered alternatives depending upon cardinality (**MIN_OCCURANCE** / **MAX_OCCURANCE**). If it is a component-based configuration step, in each case the price of the component (**PART_ALTERNATIVE** -> **PRODUCT_PRICE_DETAILS**) is added. If it is a feature-based configuration step, the prices of all selected selection features (**FT_VALUE** -> **CONFIG_INFO** -> **PRODUCT_PRICE_DETAILS**) are added. All other values (numeric values, symbol series) can be allocated to individual prices only via price formulas as described in the next section.
2. If the basic price (**PRODUCT** -> **PRODUCT_PRICE_DETAILS**) is indicated via the element **PRICE_FORMULA**, the calculation of the final price takes place within the formula. The reference is made via the **CONFIG_CODE**s in the different levels (also see **example 2 concerning the element PRODUCT_PRICE_DETAILS**) onto the (partial) results of the configuration in the price formula.
3. If pre-defined configurations (**PREDEFINED_CONFIG**) are used, they can be provided with individual prices. These prices then replace the prices, which are indicated via the two methods described above (also see chapter **Pre-defined configurations**).

If the price of a configuration is determined via the basic price of the product (option 1 or option 2) and not via pre-defined configurations, it is multiplied subsequently with the price factor of the product (**PRODUCT** -> ... -> **PRICE_FACTOR**), in order to calculate the total price.

The total price of a configurable product is thus for example calculated as follows (option 1):

Total price = (basic $price_{step1}$+$price_{component1}$+$price_{component2}$ + basic $price_{step2}$+$price_{selectionfeature1}$) * price factor

6.6 Pre-defined configurations

The element **PREDEFINED_CONFIGS** can be used in order to provide the user with configurations pre-defined by the catalog creator. Thus they define default configurations, which the user can select immediately, without travelling through the individual configuration steps. The selection is facilitated for the user by the fact that the pre-defined configuration can be given a name, and that it can additionally be described by an explanation.

Pre-defined configurations can also possess specific prices or product numbers. These then replace all indications made in other places in this connection. The price information under **PRODUCT** -> **PRODUCT_PRICE_DETAILS** (incl. price factor) is then ignored. The order of the pre-defined configuration should be made via the indicated product number (**PREDEFINED_CONFIG** -> **SUPPLIER_PID**) and not via the configuration code.

Since the pre-defined configuration is identified via a complete configuration code, target systems should usually be able to display the list of all selections respectively entries concerning a pre-defined configuration. This is, however, only possible, if the configuration codes are structured in such a way that a redismantling free of doubts is possible.

If all permissible configurations are indicated via **PREDEFINED_CONFIG** elements, this can be specified additionally by the value "**full**" in the element **PREDEFINED_CONFIG_COVERAGE**. In this way, configurations can be restricted without defining configuration rules (**CONFIG_RULES**).

6.7 Configuration rules

Copyright © 2022 BME e.V. - BMEcat® Version 2005.2
Copyright © 2010-2021 BME e.V. - BMEcat® Version 2005.1
Copyright © 2005-2009 BME e.V. - BMEcat® Version 2005
Copyright © 1998–2004 Fraunhofer IAO, Stuttgart; Universität Essen BLI - BMEcat® Version 1.2

If a configuration comprises several configuration steps, interrelations between the entries of the different steps can exist. In order to identify, which configurations are valid, configuration rules (**CONFIG_RULES**) can be used. A rule **TERM** consists thereby of a condition (**TERM_CONDITION**) and an indication "correct" or "incorrect" in the expression of the term (**TERM_EXPRESSION**). In order to facilitate the examination of the validity, all rules within a configuration have to contain “correct" expressions for the restriction of the configuration, or all rules have to contain "wrong" expressions. A mixture of "correct" and "incorrect" expressions is not allowed.

If the value in the expression is "true", the rule indicates that a product configuration in connection with this rule is valid, if the condition of the rule is "correct". If all rules are valid, also the configured product is valid.

If the value in the expression is "false", the rule indicates that a product configuration is invalid, if the condition of the rule is "correct". In case of a correctly configured product, in not even one of such rules the condition section may be “correct”.

The following table shows two examples of rules for the restriction of permissible configurations. These rules are not formally indicated, since they only illustrate the basic principle:

Rule identification **TERM_ID**	Condition **TERM_CONDITION**	Expression **TERM_EXPRESSION**
In the following example it is to be determined for a crayon, which is available in 4 colours and 4 line widths, that the extra-fine crayons are only available in black (also see **example 1 concerning configuration rules**).		
CRAYON1	crayon="extra-fine" AND NOT(crayon="black")	false
In the following example a rectangular wooden plate is only correctly configured, if its edge length does not exceed 5m and if it is at the most 20m² large (also see **example 2 concerning configuration rules**).		
PLATE1	width < 5	true
PLATE2	length < 5	true
PLATE3	(width * length) <= 20	true

Table CONFIG-1: Configuration rules (Examples)

Refer to the element **TERM** for details on the formal structure of the rules.

6.8 Configuration formulas

Within a configuration it can happen that values for features or BMEcat® elements can only be calculated based on user entries during the configuration. For this purpose configuration formulas (**CONFIG_FORMULA**) can be used analogous to price formulas (**PRICE_FORMULA**).

Circumstances permitting, a calculation formula consists of several terms (**TERM**). The expression of the term (**TERM_EXPRESSION**) is applied for the calculation, if the condition in the field **TERM_CONDITION** is true.

The following table shows two examples of formulas for configuration purposes. These formulas are not formally indicated, since they are to describe only the principle:

Term identification **TERM_ID**	Condition **TERM_CONDITION**	Expression **TERM_EXPRESSION**
In the following example the total weight for a wooden plate is to be calculated (also see **example 1 concerning functions of the formulas**).		
PLATE1	true (or omit element)	weight = length * width * 0.3
In the following example the delivery period of the configured product depends on the selected alternative (also see **example 2 concerning functions of the formulas**).		
TERM1	alternative = A1	delivery period = 4
TERM2	alternative = A2	delivery period = 10
TERM3	alternative = A3	delivery period = 14

Table CONFIG-2: Configuration formulas (Examples)

Refer to the element **FORMULA** for details of the formal structure of the calculation formulas.

Copyright © 2022 BME e.V. - BMEcat® Version 2005.2
Copyright © 2010-2021 BME e.V. - BMEcat® Version 2005.1
Copyright © 2005-2009 BME e.V. - BMEcat® Version 2005
Copyright © 1998–2004 Fraunhofer IAO, Stuttgart; Universität Essen BLI - BMEcat® Version 1.2

6.9 Example: Laptop configuration

In the following example a laptop is specified. The configuration consists of three configuration steps (**CONFIG_STEP**) in which the user can select the hard disk, components for the expansion slots as well as an additional bag. The user has the option to omit the configuration steps and to select a pre-defined configuration (**PREDEFINED_CONFIG**). The configuration is valid for all combinations of the three options; therefore no configuration rules (**CONFIG_RULES**) have to be defined.

```
<PRODUCT_CONFIG_DETAILS>
    <CONFIG_STEP>
        ...
    </CONFIG_STEP>
    <CONFIG_STEP>
        ...
    </CONFIG_STEP>
    <CONFIG_STEP>
        ...
    </CONFIG_STEP>
    <PREDEFINED_CONFIGS>
        ...
    </PREDEFINED_CONFIGS>
</PRODUCT_CONFIG_DETAILS>
```

The first configuration step is a component-based one. The hard disk can be selected out of four different models (**PART_ALTERNATIVE**). These components refer to products via the **SUPPLIER_PID**, which are specified in another place in the catalog. Since at least (**MIN_OCCURANCE**) one and at the most (**MAX_OCCURANCE**) one component can be selected, exactly one component has to be determined. The user is free to decide whether he wants to skip this configuration step (**STEP_INTERACTION_TYPE =take_default**) and accept the default selection (**DEFAULT_FLAG** = "true"). Different surcharges are allocated to the components via **PRODUCT_PRICE_DETAILS** elements.

```
<CONFIG_STEP>
    <STEP_ID>STEP1</STEP_ID>
    <STEP_HEADER>Integrated hard disk</STEP_HEADER>
    <STEP_DESCR_SHORT>We recommend a Furious CD 12.</STEP_DESCR_SHORT>
    <STEP_INTERACTION_TYPE>take_default</STEP_INTERACTION_TYPE>
    <CONFIG_CODE>-HDD</CONFIG_CODE>
    <CONFIG_PARTS>
        <PART_ALTERNATIVE>
            <SUPPLIER_PIDREF>ADGDG55555</SUPPLIER_PIDREF>
            <DEFAULT_FLAG>true</DEFAULT_FLAG>
        </PART_ALTERNATIVE>
        <PART_ALTERNATIVE>
            <SUPPLIER_PIDREF>ADGDG23452</SUPPLIER_PIDREF>
            <PRODUCT_PRICE_DETAILS>
                <PRODUCT_PRICE price_type="net_list">
                    <PRICE_AMOUNT>100</PRICE_AMOUNT>
                    <PRICE_CURRENCY>EUR</PRICE_CURRENCY>
                    <TAX>.16</TAX>
                </PRODUCT_PRICE>
            </PRODUCT_PRICE_DETAILS>
        </PART_ALTERNATIVE>
        <PART_ALTERNATIVE>
            <SUPPLIER_PIDREF>XDD1000</SUPPLIER_PIDREF>
            <PRODUCT_PRICE_DETAILS>
                <PRODUCT_PRICE price_type="net_list">
                    <PRICE_AMOUNT>200</PRICE_AMOUNT>
                    <PRICE_CURRENCY>EUR</PRICE_CURRENCY>
                    <TAX>.16</TAX>
                </PRODUCT_PRICE>
            </PRODUCT_PRICE_DETAILS>
        </PART_ALTERNATIVE>
        <PART_ALTERNATIVE>
            <SUPPLIER_PIDREF>XXX666</SUPPLIER_PIDREF>
            <PRODUCT_PRICE_DETAILS>
                <PRODUCT_PRICE price_type="net_list">
```

Copyright © 2022 BME e.V. - BMEcat® Version 2005.2
Copyright © 2010-2021 BME e.V. - BMEcat® Version 2005.1
Copyright © 2005-2009 BME e.V. - BMEcat® Version 2005
Copyright © 1998–2004 Fraunhofer IAO, Stuttgart; Universität Essen BLI - BMEcat® Version 1.2

```
                    <PRICE_AMOUNT>999.99</PRICE_AMOUNT>
                    <PRICE_CURRENCY>EUR</PRICE_CURRENCY>
                    <TAX>.16</TAX>
                </PRODUCT_PRICE>
            </PRODUCT_PRICE_DETAILS>
        </PART_ALTERNATIVE>
    </CONFIG_PARTS>
    <MIN_OCCURANCE>1</MIN_OCCURANCE>
    <MAX_OCCURANCE>1</MAX_OCCURANCE>
</CONFIG_STEP>
```

In the second configuration step at least two products (**MIN_OCCURANCE** = 2) have to be selected for the two expansion slots. Since the element **STEP_INTERACTION_TYPE** is not indicated with the value "**take_default**", the configuration is mandatory. The **PART_SELECTION_TYPE =distinct** element specifies that no component may be selected more than once.

```
<CONFIG_STEP>
    <STEP_ID>STEP32</STEP_ID>
    <STEP_HEADER>slide-in units</STEP_HEADER>
    <STEP_DESCR_SHORT>Please select at least 2 components</STEP_DESCR_SHORT>
    <CONFIG_CODE>-POR</CONFIG_CODE>
    <CONFIG_PARTS>
        <PART_ALTERNATIVE>
            <SUPPLIER_PIDREF>ACCU112</SUPPLIER_PIDREF>
            <DEFAULT_FLAG>true</DEFAULT_FLAG>
        </PART_ALTERNATIVE>
        <PART_ALTERNATIVE>
            <SUPPLIER_PIDREF>DVD121</SUPPLIER_PIDREF>
            <PRODUCT_PRICE_DETAILS>
                <PRODUCT_PRICE price_type="net_list">
                    <PRICE_AMOUNT>110</PRICE_AMOUNT>
                    <PRICE_CURRENCY>EUR</PRICE_CURRENCY>
                    <TAX>.16</TAX>
                </PRODUCT_PRICE>
            </PRODUCT_PRICE_DETAILS>
        </PART_ALTERNATIVE>
        <PART_ALTERNATIVE>
            <SUPPLIER_PIDREF>DVDRW1</SUPPLIER_PIDREF>
            <PRODUCT_PRICE_DETAILS>
                <PRODUCT_PRICE price_type="net_list">
                    <PRICE_AMOUNT>210</PRICE_AMOUNT>
                    <PRICE_CURRENCY>EUR</PRICE_CURRENCY>
                    <TAX>.16</TAX>
                </PRODUCT_PRICE>
            </PRODUCT_PRICE_DETAILS>
        </PART_ALTERNATIVE>
        <PART_ALTERNATIVE>
            <SUPPLIER_PIDREF>CD121</SUPPLIER_PIDREF>
            <DEFAULT_FLAG>true</DEFAULT_FLAG>
        </PART_ALTERNATIVE>
        <PART_ALTERNATIVE>
            <SUPPLIER_PIDREF>CDRW</SUPPLIER_PIDREF>
            <PRODUCT_PRICE_DETAILS>
                <PRODUCT_PRICE price_type="net_list">
                    <PRICE_AMOUNT>80</PRICE_AMOUNT>
                    <PRICE_CURRENCY>EUR</PRICE_CURRENCY>
                    <TAX>.16</TAX>
                </PRODUCT_PRICE>
            </PRODUCT_PRICE_DETAILS>
        </PART_ALTERNATIVE>
        <PART_SELECTION_TYPE>distinct</PART_SELECTION_TYPE>
    </CONFIG_PARTS>
    <MIN_OCCURANCE>2</MIN_OCCURANCE>
    <MAX_OCCURANCE>5</MAX_OCCURANCE>
</CONFIG_STEP>
```

The last configuration step permits the optional selection of an additional laptop bag. Since the bag is defined as a single product in the catalog, the configuration step is specified as feature-based. The feature is defined in the **CLASSIFICATION_SYSTEM_FEATURE_TEMPLATE** element, which contains two selection values

Copyright © 2022 BME e.V. - BMEcat® Version 2005.2
Copyright © 2010-2021 BME e.V. - BMEcat® Version 2005.1
Copyright © 2005-2009 BME e.V. - BMEcat® Version 2005
Copyright © 1998–2004 Fraunhofer IAO, Stuttgart; Universität Essen BLI - BMEcat® Version 1.2

(**FT_VALUE**) for a red and a black bag. Besides the text each selection value contains a surcharge which adds to the total product price as well as a configuration code (**CONFIG_CODE**) for the formation of the order code.

```
<CONFIG_STEP>
    <STEP_ID>STEP11</STEP_ID>
    <STEP_HEADER>Bag</STEP_HEADER>
    <STEP_DESCR_SHORT>Would you like to order a bag in addition? This bag cannot be ordered
independently!</STEP_DESCR_SHORT>
    <STEP_INTERACTION_TYPE>force_userinput</STEP_INTERACTION_TYPE>
    <CONFIG_CODE>-BAG</CONFIG_CODE>
    <CONFIG_FEATURE>
        <CLASSIFICATION_SYSTEM_FEATURE_TEMPLATE>
            <FT_ID>31231</FT_ID>
            <FT_NAME>without any relevance</FT_NAME>
            <FEATURE_CONTENT>
                <FT_DATATYPE>string</FT_DATATYPE>
                <FT_VALUES>
                    <FT_VALUE>
                        <VALUE_TEXT>bag black</VALUE_TEXT>
                        <MIME_INFO>
                            <MIME>
                                <MIME_SOURCE>blackbag.jpg</MIME_SOURCE>
                            </MIME>
                        </MIME_INFO>
                        <CONFIG_INFO>
                            <CONFIG_CODE>09</CONFIG_CODE>
                            <PRODUCT_PRICE_DETAILS>
                                <PRODUCT_PRICE price_type="net_list">
                                <PRICE_AMOUNT>50.29</PRICE_AMOUNT>
                                <PRICE_CURRENCY>EUR</PRICE_CURRENCY>
                                <TAX>.16</TAX>
                                </PRODUCT_PRICE>
                            </PRODUCT_PRICE_DETAILS>
                        </CONFIG_INFO>
                        <VALUE_ORDER>1</VALUE_ORDER>
                        <DEFAULT_FLAG>true</DEFAULT_FLAG>
                    </FT_VALUE>
                    <FT_VALUE>
                        <VALUE_TEXT>bag red</VALUE_TEXT>
                        <MIME_INFO>
                            <MIME>
                                <MIME_SOURCE>redbag.jpg</MIME_SOURCE>
                            </MIME>
                        </MIME_INFO>
                        <CONFIG_INFO>
                            <CONFIG_CODE>49</CONFIG_CODE>
                            <PRODUCT_PRICE_DETAILS>
                                <PRODUCT_PRICE price_type="net_list">
                                <PRICE_AMOUNT>70.99</PRICE_AMOUNT>
                                <PRICE_CURRENCY>EUR</PRICE_CURRENCY>
                                <TAX>.16</TAX>
                                </PRODUCT_PRICE>
                            </PRODUCT_PRICE_DETAILS>
                        </CONFIG_INFO>
                        <VALUE_ORDER>2</VALUE_ORDER>
                    </FT_VALUE>
                </FT_VALUES>
            </FEATURE_CONTENT>
        </CLASSIFICATION_SYSTEM_FEATURE_TEMPLATE>
    </CONFIG_FEATURE>
    <MIN_OCCURANCE>0</MIN_OCCURANCE>
    <MAX_OCCURANCE>1</MAX_OCCURANCE>
</CONFIG_STEP>
```

Once the user has completed all configuration steps, in this example the end price is determined by addings the basic price **PRODUCT** -> **PRODUCT_PRICE_DETAILS**) as well as the prices of all configuration steps and selected alternatives. Refer to the **PRODUCT_CONFIG_DETAILS** element for examples showing how prices of configurations are calculated via price formulas.

Copyright © 2022 BME e.V. - BMEcat® Version 2005.2
Copyright © 2010-2021 BME e.V. - BMEcat® Version 2005.1
Copyright © 2005-2009 BME e.V. - BMEcat® Version 2005
Copyright © 1998–2004 Fraunhofer IAO, Stuttgart; Universität Essen BLI - BMEcat® Version 1.2

The user can also select one of two pre-defined configurations (**PREDEFINED_CONFIG**) without travelling through all configuration steps. The pre-defined configurations describe a complete configuration by their configuration code (**PREDEFINED_CONFIG_CODE**). The indicated price is the final price, which is not subject to further change. The pre-defined configurations can be ordered directly via the indicated product number (**SUPPLIER_PID**).

```
<PREDEFINED_CONFIGS>
    <PREDEFINED_CONFIG>
        <PREDEFINED_CONFIG_CODE>Lap23-HDDADGDG55555-PORACCU112-PORCD121</PREDEFINED_CONFIG_CODE>
        <PREDEFINED_CONFIG_NAME>model standard</PREDEFINED_CONFIG_NAME>
        <PREDEFINED_CONFIG_DESCR>Our model with basic equipment</PREDEFINED_CONFIG_DESCR>
        <PRODUCT_PRICE_DETAILS>
            <PRODUCT_PRICE price_type="net_list">
                <PRICE_AMOUNT>899.99</PRICE_AMOUNT>
                <PRICE_CURRENCY>EUR</PRICE_CURRENCY>
                <TAX>.16</TAX>
            </PRODUCT_PRICE>
        </PRODUCT_PRICE_DETAILS>
        <SUPPLIER_PID>Laptop23Standard</SUPPLIER_PID>
        <INTERNATIONAL_PID type="ean">1231231231244</INTERNATIONAL_PID>
    </PREDEFINED_CONFIG>
    <PREDEFINED_CONFIG>
        <PREDEFINED_CONFIG_CODE>Lap23-HDDXXX666-PORACCU112-PORDVDRW1-BAG09</PREDEFINED_CONFIG_CODE>
        <PREDEFINED_CONFIG_NAME>model exclusive</PREDEFINED_CONFIG_NAME>
        <PREDEFINED_CONFIG_DESCR>Our top model</PREDEFINED_CONFIG_DESCR>
        <PRODUCT_PRICE_DETAILS>
            <PRODUCT_PRICE price_type="net_list">
                <PRICE_AMOUNT>1499.99</PRICE_AMOUNT>
                <PRICE_CURRENCY>EUR</PRICE_CURRENCY>
                <TAX>.16</TAX>
            </PRODUCT_PRICE>
        </PRODUCT_PRICE_DETAILS>
        <SUPPLIER_PID>Laptop23Exklusiv</SUPPLIER_PID>
        <INTERNATIONAL_PID type="ean">1231231231231</INTERNATIONAL_PID>
    </PREDEFINED_CONFIG>
</PREDEFINED_CONFIGS>
```

7 Classification systems, catalog group systems, and feature systems

For structuring the catalog, building classes of similar products, and describing products by common features respective systems can be transferred with the **CLASSIFICATION_SYSTEM** element. Eventually, these systems can be referenced on the product level in the context of product features and classification. There are different kinds and terms of these systems, i.e.:

- Catalog group systems for hierarchical navigation within the catalogs,
- Catalog structures for hierarchical navigation within the catalogs,
- Material and product group systems for subdividing an assortment,
- Classification systems for the mostly hierarchical and unequivocal assortment structuring,
- Standardized classification systems (e.g., eCl@ss, ETIM, GPC, proficl@ss, UNSPSC),
- Subject group systems,
- Reference hierarchies,
- Feature systems,
- Feature group systems,
- Feature libraries,
- Feature lexica,
- Feature dictionaries.

Copyright © 2022 BME e.V. - BMEcat® Version 2005.2
Copyright © 2010-2021 BME e.V. - BMEcat® Version 2005.1
Copyright © 2005-2009 BME e.V. - BMEcat® Version 2005
Copyright © 1998–2004 Fraunhofer IAO, Stuttgart; Universität Essen BLI - BMEcat® Version 1.2

For simplification reasons, all of the aforementioned systems are summarized in the BMEcat® specification under the generic term classification system.

In BMEcat® 2005 the **CLASSIFICATION_SYSTEM** element has been extended and improved in such a way that almost all presently known classification systems can be transferred. The distinction between (1) catalog group systems without feature lists (**CATALOG_GROUP_SYSTEM**), (2) feature systems (**FEATURE_SYSTEM**), and (3) classification systems still existing in BMEcat® 1.2, is no longer necessary. Therefore, the **FEATURE_SYSTEM** element - already marked as depricated in BMEcat® 1.2 - has been removed; the **CATALOG_GROUP_SYSTEM** element will be removed in the next BMEcat® version and should not be used any longer, if possible.

The underlying BMEcat® 2005 data model for classification systems is oriented to a large extent at ISO 13584, the international standard for product description and classification on the basis of classes and features. For details on this standards refer to the document "ISO 13584-1:2001 Industrial automation systems and integration – Parts library – Part 1: Overview and fundamental principles" (see **http://www.iso.ch**).

In a BMEcat® catalog document one or several classification systems can be transferred, if any. If the respective classification system is already existing in the target system, then the transmission can be omitted; in this case, the catalog document only transfers product-related classifications (see **PRODUCT_FEATURES** element), but not the definition of the classification system; this scenario applies in particular to standardized classification systems.

7.1 Definition of classification systems

The definition of a classification system is subdivided into several data areas. Depending upon the kind of system, individual data areas can bee dropped (e.g., UNSPSC: no features). First of all the system has to be described, e.g.:

- Short and long description,
- Version information,
- Reference to the organization that maintaines the system,
- Meta information

The meta information serves for describing the type of hierarchy and in particular the feature organization. This information can both be indicated for the users as well as used by the importing target systems in order to direct presentation respectively processing:

- Class hierarchy: number of levels,
- Naming of the individual hierarchic levels (e.g., segment -> group -> commodity),
- Indication, whether products may be mapped only to the lowest groups (leaves of the classification tree),
- Indication, whether each product may be allocated to one group only ("genuine" classification),
- Indication, whether the hierarchy is balanced, i.e. whether all branches of the hierarchy tree have the same number of levels,
- Indication, whether features of higher groups are inherited to the subordinated groups (feature inheritance).

The two main parts of classification systems are groups respectively features.

In BMEcat®, the features are defined independently of the groups. Subsequently the features can be used again in the group definitions (formation of feature lists) and, if necessary, they can be supplemented or changed in their definition. Thus the repeated use of the same features is supported and the data volume to be transferred is minimized.

7.2 Definition of features

Features can be described in great detail and comprehensively (**CLASSIFICATION_SYSTEM_FEATURE_TEMPLATE**), on one hand to direct the processing and the representation in target systems and on the other hand to supply the user with a precise feature definition; this

Copyright © 2022 BME e.V. - BMEcat® Version 2005.2
Copyright © 2010-2021 BME e.V. - BMEcat® Version 2005.1
Copyright © 2005-2009 BME e.V. - BMEcat® Version 2005
Copyright © 1998–2004 Fraunhofer IAO, Stuttgart; Universität Essen BLI - BMEcat® Version 1.2

is also important in the case the user employs the feature definitions transferred via BMEcat® for classification processes.

Inter alia, for each feature the following information can be transferred:

- Feature name, short name, and description,
- Identificator and version,
- Mapping to a feature group (e.g., "measurements" for the feature "length",
- Domain of values (**FEATURE_CONTENT**).

The domain of values is dependent on the data type; thus an interval can be indicated for numeric data types, the minimum and maximum length for character strings, and the value list for enumerations. Further information can be:

- Unit of measurement,
- Value list (**FT_VALUES**): for enumerations the values can either be indicated directly or previously defined values from the range of **ALLOWED_VALUES** can be taken as reference,
- Synonyms for the feature name,
- Feature symbol (e.g., a formula symbol),
- Illustration (e.g., graphic with emphasis on the measure, which represents the feature),
- Distinction of mandatory and optional features,
- Order of appearance of the feature when displayed in target systems,
- Source (e.g., reference to standard),
- Notes for the interpretation,
- Comments for the utilization.

7.3 Definition of groups

For each group (**CLASSIFICATION_GROUP**), at least the identificator and the group name have to be defined. Usually further information is needed, in order to build the group hierarchy by pointing to the superordinate group, and to control and improve both processing by and representation in target systems. Inter alia the following information can be transferred:

- Group name, short name, and description,
- Synonyms for the group name (e.g., for search),
- Illustration (e.g., showing typical products),
- Order of appearance of the group when displayed in target systems,
- Source indication (e.g. reference to standard),
- Notes for the interpretation,
- Comments for the utilization.

Finally, previously defined features can be assigned to the group; all assigned features form the feature lists of the respective group (**CLASSIFICATION_GROUP_FEATURE_TEMPLATES**). If necessary, the allocation can add or change characteristics of the feature.

7.4 Definition of values

For enumeration features, which allow values from a list of predefined values, the values can be defined with **ALLOWED_VALUES**. This definition is independent of the use for a concrete feature; this enables to use the same value several times and minimizes the data volume as well. Inter alia for each value the following information can be transferred:

- Identificator for referencing in feature definitions,
- the value itself,
- Short name (e.g., " PTFE " for "Teflon")
- Synonyms (e.g. , "lilac" for "violet")
- Description/explanation,
- Version information,
- Source (e.g., reference to standard).

7.5 Definition of units of measurement

Copyright © 2022 BME e.V. - BMEcat® Version 2005.2
Copyright © 2010-2021 BME e.V. - BMEcat® Version 2005.1
Copyright © 2005-2009 BME e.V. - BMEcat® Version 2005
Copyright © 1998–2004 Fraunhofer IAO, Stuttgart; Universität Essen BLI - BMEcat® Version 1.2

If the classification system does not use any standardized units of measurement (e.g., SI units) for its features, or the standard features are unknown to the importing target system, the units of measurement themselves can be defined and transferred in BMEcat®. The **UNIT** element takes care of this; the identificator defined in its sub element **UNIT_ID** can be used for referencing from a feature to this unit (**FT_UNIT_IDREF**).

8 Changes in BMEcat 2005.1

Product classifications in e-business up to now are restricted to simple tree-structures. The consequences of this are:

- Products can only be assigned to the lowest level of the tree strucure
- Relationships between similar products could not be recognized, descripted and managed
- The amount for describing product properties and changing and versionising them in tree structures is very high and can easily get unefficient
- More complex products with many modules and intersections to other components or products could not be described

In the meantime, a new concept based on inheritance and polymorphism were added to product classifcation systems, e.g., eCl@ss. This concepts offers important advantages for the E-Busines in general and especially for the catalog and product data management.

- it can reduce the amount for describing and updating of productproperties dramatically
- it can reduce the amount for describing and updating the relationships between properties, products and productgroups dramatically
- it allows to assign properties or property-groups to all levels of the classification trees, and so supports the comparison of productgroups
- it allows to harmonize the use of properties over all levels of classification and between products and product-groups
- it offers new and useful posibilities to standardize productdata along the whole lifecycle and across all relevant organizations, that deal with catalog/product data management

Because of these advantages the schema of BMEcat 2005 was enhancead by new elements. This includes the following changes against BMEcat 2005:

- The new concepts "aspect", "block", "cardinality" and "polymorphism" that were introduced by eCl@ss 7.0 are addressed by the following changes:
  - Adding the attributes "id" and "parentid" in to the FEATURE element
  - Adding the element REFERENCE_FEATURE_GROUP describing the properties of the so called aspect class
- Changing description elements of properties so that properties can be described in multiple languages in the same catalog.

All these modifications are optional. So BMEcat 2005.1 will be fully downward compatibel to BMEcat 2005.

9 Changes in BMEcat 2005.2

With 2005.2, the second revision of BMEcat® 2005 was released. This revision was created in close cooperation with the ECLASS e. V. The main objective of the revision was to improve the support of classification systems in BMEcat and was driven by the increasing complexity of products that has to be reflected in their description:

- The allowed length of product's feature names was increased to 80 characters. This allows a more precise naming of features .
- For describing a product feature, it is now possible to combine values and reference to values in any order. In the former version, it was only possible to list either values or reference to values. By this extension, the BMEcat® reflects the increasing complexity of products.
- The length of a feature value is not restricted anymore to support any length that is defined in any product classification system.
- The list of MIME types was extended. Now, any official MIME type can be used in the corresponding BMEcat elements. This allows a precise description of any kind of document provided along with a product like videos and audio files as well as CAD drawings.

Copyright © 2022 BME e.V. - BMEcat® Version 2005.2
Copyright © 2010-2021 BME e.V. - BMEcat® Version 2005.1
Copyright © 2005-2009 BME e.V. - BMEcat® Version 2005
Copyright © 1998–2004 Fraunhofer IAO, Stuttgart; Universität Essen BLI - BMEcat® Version 1.2

In addition, enumeration based on international standards were updated as well as the documenation improved. All changes keep the downward-compatibility to BMEcat 2005® and 2005.1.

For details, see the history of changes in BMEcat® 2005.2.

Copyright © 2022 BME e.V. - BMEcat® Version 2005.2
Copyright © 2010-2021 BME e.V. - BMEcat® Version 2005.1
Copyright © 2005-2009 BME e.V. - BMEcat® Version 2005
Copyright © 1998–2004 Fraunhofer IAO, Stuttgart; Universität Essen BLI - BMEcat® Version 1.2

Reference of elements - order by appearance

BMECAT

(Root element)

Every valid catalog document in BMEcat format starts with the root element **BMECAT** and consists of a header part (**HEADER**) and a transaction part (**T_NEW_CATALOG**, **T_UPDATE_PRODUCTS** or **T_UPDATE_PRICES**).

The header contains global data that is valid for all types of catalog data interchange, for example further details about the supplier or information concerning a skeleton agreement of the kind that sometimes exists between the buying firm and the supplier.

The transaction part specifies which parts of the catalog (e.g., complete catalog, or price update) are to be transferred.

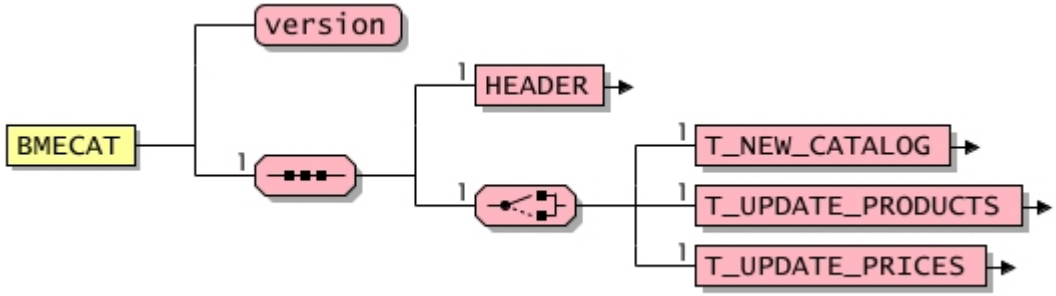

General					
Used in	Default value	Data type	Field length	Lang. specific	l.chg. in ver.
-	-	-	-	-	-

Attributes								
Designation	Attribute name	Mandatory/ optional	Explanation	Default value	Data type	Field length	Lang. specific	l.chg. in ver.
Version	version	Mandatory	Specifies the version of the BMEcat standard to which the catalog document corresponds; See also: **Permitted values for attribute "version"**	-	**dtSTRING**	20	-	-

Permitted values for attribute "version"			
Designation	Attribute value	Explanation	l.chg. in ver.
Version 1.2	1.2	Catalog document corresponds to BMEcat 1.2	-
Version 2005	2005	Catalog document corresponds to BMEcat 2005	2005fd

Copyright © 2022 BME e.V. - BMEcat® Version 2005.2
Copyright © 2010-2021 BME e.V. - BMEcat® Version 2005.1
Copyright © 2005-2009 BME e.V. - BMEcat® Version 2005
Copyright © 1998–2004 Fraunhofer IAO, Stuttgart; Universität Essen BLI - BMEcat® Version 1.2

Permitted values for attribute "version"			
Designation	Attribute value	Explanation	l.chg. in ver.
		 2005fd: New value	
Version 2005.1	2005.1	Catalog document corresponds to BMEcat 2005.1 2005.1: New value	2005.1
Version 2005.2	2005.2	Catalog document corresponds to BMEcat 2005.2 2005.2: New value	2005.2

Elements								
Designation	Element name	Mandatory/ Optional	Single/ Multiple	Explanation	Default value	Data type	Field length	Lang. specific	l.chg. in ver.
Header section	**HEADER**	Mandatory	Single	In the header, information on the catalog and the catalog document are transferred, and default values are set. 	-	-	-	-	2005
Transaction area 'new catalog'	**T_NEW_CATALOG - prev_version**	Mandatory	Single	Transfer a of new catalog 	-	-	-	-	2005
Transaction area 'product update'	**T_UPDATE_PRODUCTS - prev_version**	Mandatory	Single	Updating of product data 	-	-	-	-	2005
Transaction area 'price update'	**T_UPDATE_PRICES - prev_version**	Mandatory	Single	Updating of price information 	-	-	-	-	2005

Example
BMEcat catalog document transferring a new catalog (transaction **T_NEW_CATALOG**):

```
<BMECAT version="2005">
    <HEADER>
        ...
    </HEADER>
    <T_NEW_CATALOG>
```

Copyright © 2022 BME e.V. - BMEcat® Version 2005.2
Copyright © 2010-2021 BME e.V. - BMEcat® Version 2005.1
Copyright © 2005-2009 BME e.V. - BMEcat® Version 2005
Copyright © 1998–2004 Fraunhofer IAO, Stuttgart; Universität Essen BLI - BMEcat® Version 1.2

```
        ...
    </T_NEW_CATALOG>
</BMECAT>
```

Copyright © 2022 BME e.V. - BMEcat® Version 2005.2
Copyright © 2010-2021 BME e.V. - BMEcat® Version 2005.1
Copyright © 2005-2009 BME e.V. - BMEcat® Version 2005
Copyright © 1998–2004 Fraunhofer IAO, Stuttgart; Universität Essen BLI - BMEcat® Version 1.2

HEADER

(Header section)

In the header, information on the catalog and the catalog document are transferred, and default values are set.

2005fd: The element was revised and the following sub-elements were added: **BUYER_IDREF**, **LEGAL_INFORMATION**, **SUPPLIER_IDREF**
2005: The sub-element was renamed to **LEGAL_INFO**. The sub-element **DOCUMENT_CREATOR_IDREF** was added.

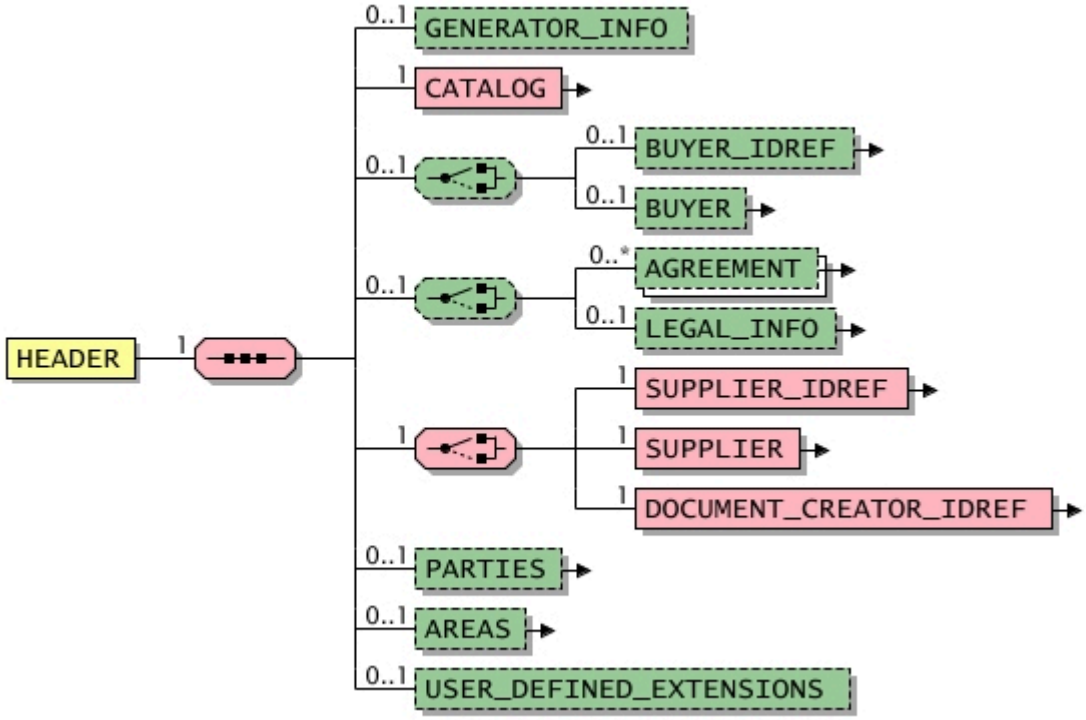

General					
Used in	Default value	Data type	Field length	Lang. specific	l.chg. in ver.
BMECAT	-	-	-	-	2005

Copyright © 2022 BME e.V. - BMEcat® Version 2005.2
Copyright © 2010-2021 BME e.V. - BMEcat® Version 2005.1
Copyright © 2005-2009 BME e.V. - BMEcat® Version 2005
Copyright © 1998–2004 Fraunhofer IAO, Stuttgart; Universität Essen BLI - BMEcat® Version 1.2

Elements									
Designation	Element name	Mandatory/ Optional	Single/ Multiple	Explanation	Default value	Data type	Field length	Lang. specific	l.chg. in ver.
Generator information	**GENERATOR_INFO**	Optional	Single	Information about the generator (manual or automatic) of the document	-	**dtSTRING**	250	-	-
Catalog information	**CATALOG**	Mandatory	Single	Information on the identification and description of the catalog as well as its default values	-	-	-	-	2005.1
Reference to the buyer	**BUYER_IDREF** **- type**	Optional	Single	Reference to the buyer. It contains the unique identifier (**PARTY_ID**) of the respective party that is defined in the document (**PARTY** element).	-	**dtSTRING**	250	-	2005fd
Buyer information	**BUYER**	Optional	Single	Information on the buyer	-	-	-	-	-
Reference to a skeleton agreement	**AGREEMENT** **- type** **- default**	Optional	Multiple	Information on the skeleton agreement which serves as a basis for the validity of the business document	-	-	-	-	2005fd
Legal information	**LEGAL_INFO**	Optional	Single	Legal information for different areas or countries	-	-	-	-	2005
Reference to supplier	**SUPPLIER_IDREF** **- type**	Mandatory	Single	Reference to the supplier. It contains the unique identifier (**PARTY_ID**) of the respective party that is defined in the document (element **PARTY**).	-	**dtSTRING**	250	-	2005fd
Supplier	**SUPPLIER**	Mandatory	Single	Information on the supplier	-	-	-	-	-
Document creator	**DOCUMENT_** **CREATOR_IDREF** **- type**	Mandatory	Single	Reference to the document creator. It contains the unique identifier (**PARTY_ID**) of the respective party that is defined in the document (element **PARTY**).	-	**dtSTRING**	250	-	2005
Parties	**PARTIES**	Optional	Single	List of parties that are relevant to this business document	-	-	-	-	2005fd
Areas	**AREAS**	Optional	Single	List of areas	-	-	-	-	2005fd
User-defined extensions	**USER_DEFINED_** **EXTENSIONS**in context CATALOG_STRUCTURE	Optional	Single	This element can be used for transferring information in user-defined non-BMEcat-elements; hence it is possible to extend the pre-defined set of BMEcat-elements by user-defined ones. The usage of those elements results in BMEcat catalog documents, which can only be exchanged between the companies that have agreed on these	-	**udxHEADER**	-	-	-

Copyright © 2022 BME e.V. - BMEcat® Version 2005.2
Copyright © 2010-2021 BME e.V. - BMEcat® Version 2005.1
Copyright © 2005-2009 BME e.V. - BMEcat® Version 2005
Copyright © 1998–2004 Fraunhofer IAO, Stuttgart; Universität Essen BLI - BMEcat® Version 1.2

Elements

Designation	Element name	Mandatory/ Optional	Single/ Multiple	Explanation	Default value	Data type	Field length	Lang. specific	l.chg. in ver.

				extensions. The structure of these elements can be very complex, though it must be valid XML.
				
				USER_DEFINED_EXTENSIONS are defined exclusively as optional fields. Therefore, it is expressly pointed out that if user-defined extensions are used they must be compatible with the target systems and should be clarified on a case-to-case basis.
				The names of the elements must be clearly distinguishable from the names of other elements contained in the BMEcat standard. For this reason, all element must start with the string "UDX" (Example: `<UDX.supplier.elementname>`).
				The definition of user-defined extensions takes place by additional XML DTD or XML Schema files.
				Example: usage of non-BMEcat elements (XML)
				`<CATALOG_STRUCTURE>`
				`  <GROUP_ID>23</GROUP_ID>`
				`  ...`
				`  <USER_DEFINED_EXTENSIONS>`
				`  <UDX.MYORG.CROSSPOINTER type="sparepart">27 </UDX.MYORG.CROSSPOINTER>`
				`  <UDX.MYORG.CROSSPOINTER type="similar">31 </UDX.MYORG.CROSSPOINTER>`
				`  </USER_DEFINED_EXTENSIONS>`
				`</CATALOG_STRUCTURE>`					

Copyright © 2022 BME e.V. - BMEcat® Version 2005.2
Copyright © 2010-2021 BME e.V. - BMEcat® Version 2005.1
Copyright © 2005-2009 BME e.V. - BMEcat® Version 2005
Copyright © 1998–2004 Fraunhofer IAO, Stuttgart; Universität Essen BLI - BMEcat® Version 1.2

CATALOG

(Catalog information)

This element services for transferring information on the identification and description of the catalog.

The following elements can be used in the document header for setting default values, which may be replaced by product-specific values on the product level: **LANGUAGE** (values for the "lang" attribute of language-dependent elements), **TERRITORY** (multiple), **AREA_REFS**, **CURRENCY**, **MIME_ROOT**, **PRICE_FLAG** (mehrfach), **PRICE_TYPE**, **PRICE_FACTOR**, **VALID_START_DATE**, **VALID_END_DATE**, **PRODUCT_TYPE**, **PRODUCT_CATEGORY**, **COUNTRY_OF_ORIGIN**, **TIME_SPAN** (mehrfach), **LEADTIME**, **TRANSPORT**, **SUPPLIER_IDREF**.

2005fd: The element was revised and the following sub-elements were added: **AREA_REFS**, **PRICE_TYPE**, **PRICE_FACTOR**, **VALID_START_DATE**, **VALID_END_DATE**, **PRODUCT_TYPE**, **PRODUCT_CATEGORY**, **COUNTRY_OF_ORIGIN**, **TIME_SPAN**, **LEADTIME**, **TRANSPORT**, **SUPPLIER_IDREF**
2005: The sub-elements **PRICE_TYPE** and **PRODUCT_CATEGORY**, which had been added in BMEcat 2005 final draft, were removed again. The elements **TIME_SPAN** and **LEADTIME** were replaced with **DELIVERY_TIMES**.
2005.1: New sub element **LOCALE** added

Copyright © 2022 BME e.V. - BMEcat® Version 2005.2
Copyright © 2010-2021 BME e.V. - BMEcat® Version 2005.1
Copyright © 2005-2009 BME e.V. - BMEcat® Version 2005
Copyright © 1998–2004 Fraunhofer IAO, Stuttgart; Universität Essen BLI - BMEcat® Version 1.2

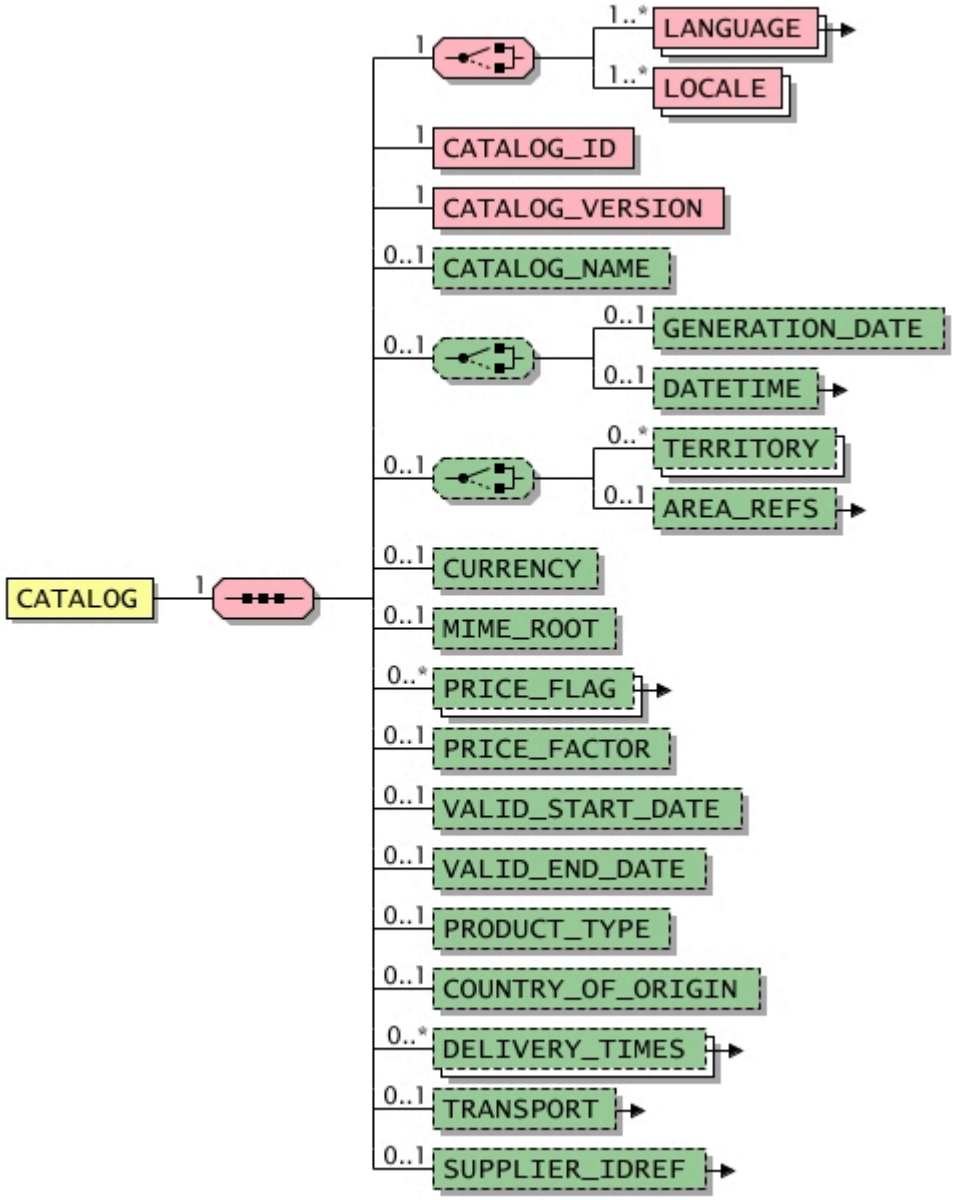

Copyright © 2022 BME e.V. - BMEcat® Version 2005.2
Copyright © 2010-2021 BME e.V. - BMEcat® Version 2005.1
Copyright © 2005-2009 BME e.V. - BMEcat® Version 2005
Copyright © 1998–2004 Fraunhofer IAO, Stuttgart; Universität Essen BLI - BMEcat® Version 1.2

General

Used in	Default value	Data type	Field length	Lang. specific	l.chg. in ver.
HEADER	-	-	-	-	2005.1

Elements

Designation	Element name	Mandatory/ Optional	Single/ Multiple	Explanation	Default value	Data type	Field length	Lang. specific	l.chg. in ver.
Language	**LANGUAGE - default**	Mandatory	Multiple	Specification of used languages, especially the default language of all language-dependent information	-	**dtLANG**	-	-	-

Language variantes	**LOCALE**	Mandatory	Multiple	BMEcat 2005 only allows language codes according to ISO 639-2:1998. But this standard does not support language variants like British and American English or various Germans in Germany, Austria and Switzerland.
				
				In the following, language variants will be name "LOCALES". To describe language variants, the RFC 5646 (**https://datatracker.ietf.org/doc/html/rfc5646**) is used.
				
				RFC 5646 is not a ISO standard, but this standard describes "best practices" for selecting appropriate ISO standards for the representation of codes for languages, regions and language variants as well as signal codes. This includes useful combinations of these codes. Thus, RFC 5646 is used as best-possible solution.
				
				2005.1: New element
				2005.2: The documentation was updated and refined.
				
				Example
				`<HEADER>`
				`  <CATALOG>`
				`  <LOCALE>en-US</LOCALE>`
				`  <LOCALE>fr-FR</LOCALE>`
				`  <LOCALE>de-AT</LOCALE>`
				`  <CATALOG_ID>1</CATALOG_ID>`
				`  <CATALOG_VERSION>1.0</CATALOG_VERSION>`
				`  <CATALOG_NAME>Sample catalog</CATALOG_NAME>`
				`  <CURRENCY>EUR</CURRENCY>`
				`  </CATALOG>`
				`  <SUPPLIER>`
				`  <SUPPLIER_NAME>ACME</SUPPLIER_NAME>`
				`  <ADDRESS type="supplier">`
				`  <EMAIL>info@Musterfirma.at</EMAIL>`
				`  </ADDRESS>`
				`  </SUPPLIER>`
				`</HEADER>`
					-	**dtLOCALE**	-	-	2005.1

Copyright © 2022 BME e.V. - BMEcat® Version 2005.2
Copyright © 2010-2021 BME e.V. - BMEcat® Version 2005.1
Copyright © 2005-2009 BME e.V. - BMEcat® Version 2005
Copyright © 1998–2004 Fraunhofer IAO, Stuttgart; Universität Essen BLI - BMEcat® Version 1.2

Elements

Designation	Element name	Mandatory/ Optional	Single/ Multiple	Explanation	Default value	Data type	Field length	Lang. specific	l.chg. in ver.
				Example <PRODUCT> ... <PRODUCT_FEATURES> ... <FEATURE> <FTEMPLATE> <FT_ID>PAR-ABC123-001</FT_ID> <FT_NAME locale="en-US">Color</FT_NAME> <FT_NAME locale="de-AT">Farbe</FT_NAME> <FT_NAME locale="fr-FR">Couleur</FT_NAME> </FTEMPLATE> <FVALUE locale="en-US">red</FVALUE> <FVALUE locale="de-AT">rot</FVALUE> <FVALUE locale="fr-FR">rouge</FVALUE> </FEATURE> </PRODUCT_FEATURES> ... </PRODUCT>					
Catalog ID	**CATALOG_ID**	Mandatory	Single	Unique catalog identification. This ID is usually assigned by the supplier when the catalog is generated and remains unchanged throughout the entire lifecycle of the catalog.	-	**dtSTRING**	20	-	-
Catalog version	**CATALOG_VERSION**	Mandatory	Single	Version number of the catalog. May only be reset on the target system in conjunction with a **T_NEW_CATALOG** transaction and not in the case of updates, see also example (**Interaction of various transactions**). Format: "MajorVersion"."MinorVersion" (maximum xxx.yyy) **Example** 001.120 7.3	-	**dtSTRING**	7	-	1.2_fd
Catalog name	**CATALOG_NAME**	Optional	Single	Any name that describes the catalog. Example: Fall/Winter 2005/2006	-	**dtMLSTRING**	100	Yes	-
Generation date	**GENERATION_DATE**	Optional	Single	Date of the generation of the catalog document 2005fd: This new element replaces with a modified semantics the former **DATETIME** in the context of CATALOG element and its type='generation_date' attribute.	-	**dtDATETIME**	-	-	2005fd
Date	**DATETIME** in the context of PRODUCT_PRICE_DETAILS	Optional	Single	The element is used to precisely define a time. It is made up of the three elements date, time and time zone.	-	-	-	-	-

Copyright © 2022 BME e.V. - BMEcat® Version 2005.2
Copyright © 2010-2021 BME e.V. - BMEcat® Version 2005.1
Copyright © 2005-2009 BME e.V. - BMEcat® Version 2005
Copyright © 1998–2004 Fraunhofer IAO, Stuttgart; Universität Essen BLI - BMEcat® Version 1.2

Elements

Designation	Element name	Mandatory/ Optional	Single/ Multiple	Explanation	Default value	Data type	Field length	Lang. specific	l.chg. in ver.
	- type								
Territory	**TERRITORY**	Optional	Multiple	Territory (i.e. country, state, region) coded according to ISO 3166	-	**dtCOUNTRIES**	-	-	1.2_fd
Area references	**AREA_REFS**	Optional	Single	List of references to areas	-	-	-	-	2005fd
Currency	**CURRENCY**	Optional	Single	Provides the currency that is default for all price information in the catalog. If the price of a product has a different currency, or this element is not used, the the currency has to be specified in the **PRICE_CURRENCY** element for the respective product. Therefore, the currency must be specified in the catalog header or for each product separately. It is recommended to define a default currency.	-	**dtCURRENCIES**	-	-	-
MIME root directory	**MIME_ROOT**	Optional	Single	A relative directory can be entered here (and/or a URI), i.e. one to which the relative paths in **MIME_SOURCE** refer.	-	**dtMLSTRING**	250	Yes	-
Price flag	**PRICE_FLAG** **- type**	Optional	Multiple	Base of a price (e.g. with/without freight)	-	**dtBOOLEAN**	-	-	-
Price factor	**PRICE_FACTOR**	Optional	Single	The (discount) factor always multiplied by the price specified in this element in order to determine the end price. 2005: A default value was added.	1	**dtNUMBER**	-	-	2005
Valid start date	**VALID_START_DATE**	Optional	Single	Dates for the beginning of the period of validity 2005fd: This new element replaces with a modified semantics the **DATETIME** in the context of PRODUCT_PRICE_DETAILS element and its attribute type='valid_start_date'.	-	**dtDATETIME**	-	-	2005fd
Valid end date	**VALID_END_DATE**	Optional	Single	Date for the end of the period of validity 2005fd: This new element replaces with a modified semantics the **DATETIME** in the context of PRODUCT_PRICE_DETAILS element and its attribute type='valid_end_date'.	-	**dtDATETIME**	-	-	2005fd
Product type	**PRODUCT_TYPE**	Optional	Single	Characterizes the product with regard to its general type, i.e. being tangible or service	-	**dtSTRING**	50	-	2005fd

Copyright © 2022 BME e.V. - BMEcat® Version 2005.2
Copyright © 2010-2021 BME e.V. - BMEcat® Version 2005.1
Copyright © 2005-2009 BME e.V. - BMEcat® Version 2005
Copyright © 1998–2004 Fraunhofer IAO, Stuttgart; Universität Essen BLI - BMEcat® Version 1.2

Elements									
Designation	Element name	Mandatory/ Optional	Single/ Multiple	Explanation	Default value	Data type	Field length	Lang. specific	l.chg. in ver.
				2005fd: New element See also: **Permitted values for element PRODUCT_TYPE**					
Country of origin	**COUNTRY_OF_ORIGIN**	Optional	Single	Contains the country of origin of the product. By using a subdivision code it is possible to reference a region. 2005fd: New element	-	**dtCOUNTRIES**	-	-	2005fd
Delivery time	**DELIVERY_TIMES**	Optional	Multiple	Information on the delivery time 	-	-	-	-	2005fd
Transport	**TRANSPORT**	Optional	Single	Information about the terms of transport 	-	-	-	-	2005fd
Reference to supplier	**SUPPLIER_IDREF - type**	Optional	Single	Reference to the supplier. It contains the unique identifier (**PARTY_ID**) of the respective party that is defined in the document (element **PARTY**). 	-	**dtSTRING**	250	-	2005fd

Permitted values for element PRODUCT_TYPE			
Designation	Element value	Explanation	l.chg. in ver.
Product bundle	bundle	The product is part of a product bundle.	2005fd
Component	component	The product is component of another product.	2005fd
Optionally configurable	configurable	The product can be configured. If the product is not configured by the user, it is determined by its default values. See also **PRODUCT_TYPE =must_be_configured**.	2005fd
Contract	contract	The product is a contract.	2005fd
Licence	license	The product is a licence.	2005fd
Orderable product	major	The product can be ordered.	2005fd
Product part	minor	The product can only be ordered in conjunction with another product.	2005fd
Configurable	must_be_configured	The product has to be configured, unless it can not be ordered. See also **PRODUCT_TYPE =configurable**.	2005fd
Physical product	physical	The product is physical, thus tangible.	2005fd
Professionel Service	professional_services	The product is a professional service being provided by one or more individuals. The indivials are professionals in their field (e.g., accounting, educational, legal, medical, or architectural services).	2005fd
Service	service	The product is a service.	2005fd

Copyright © 2022 BME e.V. - BMEcat® Version 2005.2
Copyright © 2010-2021 BME e.V. - BMEcat® Version 2005.1
Copyright © 2005-2009 BME e.V. - BMEcat® Version 2005
Copyright © 1998–2004 Fraunhofer IAO, Stuttgart; Universität Essen BLI - BMEcat® Version 1.2

LANGUAGE

(Language)

This element specifies the used languages, especially the default language of all language-dependent information.

Single-langual catalogs: This element contains the used language. If the default-attribute is set, then it is not necessary to name the language in all elements that contain language-dependent information (default language).

Multi-lingual catalogs: This element must be used to specify each language that occurs in the document, therefore the element appears more than once. If the default-attribute is set for the most frequently or always used language, then it is not necessary to name for all language-dependent information this language (default language); it is sufficient to mark information in other languages.

General					
Used in	Default value	Data type	Field length	Lang. specific	l.chg. in ver.
CATALOG, **IPP_LANGUAGES**	-	**dtLANG**	-	-	-

Attributes								
Designation	Attribute name	Mandatory/ optional	Explanation	Default value	Data type	Field length	Lang. specific	l.chg. in ver.
Default flag	default	Optional	This element determines the default language of all language-dependent information in the document. * 2005fd: New attribute	-	**dtBOOLEAN**	-	-	2005fd

Copyright © 2022 BME e.V. - BMEcat® Version 2005.2
Copyright © 2010-2021 BME e.V. - BMEcat® Version 2005.1
Copyright © 2005-2009 BME e.V. - BMEcat® Version 2005
Copyright © 1998–2004 Fraunhofer IAO, Stuttgart; Universität Essen BLI - BMEcat® Version 1.2

DATETIME in the context of PRODUCT_PRICE_DETAILS

(Date)

The element is used to precisely define a time. It is made up of the three elements date, time and time zone.

DATETIME is used at various places within the BMEcat formats. The description of the time involved is carried out through the attribute '**type**' which can accept various pre-defined values.

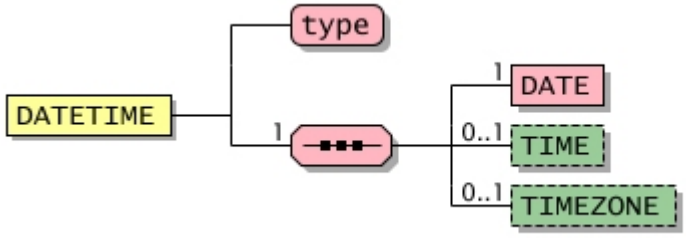

General					
Used in	Default value	Data type	Field length	Lang. specific	l.chg. in ver.
CATALOG	-	-	-	-	-

Attributes								
Designation	Attribute name	Mandatory/ optional	Explanation	Default value	Data type	Field length	Lang. specific	l.chg. in ver.
Date type	type	Mandatory	Specifies the date type in more detail.; Value range: depending on context See also: **Permitted values for attribute "type"**	-	**dtSTRING**	20	-	-

Permitted values for attribute "type"			
Designation	Attribute value	Explanation	l.chg. in ver.
Generation date	generation_date	Date on which the catalog document was compiled; is used in the element **CATALOG**	-

Elements									
Designation	Element name	Mandatory/ Optional	Single/ Multiple	Explanation	Default value	Data type	Field length	Lang. specific	l.chg. in ver.
Date	**DATE**	Mandatory	Single	Date	-	**dtDATETYPE**	-	-	-

Copyright © 2022 BME e.V. - BMEcat® Version 2005.2
Copyright © 2010-2021 BME e.V. - BMEcat® Version 2005.1
Copyright © 2005-2009 BME e.V. - BMEcat® Version 2005
Copyright © 1998–2004 Fraunhofer IAO, Stuttgart; Universität Essen BLI - BMEcat® Version 1.2

Elements									
Designation	Element name	Mandatory/ Optional	Single/ Multiple	Explanation	Default value	Data type	Field length	Lang. specific	l.chg. in ver.
Time	**TIME**	Optional	Single	Element for time	-	**dtTIMETYPE**	-	-	-
Time zone	**TIMEZONE**	Optional	Single	Element for timezone	-	**dtTIMEZONETYPE**	-	-	-

Example
The skeleton agreement comes into effect on 25 October, 2000 at 23:13 hrs GMT.

```
<DATETIME type="agreement_start_date">
    <DATE>2000-10-25</DATE>
    <TIME>23:13:00</TIME>
    <TIMEZONE>GMT</TIMEZONE>
</DATETIME>
```

Copyright © 2022 BME e.V. - BMEcat® Version 2005.2
Copyright © 2010-2021 BME e.V. - BMEcat® Version 2005.1
Copyright © 2005-2009 BME e.V. - BMEcat® Version 2005
Copyright © 1998–2004 Fraunhofer IAO, Stuttgart; Universität Essen BLI - BMEcat® Version 1.2

AREA_REFS

(Area references)

This element contains a list of area. The areas are not defined here, but referenced by their identifier.

2005fd: New element

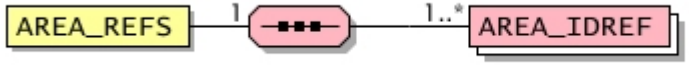

General					
Used in	Default value	Data type	Field length	Lang. specific	l.chg. in ver.
AREA_LEGAL_INFO, **ARTICLE_PRICE**, **CATALOG**, **CUSTOMS_TARIFF_NUMBER**, **DELIVERY_TIMES**, **PRODUCT_PRICE**	-	-	-	-	2005fd

Elements									
Designation	Element name	Mandatory/ Optional	Single/ Multiple	Explanation	Default value	Data type	Field length	Lang. specific	l.chg. in ver.
Reference to an area	**AREA_IDREF**	Mandatory	Multiple	Reference to the unique identifier of an area. The reference must point to an area defined in the document (element **AREA** identified by **AREA_ID**). 2005fd: New element	-	**dtSTRING**	60	-	2005fd

Copyright © 2022 BME e.V. - BMEcat® Version 2005.2
Copyright © 2010-2021 BME e.V. - BMEcat® Version 2005.1
Copyright © 2005-2009 BME e.V. - BMEcat® Version 2005
Copyright © 1998–2004 Fraunhofer IAO, Stuttgart; Universität Essen BLI - BMEcat® Version 1.2

PRICE_FLAG

(Price flag)

This element is used to specify the base of a price (e.g. with/without freight)

Where these fields have not been filled out, no statement on the various components of the price base will be made.

Example: `<PRICE_FLAG type="incl_freight">true</PRICE_FLAG>` means that freight costs are included in the related price. `<PRICE_FLAG type="incl_freight">false</PRICE_FLAG>` means that the freight costs are not included in the related price. Where the element PRICE_FLAG does not occur with the attribute "incl_freight", there is no indication of whether the prices are with or without freight. This must therefore be stipulated elsewhere (e.g. in the skeleton agreement).

General					
Used in	Default value	Data type	Field length	Lang. specific	I.chg. in ver.
ARTICLE_PRICE, **CATALOG**, **PRODUCT_PRICE**	-	**dtBOOLEAN**	-	-	-

Attributes								
Designation	Attribute name	Mandatory/ optional	Explanation	Default value	Data type	Field length	Lang. specific	I.chg. in ver.
Type of costs included	type	Mandatory	This attribute specifies the pool of costs which have an indication of whether or not they contribute to price formation. * 2005fd: The list of values can now be extended. The list here contains only the predefined values. See also: **Predefined values for attribute "type"**	-	**dtSTRING**	20	-	2005fd

Predefined values for attribute "type"			
Designation	Attribute value	Explanation	I.chg. in ver.
Including insurance	incl_assurance	Price includes insurance This value has been replaced by the new value **PRICE_FLAG -->type =incl_insurance**, it will be become obsolete.	-
Including duty	incl_duty	Price includes duty	-
Including freight	incl_freight	Price includes freight costs	-
Including insurance	incl_insurance	Price includes insurance	2005fd

Copyright © 2022 BME e.V. - BMEcat® Version 2005.2
Copyright © 2010-2021 BME e.V. - BMEcat® Version 2005.1
Copyright © 2005-2009 BME e.V. - BMEcat® Version 2005
Copyright © 1998–2004 Fraunhofer IAO, Stuttgart; Universität Essen BLI - BMEcat® Version 1.2

Predefined values for attribute "type"			
Designation	Attribute value	Explanation	l.chg. in ver.
Including packing	incl_packing	Price includes packing costs	-
User defined type	User defined value, format: \w{1,20}	User defined type identification. "\w{1,20}" means that the type identification has to be at least 1 chraracter long up to a maximum of 20 characters.	2005fd

Copyright © 2022 BME e.V. - BMEcat® Version 2005.2
Copyright © 2010-2021 BME e.V. - BMEcat® Version 2005.1
Copyright © 2005-2009 BME e.V. - BMEcat® Version 2005
Copyright © 1998–2004 Fraunhofer IAO, Stuttgart; Universität Essen BLI - BMEcat® Version 1.2

DELIVERY_TIMES

(Delivery time)

This element describes, in which time windows ordered product can be delivered. It should not be confused with the lead time (**LEADTIME**).

2005fd: This element replaces the former **DELIVERY_TIME** element

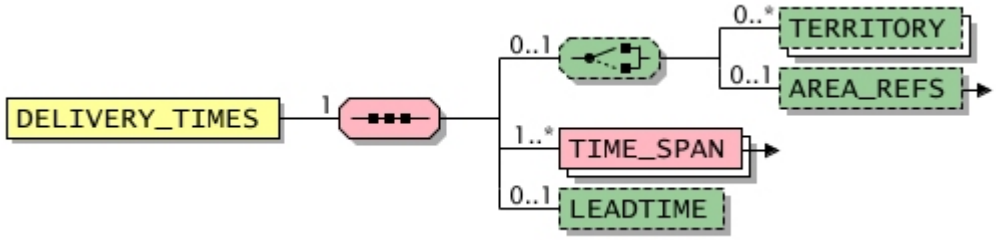

General					
Used in	Default value	Data type	Field length	Lang. specific	l.chg. in ver.
ARTICLE_LOGISTIC_DETAILS, **CATALOG**, **PRODUCT_LOGISTIC_DETAILS**	-	-	-	-	2005fd

Elements

Designation	Element name	Mandatory/ Optional	Single/ Multiple	Explanation	Default value	Data type	Field length	Lang. specific	l.chg. in ver.
Territory	**TERRITORY**	Optional	Multiple	Territory (i.e. country, state, region) coded according to ISO 3166	-	**dtCOUNTRIES**	-	-	1.2_fd
Area references	**AREA_REFS**	Optional	Single	List of references to areas	-	-	-	-	2005fd
Time span	**TIME_SPAN**	Mandatory	Multiple	Definition of a time span or time frame	-	-	-	-	2005
Leadtime	**LEADTIME**	Optional	Single	Leadtime in working days defined as the interval between the receipt of the order and the earliest arrival at the customer 2005fd: This new element replaces with a modified semantics the former **DELIVERY_TIME** element.	-	**dtFLOAT**	-	-	2005fd

Copyright © 2022 BME e.V. - BMEcat® Version 2005.2
Copyright © 2010-2021 BME e.V. - BMEcat® Version 2005.1
Copyright © 2005-2009 BME e.V. - BMEcat® Version 2005
Copyright © 1998–2004 Fraunhofer IAO, Stuttgart; Universität Essen BLI - BMEcat® Version 1.2

Example 1
The following example describes the delivery time for two time intervals. In the first half of the year (Q1 and Q2), delivery takes place from Monday to Friday between 10 and 12 a.m.; in the second half of the year, delivery takes place 24/7.

Example 2
The following example describes that beginning from january every second month (january, march, ...) on every first day of the month delivery takes place.

```
<DELIVERY_TIMES>
    <TIME_SPAN>
        <TIME_BASE>month</TIME_BASE>
        <TIME_VALUE_START>1</TIME_VALUE_START>
        <TIME_VALUE_INTERVAL>2</TIME_VALUE_INTERVAL>
        <SUB_TIME_SPANS>
            <TIME_BASE>dayofmonth</TIME_BASE>
            <TIME_VALUE_START>1</TIME_VALUE_START>
            <TIME_VALUE_END>1</TIME_VALUE_END>
        </SUB_TIME_SPANS>
    </TIME_SPAN>
</DELIVERY_TIMES>
```

Copyright © 2022 BME e.V. - BMEcat® Version 2005.2
Copyright © 2010-2021 BME e.V. - BMEcat® Version 2005.1
Copyright © 2005-2009 BME e.V. - BMEcat® Version 2005
Copyright © 1998–2004 Fraunhofer IAO, Stuttgart; Universität Essen BLI - BMEcat® Version 1.2

TIME_SPAN

(Time span)

This element defines a time span or time frame.

2005fd: New element
2005: The new sub-element **TIME_VALUE_DURATION** was added.

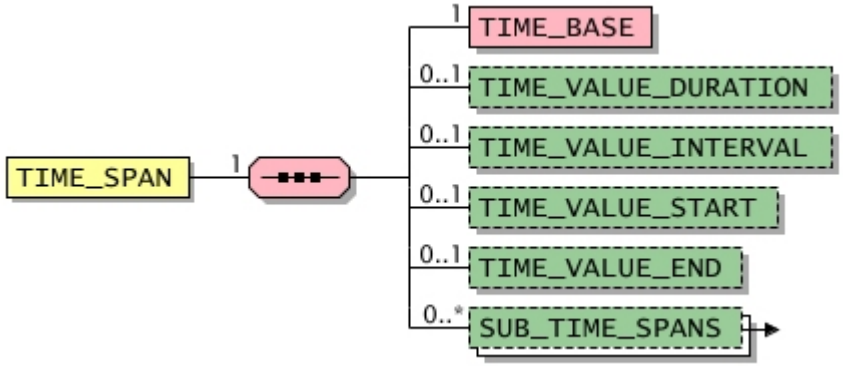

General					
Used in	Default value	Data type	Field length	Lang. specific	l.chg. in ver.
DELIVERY_TIMES	-	-	-	-	2005

Elements

Designation	Element name	Mandatory/ Optional	Single/ Multiple	Explanation	Default value	Data type	Field length	Lang. specific	l.chg. in ver.
Time base	**TIME_BASE**	Mandatory	Single	Time base for a time span or time frame, e.g, hours, weeks. 2005fd: New element 2005: The list of allowed values for this element was extended by the value 'dayofmonth'. See also: **Permitted values for element TIME_BASE**	-	**dtSTRING**	20	-	2005
Time frame interval	**TIME_VALUE_ DURATION**	Optional	Single	Sets the length of a time frame; the unit of measurement is contained in **TIME_BASE** (e.g., hours)	-	**dtSTRING**	20	-	2005

Copyright © 2022 BME e.V. - BMEcat® Version 2005.2
Copyright © 2010-2021 BME e.V. - BMEcat® Version 2005.1
Copyright © 2005-2009 BME e.V. - BMEcat® Version 2005
Copyright © 1998–2004 Fraunhofer IAO, Stuttgart; Universität Essen BLI - BMEcat® Version 1.2

Elements									
Designation	Element name	Mandatory/ Optional	Single/ Multiple	Explanation	Default value	Data type	Field length	Lang. specific	l.chg. in ver.
				 2005: New element					
Time value interval	**TIME_VALUE_ INTERVAL**	Optional	Single	Specifies the intervals between two items of **TIME_BASE**, e.g., each 3 days. 2005: The semantics of this element was changed.	1	**dtSTRING**	20	-	2005
Time frame start	**TIME_VALUE_START**	Optional	Single	Set the start of the time frame 2005fd: New element	-	**dtSTRING**	50	-	2005fd
Time frame end	**TIME_VALUE_END**	Optional	Single	Sets the end of a time frame 2005fd: New element	-	**dtSTRING**	50	-	2005fd
Sub division of a time span	**SUB_TIME_SPANS**	Optional	Multiple	Divides a time span into shorter items; e.g., days of a week, hours of a day. 	-	-	-	-	2005

Permitted values for element TIME_BASE			
Designation	Element value	Explanation	l.chg. in ver.
Date	date	Defines a date; in this case, the TIME_VALUE_... elements have to be filled with values corresponding to the **dtDATETIME** data type.	2005fd
Date and time	datetime	Defines a date and a time; in this case, the TIME_VALUE_... elements have to be filled with values corresponding to the **dtDATETIME** data type.	2005fd
Day of month	dayofmonth	Defines a day of month; in this case, the TIME_VALUE_... elements have to be filled with, for instance, 1 for the first day of the month, 2 for the second day of the month, and so on. 2005: New value	2005
Day of week	dayofweek	Defines a day of week; in this case, the TIME_VALUE_... elements have to be filled with, for instance, 1 = monday, 2 = tuesday, ..., 7 = sunday.	2005fd
Half day	halfday	Defines a half day; in this case, the TIME_VALUE_... elements have to be filled with 1 = morning or 2 = afternoon. A more precise time can not be defined.	2005fd
Half of year	halfofyear	Defines a half year; in this case, the TIME_VALUE_... elements have to be filled with 1 = first half or 2 = second half.	2005fd
Hour	hour	Defines an hour; in this case, the TIME_VALUE_... elements have to be filled with values ranging from 1 to 23.	2005fd
Month	month	Defines a month; in this case, the TIME_VALUE_... elements have to be filled with values ranging from 1 to 12.	2005fd
Quarter	quarterofyear	Defines a quarter (of the year); in this case, the TIME_VALUE_... elements have to be filled with values ranging from 1 to 4.	2005fd

Copyright © 2022 BME e.V. - BMEcat® Version 2005.2
Copyright © 2010-2021 BME e.V. - BMEcat® Version 2005.1
Copyright © 2005-2009 BME e.V. - BMEcat® Version 2005
Copyright © 1998–2004 Fraunhofer IAO, Stuttgart; Universität Essen BLI - BMEcat® Version 1.2

Permitted values for element TIME_BASE			
Designation	Element value	Explanation	l.chg. in ver.
Time	time	Defines a time; in this case, the TIME_VALUE_... elements have to be filled with values corresponding to the **dtDATETIME** data type.	2005fd
Week	week	Defines a week; in this case, the TIME_VALUE_... elements have to be filled with values ranging from 1 to 53.**dtDATETIME** data type.	2005fd
Year	year	Defines a year; in this case, the TIME_VALUE_... elements have to be filled with values corresponding to the **dtDATETIME** data type.	2005fd

Example
Refer also to the examples in the element **DELIVERY_TIMES**.

Copyright © 2022 BME e.V. - BMEcat® Version 2005.2
Copyright © 2010-2021 BME e.V. - BMEcat® Version 2005.1
Copyright © 2005-2009 BME e.V. - BMEcat® Version 2005
Copyright © 1998–2004 Fraunhofer IAO, Stuttgart; Universität Essen BLI - BMEcat® Version 1.2

SUB_TIME_SPANS

(Sub division of a time span)

This element contains sub divisions of a time span, e.g., days of a week, hours of a day.

2005fd: New element
2005: The new sub-element **TIME_VALUE_DURATION** was added.

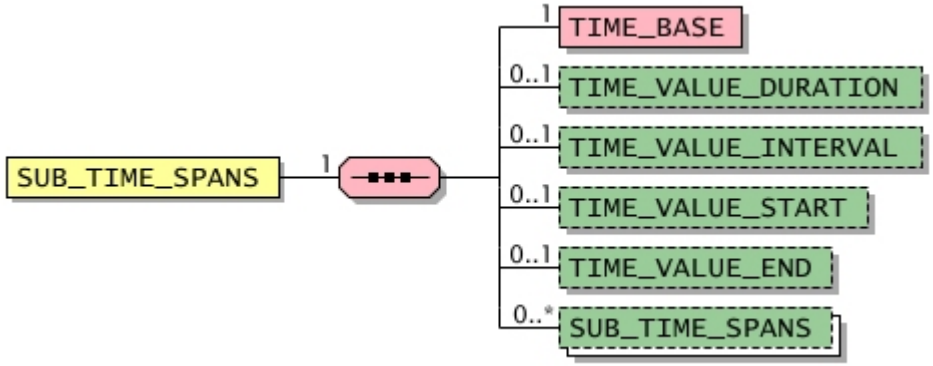

General					
Used in	Default value	Data type	Field length	Lang. specific	l.chg. in ver.
SUB_TIME_SPANS, **TIME_SPAN**	-	-	-	-	2005

Elements									
Designation	Element name	Mandatory/ Optional	Single/ Multiple	Explanation	Default value	Data type	Field length	Lang. specific	l.chg. in ver.
Time base	**TIME_BASE**	Mandatory	Single	Time base for a time span or time frame, e.g, hours, weeks. 2005fd: New element 2005: The list of allowed values for this element was extended by the value 'dayofmonth'. See also: **Permitted values for element TIME_BASE**	-	**dtSTRING**	20	-	2005
Time frame interval	**TIME_VALUE_ DURATION**	Optional	Single	Sets the length of a time frame; the unit of measurement is contained in **TIME_BASE** (e.g., hours)	-	**dtSTRING**	20	-	2005

Copyright © 2022 BME e.V. - BMEcat® Version 2005.2
Copyright © 2010-2021 BME e.V. - BMEcat® Version 2005.1
Copyright © 2005-2009 BME e.V. - BMEcat® Version 2005
Copyright © 1998–2004 Fraunhofer IAO, Stuttgart; Universität Essen BLI - BMEcat® Version 1.2

Elements									
Designation	Element name	Mandatory/ Optional	Single/ Multiple	Explanation	Default value	Data type	Field length	Lang. specific	I.chg. in ver.
				2005: New element					
Time value interval	**TIME_VALUE_ INTERVAL**	Optional	Single	Specifies the intervals between two items of **TIME_BASE**, e.g., each 3 days. 2005: The semantics of this element was changed.	1	**dtSTRING**	20	-	2005
Time frame start	**TIME_VALUE_START**	Optional	Single	Set the start of the time frame 2005fd: New element	-	**dtSTRING**	50	-	2005fd
Time frame end	**TIME_VALUE_END**	Optional	Single	Sets the end of a time frame 2005fd: New element	-	**dtSTRING**	50	-	2005fd
Sub division of a time span	**SUB_TIME_SPANS**	Optional	Multiple	This element contains sub divisions of a time span, e.g., days of a week, hours of a day. 2005fd: New element 2005: The new sub-element **TIME_VALUE_DURATION** was added. **Example** Refer also to the examples in the element **DELIVERY_TIMES**.	-	-	-	-	2005

Permitted values for element TIME_BASE			
Designation	Element value	Explanation	I.chg. in ver.
Date	date	Defines a date; in this case, the TIME_VALUE_... elements have to be filled with values corresponding to the **dtDATETIME** data type.	2005fd
Date and time	datetime	Defines a date and a time; in this case, the TIME_VALUE_... elements have to be filled with values corresponding to the **dtDATETIME** data type.	2005fd
Day of month	dayofmonth	Defines a day of month; in this case, the TIME_VALUE_... elements have to be filled with, for instance, 1 for the first day of the month, 2 for the second day of the month, and so on. 2005: New value	2005
Day of week	dayofweek	Defines a day of week; in this case, the TIME_VALUE_... elements have to be filled with, for instance, 1 = monday, 2 = tuesday, ..., 7 = sunday.	2005fd

Copyright © 2022 BME e.V. - BMEcat® Version 2005.2
Copyright © 2010-2021 BME e.V. - BMEcat® Version 2005.1
Copyright © 2005-2009 BME e.V. - BMEcat® Version 2005
Copyright © 1998–2004 Fraunhofer IAO, Stuttgart; Universität Essen BLI - BMEcat® Version 1.2

Permitted values for element TIME_BASE			
Designation	Element value	Explanation	l.chg. in ver.
Half day	halfday	Defines a half day; in this case, the TIME_VALUE_... elements have to be filled with 1 = morning or 2 = afternoon. A more precise time can not be defined.	2005fd
Half of year	halfofyear	Defines a half year; in this case, the TIME_VALUE_... elements have to be filled with 1 = first half or 2 = second half.	2005fd
Hour	hour	Defines an hour; in this case, the TIME_VALUE_... elements have to be filled with values ranging from 1 to 23.	2005fd
Month	month	Defines a month; in this case, the TIME_VALUE_... elements have to be filled with values ranging from 1 to 12.	2005fd
Quarter	quarterofyear	Defines a quarter (of the year); in this case, the TIME_VALUE_... elements have to be filled with values ranging from 1 to 4.	2005fd
Time	time	Defines a time; in this case, the TIME_VALUE_... elements have to be filled with values corresponding to the **dtDATETIME** data type.	2005fd
Week	week	Defines a week; in this case, the TIME_VALUE_... elements have to be filled with values ranging from 1 to 53.**dtDATETIME** data type.	2005fd
Year	year	Defines a year; in this case, the TIME_VALUE_... elements have to be filled with values corresponding to the **dtDATETIME** data type.	2005fd

Example
Refer also to the examples in the element **DELIVERY_TIMES**.

Copyright © 2022 BME e.V. - BMEcat® Version 2005.2
Copyright © 2010-2021 BME e.V. - BMEcat® Version 2005.1
Copyright © 2005-2009 BME e.V. - BMEcat® Version 2005
Copyright © 1998–2004 Fraunhofer IAO, Stuttgart; Universität Essen BLI - BMEcat® Version 1.2

TRANSPORT

(Transport)

This element contains information about the terms of transport.

2005fd: New element

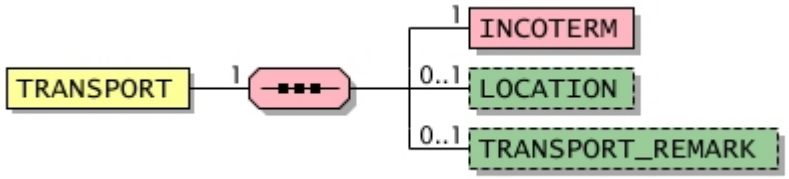

General					
Used in	Default value	Data type	Field length	Lang. specific	I.chg. in ver.
ARTICLE_LOGISTIC_DETAILS, **CATALOG**, **PRODUCT_LOGISTIC_DETAILS**	-	-	-	-	2005fd

Elements

Designation	Element name	Mandatory/ Optional	Single/ Multiple	Explanation	Default value	Data type	Field length	Lang. specific	I.chg. in ver.
INCOTERM	**INCOTERM**	Mandatory	Single	International coding of transport, costs and insurance according to INCOTERMS 2000, UN/ECE, Recommendation No.5 (ECE/TRADE/259), (see **http://www.unece.org/cefact/recommendations/rec05/rec05_ecetrd259.pdf**). 2005fd: New element	-	**dtSTRING**	3	-	2005fd
Location of goods transfer	**LOCATION**	Optional	Single	Transfer of the goods from supplier to buyer or vice versa. Dependent on **INCOTERM**. 2005fd: New element	-	**dtSTRING**	250	-	2005fd
Remark	**TRANSPORT_REMARK**	Optional	Single	Remark concerning the type of transport. 2005fd: New element	-	**dtMLSTRING**	64000	Yes	2005fd

Copyright © 2022 BME e.V. - BMEcat® Version 2005.2
Copyright © 2010-2021 BME e.V. - BMEcat® Version 2005.1
Copyright © 2005-2009 BME e.V. - BMEcat® Version 2005
Copyright © 1998–2004 Fraunhofer IAO, Stuttgart; Universität Essen BLI - BMEcat® Version 1.2

SUPPLIER_IDREF

(Reference to supplier)

This element contains the unique identifier (**PARTY_ID**) of the respective party that is defined in the document (element **PARTY**).

2005fd: This new element together with the **PARTY** replaces the **SUPPLIER** element.

General						
Used in	Default value	Data type	Field length	Lang. specific	l.chg. in ver.	
AGREEMENT, **ARTICLE** in context T_NEW_CATALOG, **ARTICLE** in context T_UPDATE_PRICES, **ARTICLE** in context T_UPDATE_PRODUCTS, **ARTICLE_ORDER_DETAILS**, **ARTICLE_REFERENCE**, **ARTICLE_TO_CATALOGGROUP_MAP**in context T_NEW_CATALOG, **ARTICLE_TO_CATALOGGROUP_MAP**in context T_NEW_CATALOG, **CATALOG**, **HEADER**, **PACKING_UNIT**, **PART_ALTERNATIVE**, **PRODUCT** in context T_NEW_CATALOG, **PRODUCT** in context T_UPDATE_PRICES, **PRODUCT** in context T_UPDATE_PRODUCTS, **PRODUCT_ORDER_DETAILS**, **PRODUCT_REFERENCE**, **PRODUCT_TO_CATALOGGROUP_MAP** in context T_NEW_CATALOG, **PRODUCT_TO_CATALOGGROUP_MAP** in context T_UPDATE_PRODUCTS	-	**dtSTRING**	250	-	2005fd	

Attributes								
Designation	Attribute name	Mandatory/ optional	Explanation	Default value	Data type	Field length	Lang. specific	l.chg. in ver.
Coding standard	type	Optional	This attribute is used to state the coding standard to which the identifier (**PARTY_ID**) adheres. The most common coding standards are predefined. See also: **Predefined values for attribute "type"**	-	**dtSTRING**	250	-	1.2_fd

Predefined values for attribute "type"			
Designation	Attribute value	Explanation	l.chg. in ver.
Buyer-specific number	buyer_specific	Identification number defined by the buyer	-
Customer specific number	customer_specific	Identification number defined by the customer	2005fd
Dun & Bradstreet	duns	DUNS-Number (see also **http://dbuk.dnb.com/english/DataBase/duns.htm**)	-
Global location number	iln	Internationally called GLN (see GLN below)	-
Global location number	gln	Global Location Number GLN (see also **http://www.ean-int.org/locations.html**)	2005fd
Party-specific number	party_specific	Identification number defined by the respective party	2005fd

Copyright © 2022 BME e.V. - BMEcat® Version 2005.2
Copyright © 2010-2021 BME e.V. - BMEcat® Version 2005.1
Copyright © 2005-2009 BME e.V. - BMEcat® Version 2005
Copyright © 1998–2004 Fraunhofer IAO, Stuttgart; Universität Essen BLI - BMEcat® Version 1.2

Predefined values for attribute "type"			
Designation	Attribute value	Explanation	l.chg. in ver.
Supplier-specific number	supplier_specific	Identification number defined by the supplier	-
Other codification standard	User defined value, format: \w{1,250}	Identificator of codification standard. "\w{1,250}" means that the identificator of the codification standard has to be at least 1 chraracter long up to a maximum of 250 characters.	-

Copyright © 2022 BME e.V. - BMEcat® Version 2005.2
Copyright © 2010-2021 BME e.V. - BMEcat® Version 2005.1
Copyright © 2005-2009 BME e.V. - BMEcat® Version 2005
Copyright © 1998–2004 Fraunhofer IAO, Stuttgart; Universität Essen BLI - BMEcat® Version 1.2

BUYER_IDREF

(Reference to the buyer)

This element contains a reference to the buyer. The reference has to point to a (**PARTY_ID**) that is defined in the document (**PARTY** element).

2005fd: This new element replaces together with the **PARTY** element the **BUYER** element.

General					
Used in	Default value	Data type	Field length	Lang. specific	l.chg. in ver.
HEADER	-	**dtSTRING**	250	-	2005fd

Attributes								
Designation	Attribute name	Mandatory/ optional	Explanation	Default value	Data type	Field length	Lang. specific	l.chg. in ver.
Coding standard	type	Optional	This attribute is used to state the coding standard to which the identifier (**PARTY_ID**) adheres. The most common coding standards are predefined. See also: **Predefined values for attribute "type"**	-	**dtSTRING**	250	-	1.2_fd

Predefined values for attribute "type"			
Designation	Attribute value	Explanation	l.chg. in ver.
Buyer-specific number	buyer_specific	Identification number defined by the buyer	-
Customer specific number	customer_specific	Identification number defined by the customer	2005fd
Dun & Bradstreet	duns	DUNS-Number (see also **http://dbuk.dnb.com/english/DataBase/duns.htm**)	-
Global location number	iln	Internationally called GLN (see GLN below)	-
Global location number	gln	Global Location Number GLN (see also **http://www.ean-int.org/locations.html**)	2005fd
Party-specific number	party_specific	Identification number defined by the respective party	2005fd
Supplier-specific number	supplier_specific	Identification number defined by the supplier	-

Copyright © 2022 BME e.V. - BMEcat® Version 2005.2
Copyright © 2010-2021 BME e.V. - BMEcat® Version 2005.1
Copyright © 2005-2009 BME e.V. - BMEcat® Version 2005
Copyright © 1998–2004 Fraunhofer IAO, Stuttgart; Universität Essen BLI - BMEcat® Version 1.2

Predefined values for attribute "type"			
Designation	Attribute value	Explanation	l.chg. in ver.
Other codification standard	User defined value, format: \w{1,250}	Identificator of codification standard. "\w{1,250}" means that the identificator of the codification standard has to be at least 1 chraracter long up to a maximum of 250 characters.	-

Copyright © 2022 BME e.V. - BMEcat® Version 2005.2
Copyright © 2010-2021 BME e.V. - BMEcat® Version 2005.1
Copyright © 2005-2009 BME e.V. - BMEcat® Version 2005
Copyright © 1998–2004 Fraunhofer IAO, Stuttgart; Universität Essen BLI - BMEcat® Version 1.2

BUYER

(Buyer information)

This element contains information on the buyer.

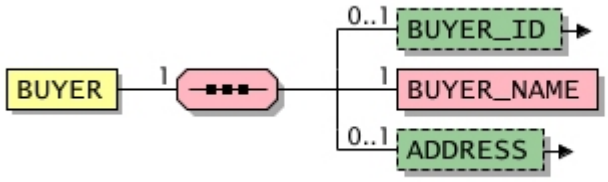

General					
Used in	Default value	Data type	Field length	Lang. specific	l.chg. in ver.
HEADER	-	-	-	-	-

Elements

Designation	Element name	Mandatory/ Optional	Single/ Multiple	Explanation	Default value	Data type	Field length	Lang. specific	l.chg. in ver.
ID of the buying company	**BUYER_ID** **- type**	Optional	Single	Unique number of the buying company; the optional attribute "type" determines the type of ID. *	-	**dtSTRING**	250	-	2005fd
Name of the buyer	**BUYER_NAME**	Mandatory	Single	Name of the buying company or organization	-	**dtSTRING**	50	-	-
Address	**ADDRESS** in context BUYER **- type**	Optional	Single	Address information of a business partner *	-	-	-	-	2005

Example

```
<BUYER>
    <BUYER_ID>1234</BUYER_ID>
    <BUYER_NAME>MyBestCustomer Inc.</BUYER_NAME>
    <ADDRESS type="buyer">
        <NAME>MyBestCustomer Inc.</NAME>
        <DEPARTMENT>Global Procurement</DEPARTMENT>
        <STREET>35 E. Fullerton</STREET>
        <ZIP>60618</ZIP>
        <CITY>Chicago</CITY>
```

Copyright © 2022 BME e.V. - BMEcat® Version 2005.2
Copyright © 2010-2021 BME e.V. - BMEcat® Version 2005.1
Copyright © 2005-2009 BME e.V. - BMEcat® Version 2005
Copyright © 1998–2004 Fraunhofer IAO, Stuttgart; Universität Essen BLI - BMEcat® Version 1.2

```
        <COUNTRY>USA</COUNTRY>
        <COUNTRY_CODED>US</COUNTRY_CODED>
        <PHONE type="office">+1 800 243 4646</PHONE>
        <FAX type="office">+1 800 243 4848</FAX>
        <EMAIL>procurement@mybestcustomer.com</EMAIL>
        <URL>http://www.mybestcustomer.com</URL>
    </ADDRESS>
</BUYER>
```

Copyright © 2022 BME e.V. - BMEcat® Version 2005.2
Copyright © 2010-2021 BME e.V. - BMEcat® Version 2005.1
Copyright © 2005-2009 BME e.V. - BMEcat® Version 2005
Copyright © 1998–2004 Fraunhofer IAO, Stuttgart; Universität Essen BLI - BMEcat® Version 1.2

BUYER_ID

(ID of the buying company)

This element contains the unique number of the buying company; the optional attribute "type" determines the type of ID.

2005fd: The maximum length has been extended from 50 characters to 250 characters.

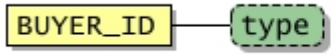

General					
Used in	Default value	Data type	Field length	Lang. specific	l.chg. in ver.
BUYER	-	**dtSTRING**	250	-	2005fd

Attributes								
Designation	Attribute name	Mandatory/ optional	Explanation	Default value	Data type	Field length	Lang. specific	l.chg. in ver.
Coding standard	type	Optional	This attribute is used to state the coding standard to which the identifier (**PARTY_ID**) adheres. The most common coding standards are predefined. See also: **Predefined values for attribute "type"**	-	**dtSTRING**	250	-	1.2_fd

Predefined values for attribute "type"			
Designation	Attribute value	Explanation	l.chg. in ver.
Buyer-specific number	buyer_specific	Identification number defined by the buyer	-
Customer specific number	customer_specific	Identification number defined by the customer	2005fd
Dun & Bradstreet	duns	DUNS-Number (see also **http://dbuk.dnb.com/english/DataBase/duns.htm**)	-
Global location number	iln	Internationally called GLN (see GLN below)	-
Global location number	gln	Global Location Number GLN (see also **http://www.ean-int.org/locations.html**)	2005fd
Party-specific number	party_specific	Identification number defined by the respective party	2005fd
Supplier-specific number	supplier_specific	Identification number defined by the supplier	-

Copyright © 2022 BME e.V. - BMEcat® Version 2005.2
Copyright © 2010-2021 BME e.V. - BMEcat® Version 2005.1
Copyright © 2005-2009 BME e.V. - BMEcat® Version 2005
Copyright © 1998–2004 Fraunhofer IAO, Stuttgart; Universität Essen BLI - BMEcat® Version 1.2

Predefined values for attribute "type"			
Designation	Attribute value	Explanation	l.chg. in ver.
Other codification standard	User defined value, format: \w{1,250}	Identificator of codification standard. "\w{1,250}" means that the identificator of the codification standard has to be at least 1 chraracter long up to a maximum of 250 characters.	-

Copyright © 2022 BME e.V. - BMEcat® Version 2005.2
Copyright © 2010-2021 BME e.V. - BMEcat® Version 2005.1
Copyright © 2005-2009 BME e.V. - BMEcat® Version 2005
Copyright © 1998–2004 Fraunhofer IAO, Stuttgart; Universität Essen BLI - BMEcat® Version 1.2

ADDRESS in context BUYER

(Address)

This element is used to transfer address information of a business partner.

2005fd: This element has been extended by the following sub-elements: **DEPARTMENT**, **CONTACT_DETAILS**, **VAT_ID**; the sub-element **EMAIL** may occur more than once if the e-mail address comes with an element **PUBLIC_KEY**.
2005: The sub-elements **PHONE** und **FAX** may occure more than once, due to their type-attribute.

Copyright © 2022 BME e.V. - BMEcat® Version 2005.2
Copyright © 2010-2021 BME e.V. - BMEcat® Version 2005.1
Copyright © 2005-2009 BME e.V. - BMEcat® Version 2005
Copyright © 1998–2004 Fraunhofer IAO, Stuttgart; Universität Essen BLI - BMEcat® Version 1.2

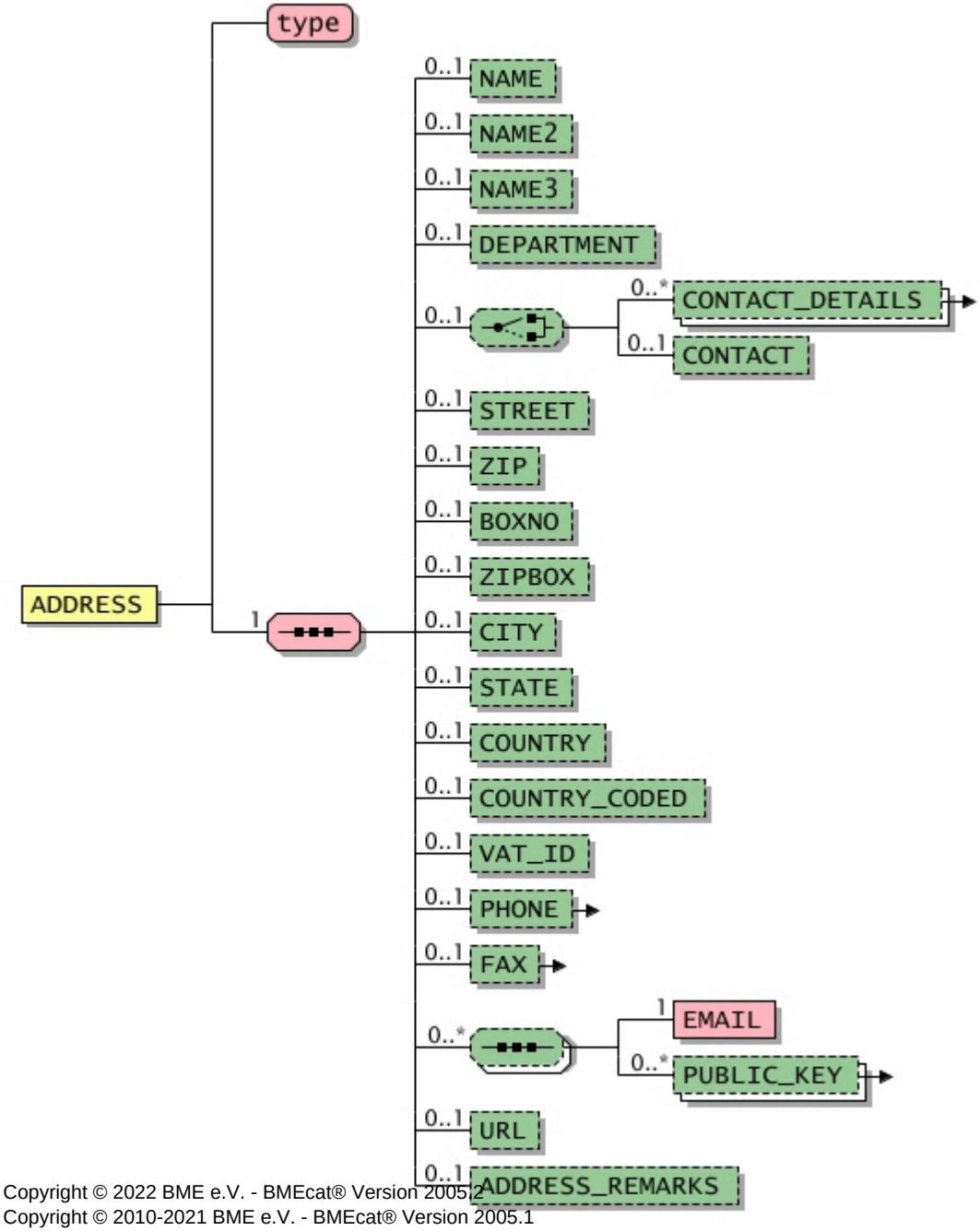

Copyright © 2022 BME e.V. - BMEcat® Version 2005.2
Copyright © 2010-2021 BME e.V. - BMEcat® Version 2005.1
Copyright © 2005-2009 BME e.V. - BMEcat® Version 2005
Copyright © 1998–2004 Fraunhofer IAO, Stuttgart; Universität Essen BLI - BMEcat® Version 1.2

General

Used in	Default value	Data type	Field length	Lang. specific	l.chg. in ver.
BUYER	-	-	-	-	2005

Attributes

Designation	Attribute name	Mandatory/ optional	Explanation	Default value	Data type	Field length	Lang. specific	l.chg. in ver.
Address type	type	Mandatory	Contains the address type See also: **Permitted values for attribute "type"**	-	**dtSTRING**	20	-	-

Permitted values for attribute "type"

Designation	Attribute value	Explanation	l.chg. in ver.
Buyer	buyer	The address belongs to a buyer (buying company).	-

Elements

Designation	Element name	Mandatory/ Optional	Single/ Multiple	Explanation	Default value	Data type	Field length	Lang. specific	l.chg. in ver.
Address line	**NAME**	Optional	Single	First address line, in most cases the name of the organisation	-	**dtMLSTRING**	50	Yes	-
Address line 2	**NAME2**	Optional	Single	additional space for address information	-	**dtMLSTRING**	50	Yes	-
Address line 3	**NAME3**	Optional	Single	additional space for address information	-	**dtMLSTRING**	50	Yes	-
Department	**DEPARTMENT**	Optional	Single	Department of the organisation 2005fd: New element	-	**dtMLSTRING**	50	Yes	2005fd
Contact	**CONTACT_DETAILS**	Optional	Multiple	Information on a contact person 	-	-	-	-	2005
Contact name	**CONTACT**	Optional	Single	This element contains the name of the contact person.	-	**dtMLSTRING**	50	Yes	-
Street	**STREET**	Optional	Single	Street name and house number	-	**dtMLSTRING**	50	Yes	-
Zip code	**ZIP**	Optional	Single	ZIP code of address	-	**dtMLSTRING**	20	Yes	-
P.O. Box	**BOXNO**	Optional	Single	P.O. box number	-	**dtMLSTRING**	20	Yes	-
Zip code of P.O. Box	**ZIPBOX**	Optional	Single	ZIP code of P.O. box	-	**dtMLSTRING**	20	Yes	-
Town or city	**CITY**	Optional	Single	Town or city of the company	-	**dtMLSTRING**	50	Yes	-
Federal state	**STATE**	Optional	Single	Federal state, e.g., Michigan	-	**dtMLSTRING**	50	Yes	-

Copyright © 2022 BME e.V. - BMEcat® Version 2005.2
Copyright © 2010-2021 BME e.V. - BMEcat® Version 2005.1
Copyright © 2005-2009 BME e.V. - BMEcat® Version 2005
Copyright © 1998–2004 Fraunhofer IAO, Stuttgart; Universität Essen BLI - BMEcat® Version 1.2

Elements

Designation	Element name	Mandatory/ Optional	Single/ Multiple	Explanation	Default value	Data type	Field length	Lang. specific	l.chg. in ver.
Country	**COUNTRY**	Optional	Single	Country, e.g., France	-	**dtMLSTRING**	50	Yes	-
Country code	**COUNTRY_CODED**	Optional	Single	Country code, e.g. FR for France 2005fd: New element	-	**dtCOUNTRIES**	-	-	2005fd
VAT-ID	**VAT_ID**	Optional	Single	VAT identification number of the business partner 2005fd: New element	-	**dtSTRING**	50	-	2005fd
Phone number	**PHONE** **- type**	Optional	Single	Phone number including type	-	**dtMLSTRING**	50	Yes	2005fd
Fax number	**FAX** **- type**	Optional	Single	Fax number	-	**dtMLSTRING**	50	Yes	-
E-mail address	**EMAIL**	Mandatory	Single	e-mail address 2005fd: The maximum length has been extended from 100 characters to 250 characters.	-	**dtSTRING**	255	-	2005fd
Public key	**PUBLIC_KEY** **- type**	Optional	Multiple	Public key, e.g. PGP	-	**dtSTRING**	64000	-	1.2_fd
Internet address	**URL**	Optional	Single	URL of the web site, e.g., http://www.bmecat.org 2005fd: The maximum length has been extended from 100 characters to 250 characters.	-	**dtSTRING**	255	-	2005fd
Remarks	**ADDRESS_REMARKS**	Optional	Single	Remarks on the organization	-	**dtMLSTRING**	250	Yes	-

Example

```
<ADDRESS type="buyer">
    <NAME>University of Duisburg-Essen</NAME>
    <NAME2>Institute for Computer Science and Business Information Systems</NAME2>
    <DEPARTMENT>Department of Procurement, Logistics and Information Management</DEPARTMENT>
    <CONTACT_DETAILS>
        <CONTACT_NAME>Schmitz</CONTACT_NAME>
        <FIRST_NAME>Volker</FIRST_NAME>
        <TITLE>Mr.</TITLE>
```

Copyright © 2022 BME e.V. - BMEcat® Version 2005.2
Copyright © 2010-2021 BME e.V. - BMEcat® Version 2005.1
Copyright © 2005-2009 BME e.V. - BMEcat® Version 2005
Copyright © 1998–2004 Fraunhofer IAO, Stuttgart; Universität Essen BLI - BMEcat® Version 1.2

```
        <PHONE type="office">+49 201 183 4084</PHONE>
        <EMAIL>volker.schmitz@uni-essen.de</EMAIL>
    </CONTACT_DETAILS>
    <STREET>Universitaetsstr. 9</STREET>
    <ZIP>45141</ZIP>
    <ZIPBOX>45117</ZIPBOX>
    <CITY>Essen</CITY>
    <COUNTRY>Germany</COUNTRY>
    <COUNTRY_CODED>DE</COUNTRY_CODED>
    <PHONE>+49 201 183 4076</PHONE>
    <FAX>+49 201 183 4081</FAX>
    <URL>http://www.bli.uni-essen.de/english</URL>
</ADDRESS>
```

Copyright © 2022 BME e.V. - BMEcat® Version 2005.2
Copyright © 2010-2021 BME e.V. - BMEcat® Version 2005.1
Copyright © 2005-2009 BME e.V. - BMEcat® Version 2005
Copyright © 1998–2004 Fraunhofer IAO, Stuttgart; Universität Essen BLI - BMEcat® Version 1.2

CONTACT_DETAILS

(Contact)

This element contains information on a contact person.

2005fd: New element
2005: The sub-elements **PHONE** und **FAX** may occure more than once, due to their type-attribute.

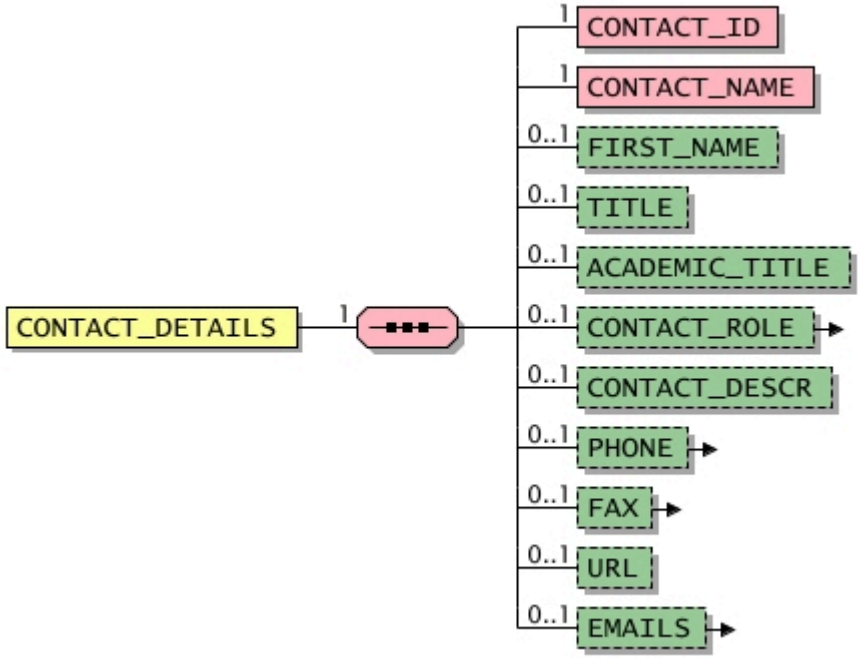

General					
Used in	Default value	Data type	Field length	Lang. specific	l.chg. in ver.
ADDRESS, **ADDRESS** in context BUYER, **ADDRESS** in context SUPPLIER	-	-	-	-	2005

Copyright © 2022 BME e.V. - BMEcat® Version 2005.2
Copyright © 2010-2021 BME e.V. - BMEcat® Version 2005.1
Copyright © 2005-2009 BME e.V. - BMEcat® Version 2005
Copyright © 1998–2004 Fraunhofer IAO, Stuttgart; Universität Essen BLI - BMEcat® Version 1.2

Elements

Designation	Element name	Mandatory/ Optional	Single/ Multiple	Explanation	Default value	Data type	Field length	Lang. specific	l.chg. in ver.
Contact ID	**CONTACT_ID**	Mandatory	Single	Unique ID of the contact person. 2005fd: New element 2005: The maximum length has been extended from 50 characters to 60 characters.	-	**dtSTRING**	60	-	2005
Contact name	**CONTACT_NAME**	Mandatory	Single	Last name of the contact 2005fd: New element	-	**dtMLSTRING**	50	Yes	2005fd
First name	**FIRST_NAME**	Optional	Single	First name of the contact person	-	**dtMLSTRING**	50	Yes	-
Title	**TITLE**	Optional	Single	Form of address, e.g., Mr., Ms. 2005fd: New element	-	**dtMLSTRING**	20	Yes	2005fd
Academic title	**ACADEMIC_TITLE**	Optional	Single	Academic title of the contact person, e.g., Dr. 2005fd: New element	-	**dtMLSTRING**	50	Yes	2005fd
Role	**CONTACT_ROLE** **- type**	Optional	Single	Role or position of a contact 	-	**dtMLSTRING**	50	Yes	2005fd
Contact description	**CONTACT_DESCR**	Optional	Single	Additional information on the contact person 2005fd: New element	-	**dtMLSTRING**	250	Yes	2005fd
Phone number	**PHONE** **- type**	Optional	Single	Phone number including type 	-	**dtMLSTRING**	50	Yes	2005fd
Fax number	**FAX** **- type**	Optional	Single	Fax number	-	**dtMLSTRING**	50	Yes	-
Internet address	**URL**	Optional	Single	URL of the web site, e.g., http://www.bmecat.org 2005fd: The maximum length has been extended from 100 characters to 250 characters.	-	**dtSTRING**	255	-	2005fd
E-mail addresses	**EMAILS**	Optional	Single	List of e-mail addresses	-	-	-	-	2005fd

Copyright © 2022 BME e.V. - BMEcat® Version 2005.2
Copyright © 2010-2021 BME e.V. - BMEcat® Version 2005.1
Copyright © 2005-2009 BME e.V. - BMEcat® Version 2005
Copyright © 1998–2004 Fraunhofer IAO, Stuttgart; Universität Essen BLI - BMEcat® Version 1.2

Elements									
Designation	Element name	Mandatory/ Optional	Single/ Multiple	Explanation	Default value	Data type	Field length	Lang. specific	l.chg. in ver.

Copyright © 2022 BME e.V. - BMEcat® Version 2005.2
Copyright © 2010-2021 BME e.V. - BMEcat® Version 2005.1
Copyright © 2005-2009 BME e.V. - BMEcat® Version 2005
Copyright © 1998–2004 Fraunhofer IAO, Stuttgart; Universität Essen BLI - BMEcat® Version 1.2

CONTACT_ROLE

(Role)

This element describes the role or position of the contact person.

2005fd: New element

General					
Used in	Default value	Data type	Field length	Lang. specific	l.chg. in ver.
CONTACT_DETAILS	-	**dtMLSTRING**	50	Yes	2005fd

Attributes								
Designation	Attribute name	Mandatory/ optional	Explanation	Default value	Data type	Field length	Lang. specific	l.chg. in ver.
Coded role	type	Optional	This attribute contains the role or position as a machine-readable code. See also: **Permitted values for attribute "type"**	-	**dtSTRING**	20	-	2005fd

Permitted values for attribute "type"			
Designation	Attribute value	Explanation	l.chg. in ver.
Administrative	administrativ	Contact concerning administrative questions	2005fd
Commercial	commercial	Contact concerning commercial questions	2005fd
Special treatment	special_treatment	Contact concerning the handling of special products	2005fd
Technical	technical	Contact concerning technical questions	2005fd
Other	others	Contact concerning general questions	2005fd

Copyright © 2022 BME e.V. - BMEcat® Version 2005.2
Copyright © 2010-2021 BME e.V. - BMEcat® Version 2005.1
Copyright © 2005-2009 BME e.V. - BMEcat® Version 2005
Copyright © 1998–2004 Fraunhofer IAO, Stuttgart; Universität Essen BLI - BMEcat® Version 1.2

PHONE

(Phone number)

This element contains a phone number. The respective attribute defines the type of the phone.

2005fd: The maximum length has been extended from 30 characters to 50 characters.

General					
Used in	Default value	Data type	Field length	Lang. specific	l.chg. in ver.
ADDRESS, **ADDRESS** in context BUYER, **ADDRESS** in context SUPPLIER, **CONTACT_DETAILS**	-	**dtMLSTRING**	50	Yes	2005fd

Attributes								
Designation	Attribute name	Mandatory/ optional	Explanation	Default value	Data type	Field length	Lang. specific	l.chg. in ver.
Type of phone number	type	Optional	Specifies the type of the phone number. 2005fd: New attribute See also: **Predefined values for attribute "type"**	-	**dtSTRING**	50	-	2005fd

Predefined values for attribute "type"			
Designation	Attribute value	Explanation	l.chg. in ver.
Mobile telephone	mobile	Mobile phone number	2005fd
Office	office	Office phone number	2005fd
Private	private	Private phone number	2005fd
Self-defined type	User defined value, format: \w{1,50}	Phone types may be self-defined and have to be 1 character at the minimum and not more than 50 characters.	2005fd

Example

```
<PHONE type="office">+49 201 183 4084</PHONE>
```

Copyright © 2022 BME e.V. - BMEcat® Version 2005.2
Copyright © 2010-2021 BME e.V. - BMEcat® Version 2005.1
Copyright © 2005-2009 BME e.V. - BMEcat® Version 2005
Copyright © 1998–2004 Fraunhofer IAO, Stuttgart; Universität Essen BLI - BMEcat® Version 1.2

```
<PHONE type="private">+49 201 12345678</PHONE>
<PHONE type="mobile">+49 170 12345678</PHONE>
```

Copyright © 2022 BME e.V. - BMEcat® Version 2005.2
Copyright © 2010-2021 BME e.V. - BMEcat® Version 2005.1
Copyright © 2005-2009 BME e.V. - BMEcat® Version 2005
Copyright © 1998–2004 Fraunhofer IAO, Stuttgart; Universität Essen BLI - BMEcat® Version 1.2

FAX

(Fax number)

This element contains a fax number.

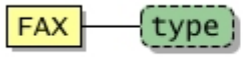

General					
Used in	Default value	Data type	Field length	Lang. specific	l.chg. in ver.
ADDRESS, **ADDRESS** in context BUYER, **ADDRESS** in context SUPPLIER, **CONTACT_DETAILS**	-	**dtMLSTRING**	50	Yes	-

Attributes								
Designation	Attribute name	Mandatory/ optional	Explanation	Default value	Data type	Field length	Lang. specific	l.chg. in ver.
Phone type	type	Optional	Specifies the type of the phone number. * 2005fd: New attribute See also: **Predefined values for attribute "type"**	-	**dtSTRING**	50	-	2005fd

Predefined values for attribute "type"			
Designation	Attribute value	Explanation	l.chg. in ver.
Office	office	Office fax number	2005fd
Private	private	Private fax number	2005fd
Self-defined type	User defined value, format: \w{1,50}	Fax types may be self-defined and have to be 1 character at the minimum and not more than 50 characters.	2005fd

Copyright © 2022 BME e.V. - BMEcat® Version 2005.2
Copyright © 2010-2021 BME e.V. - BMEcat® Version 2005.1
Copyright © 2005-2009 BME e.V. - BMEcat® Version 2005
Copyright © 1998–2004 Fraunhofer IAO, Stuttgart; Universität Essen BLI - BMEcat® Version 1.2

EMAILS

(E-mail addresses)

This element contains a list of e-mail addresses.

2005fd: New element

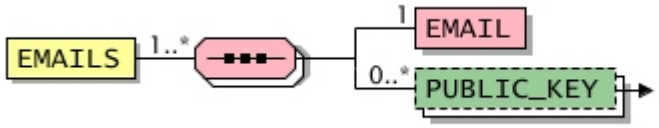

General					
Used in	Default value	Data type	Field length	Lang. specific	l.chg. in ver.
CONTACT_DETAILS	-	-	-	-	2005fd

Elements									
Designation	Element name	Mandatory/ Optional	Single/ Multiple	Explanation	Default value	Data type	Field length	Lang. specific	l.chg. in ver.
E-mail address	**EMAIL**	Mandatory	Single	e-mail address 2005fd: The maximum length has been extended from 100 characters to 250 characters.	-	**dtSTRING**	255	-	2005fd
Public key	**PUBLIC_KEY - type**	Optional	Multiple	Public key, e.g. PGP	-	**dtSTRING**	64000	-	1.2_fd

Copyright © 2022 BME e.V. - BMEcat® Version 2005.2
Copyright © 2010-2021 BME e.V. - BMEcat® Version 2005.1
Copyright © 2005-2009 BME e.V. - BMEcat® Version 2005
Copyright © 1998–2004 Fraunhofer IAO, Stuttgart; Universität Essen BLI - BMEcat® Version 1.2

PUBLIC_KEY

(Public key)

Indicates the public key, e.g. PGP, of the person addressed here.

General					
Used in	Default value	Data type	Field length	Lang. specific	l.chg. in ver.
ADDRESS, **ADDRESS** in context BUYER, **ADDRESS** in context SUPPLIER, **EMAILS**	-	**dtSTRING**	64000	-	1.2_fd

Attributes								
Designation	Attribute name	Mandatory/ optional	Explanation	Default value	Data type	Field length	Lang. specific	l.chg. in ver.
Type of coding process	type	Mandatory	This attribute indicates the Public Key coding process in which the e-mail is coded. Must comply with the format "<Name>-<MajorVersion>.<MinorVersions>". Example.: PGP-6.5.1	-	**dtSTRING**	50	-	1.2_fd

Copyright © 2022 BME e.V. - BMEcat® Version 2005.2
Copyright © 2010-2021 BME e.V. - BMEcat® Version 2005.1
Copyright © 2005-2009 BME e.V. - BMEcat® Version 2005
Copyright © 1998–2004 Fraunhofer IAO, Stuttgart; Universität Essen BLI - BMEcat® Version 1.2

AGREEMENT

(Reference to a skeleton agreement)

This element serves for referring to a skeleton agreement, which is relevant for the business document. Agreements which cannot be transported in the business document itself are regulated in this skeleton agreement.

2005fd: The element was revised and the following sub-elements were added: **AGREEMENT_LINE_ID**, **AGREEMENT_START_DATE**, **AGREEMENT_END_DATE**, **SUPPLIER_IDREF**, **AGREEMENT_DESCR**, **MIME_INFO**

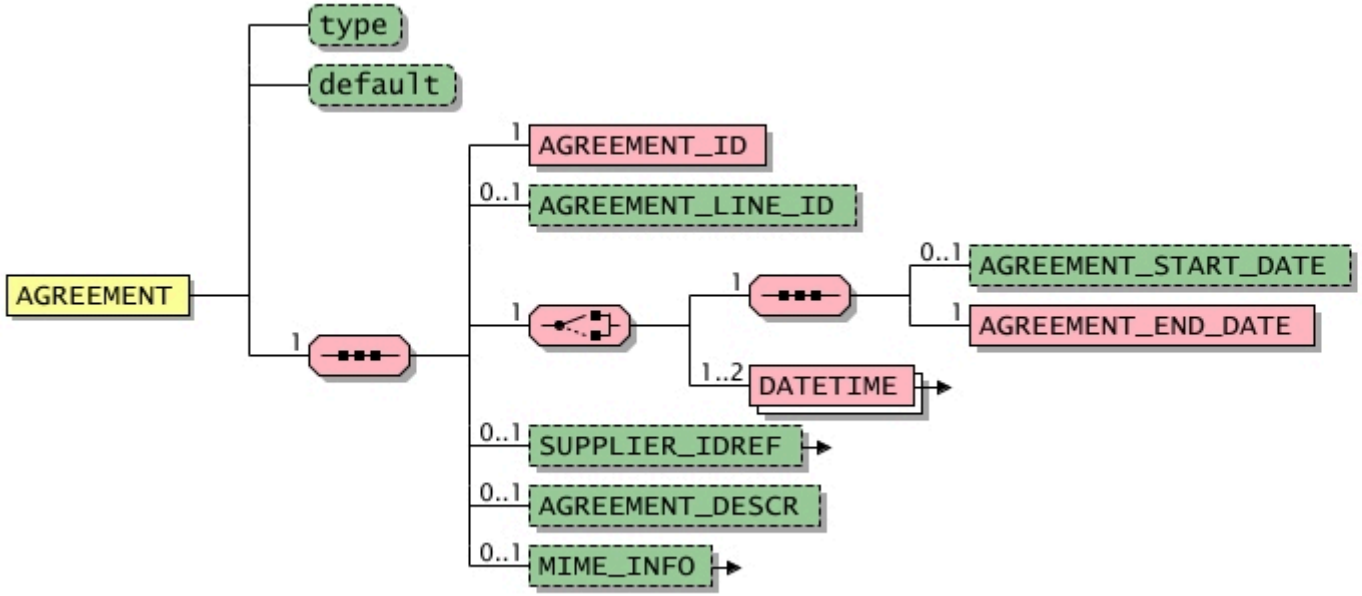

General					
Used in	Default value	Data type	Field length	Lang. specific	l.chg. in ver.
HEADER	-	-	-	-	2005fd

Copyright © 2022 BME e.V. - BMEcat® Version 2005.2
Copyright © 2010-2021 BME e.V. - BMEcat® Version 2005.1
Copyright © 2005-2009 BME e.V. - BMEcat® Version 2005
Copyright © 1998–2004 Fraunhofer IAO, Stuttgart; Universität Essen BLI - BMEcat® Version 1.2

Attributes

Designation	Attribute name	Mandatory/ optional	Explanation	Default value	Data type	Field length	Lang. specific	l.chg. in ver.
Agreement type	type	Optional	Owner of the skeleton agreement. If reference is made to skeleton agreements of an intermediary, the element value should point to the intermediary. Some target systems are not in a position to interpret other values than the pre-defined ones. 2005fd: New attribute See also: **Predefined values for attribute "type"**	-	**dtSTRING**	50	-	2005fd
Default flag	default	Optional	This attribute marks a standard agreement. 2005fd: New attribute	-	**dtBOOLEAN**	-	-	2005fd

Predefined values for attribute "type"

Designation	Attribute value	Explanation	l.chg. in ver.
Buyer	buyer	Marking for a buyer's skeleton agreement.	2005fd
Supplier	supplier	Marking for a supplier's skeleton agreement.	2005fd
User defined marking	User defined value, format: \w{1,50}	User defined marking. "\w{1,50}" means that the marking has to be at least 1 chraracter long up to a maximum of 50 characters.	2005fd

Elements

Designation	Element name	Mandatory/ Optional	Single/ Multiple	Explanation	Default value	Data type	Field length	Lang. specific	l.chg. in ver.
Skeleton agreement ID	**AGREEMENT_ID**	Mandatory	Single	Unique identifier of the skeleton agreement. The element can also be used for special agreement information, e.g. special project-related agreements.	-	**dtSTRING**	50	-	-
Line number within the skeleton agreement	**AGREEMENT_LINE_ID**	Optional	Single	Unique line number within a skeleton agreement. This element allows a unique reference to a line of a skeleton agreement. 2005fd: New element	-	**dtSTRING**	50	-	2005fd
Start date of the skeleton agreement	**AGREEMENT_START_ DATE**	Optional	Single	Unique time stamp of the time, when the skeleton agreement begins.	-	**dtDATETIME**	-	-	2005fd

Copyright © 2022 BME e.V. - BMEcat® Version 2005.2
Copyright © 2010-2021 BME e.V. - BMEcat® Version 2005.1
Copyright © 2005-2009 BME e.V. - BMEcat® Version 2005
Copyright © 1998–2004 Fraunhofer IAO, Stuttgart; Universität Essen BLI - BMEcat® Version 1.2

Elements

Designation	Element name	Mandatory/ Optional	Single/ Multiple	Explanation	Default value	Data type	Field length	Lang. specific	l.chg. in ver.
				2005fd: This element replaces with a modified semantics the former **DATETIME** in the context of AGREEMENT element and its type='agreement_start_date' attribute.					
End date of the skeleton agreement	**AGREEMENT_END_ DATE**	Mandatory	Single	Unique time stamp for the time when the skeleton agreement ends. 2005fd: This element replaces with a modified semantics the former **DATETIME** in the context of AGREEMENT element and its type='agreement_end_date' attribute.	-	**dtDATETIME**	-	-	2005fd
Date	**DATETIME** in the context of AGREEMENT **- type**	Mandatory	Multiple (2)	The element is used to precisely define a time. It is made up of the three elements date, time and time zone.	-	-	-	-	-
Reference to supplier	**SUPPLIER_IDREF - type**	Optional	Single	Reference to the supplier. It contains the unique identifier (**PARTY_ID**) of the respective party that is defined in the document (element **PARTY**).	-	**dtSTRING**	250	-	2005fd
Description of the skeleton agreement	**AGREEMENT_DESCR**	Optional	Single	This element is used to describe the skeleton agreement. 2005fd: New element	-	**dtSTRING**	250	-	2005fd
Additional multimedia information	**MIME_INFO**	Optional	Single	Information about multimedia files	-	-	-	-	-

Example

```
<AGREEMENT type="buyer">
    <AGREEMENT_ID>1003552/2005</AGREEMENT_ID>
    <AGREEMENT_LINE_ID>2</AGREEMENT_LINE_ID>
    <AGREEMENT_START_DATE>2005-01-01</AGREEMENT_START_DATE>
    <AGREEMENT_END_DATE>2005-12-31</AGREEMENT_END_DATE>
    <AGREEMENT_DESC>Office Supplies</AGREEMENT_DESC>
</AGREEMENT>
```

Copyright © 2022 BME e.V. - BMEcat® Version 2005.2
Copyright © 2010-2021 BME e.V. - BMEcat® Version 2005.1
Copyright © 2005-2009 BME e.V. - BMEcat® Version 2005
Copyright © 1998–2004 Fraunhofer IAO, Stuttgart; Universität Essen BLI - BMEcat® Version 1.2

DATETIME in the context of AGREEMENT

(Date)

The element is used to precisely define a time. It is made up of the three elements date, time and time zone.

DATETIME is used at various places within the BMEcat formats. The description of the time involved is carried out through the attribute '**type**' which can accept various pre-defined values.

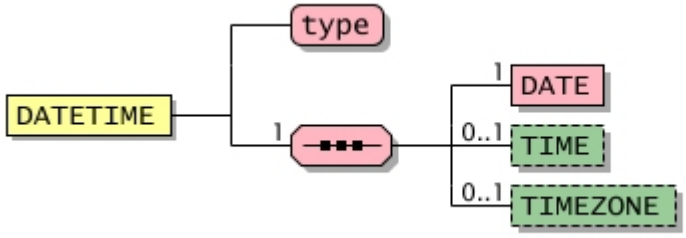

General					
Used in	Default value	Data type	Field length	Lang. specific	l.chg. in ver.
AGREEMENT	-	-	-	-	-

Attributes								
Designation	Attribute name	Mandatory/ optional	Explanation	Default value	Data type	Field length	Lang. specific	l.chg. in ver.
Date type	type	Mandatory	Specifies the date type in more detail.; Value range: depending on context See also: **Permitted values for attribute "type"**	-	**dtSTRING**	20	-	-

Permitted values for attribute "type"			
Designation	Attribute value	Explanation	l.chg. in ver.
Agreement start date	agreement_start_date	Date on which the skeleton agreement comes into effect; is used in the element **AGREEMENT**	-
Agreement end date	agreement_end_date	Date on which the skeleton agreement terminates; is used in the element **AGREEMENT**	-

Copyright © 2022 BME e.V. - BMEcat® Version 2005.2
Copyright © 2010-2021 BME e.V. - BMEcat® Version 2005.1
Copyright © 2005-2009 BME e.V. - BMEcat® Version 2005
Copyright © 1998–2004 Fraunhofer IAO, Stuttgart; Universität Essen BLI - BMEcat® Version 1.2

Elements									
Designation	Element name	Mandatory/ Optional	Single/ Multiple	Explanation	Default value	Data type	Field length	Lang. specific	l.chg. in ver.
Date	**DATE**	Mandatory	Single	Date	-	**dtDATETYPE**	-	-	-
Time	**TIME**	Optional	Single	Element for time	-	**dtTIMETYPE**	-	-	-
Time zone	**TIMEZONE**	Optional	Single	Element for timezone	-	**dtTIMEZONETYPE**	-	-	-

Example
The skeleton agreement comes into effect on 25 October, 2000 at 23:13 hrs GMT.

```
<DATETIME type="agreement_start_date">
    <DATE>2005-01-15</DATE>
    <TIME>12:00:00</TIME>
    <TIMEZONE>GMT</TIMEZONE>
</DATETIME>
```

Copyright © 2022 BME e.V. - BMEcat® Version 2005.2
Copyright © 2010-2021 BME e.V. - BMEcat® Version 2005.1
Copyright © 2005-2009 BME e.V. - BMEcat® Version 2005
Copyright © 1998–2004 Fraunhofer IAO, Stuttgart; Universität Essen BLI - BMEcat® Version 1.2

MIME_INFO

(Additional multimedia information)

This element can be used to specify references to additional multimedia documents belonging to a particular article. This makes it possible, for example, to reference photographs or product data sheets of an article at the same time as the catalog data is exchanged.

It is assumed that this additional data is transferred (separately) and that it is imported relative to the directory specified in the **HEADER** as **MIME_ROOT**.

This element can contain any number of **MIME** elements. Each of these elements represents exactly one reference to an additional document. The definition of the **MIME** element is based on the MIME format (Multipurpose Internet Mail Extensions). The MIME format serves to standardize data transfers over the Internet.

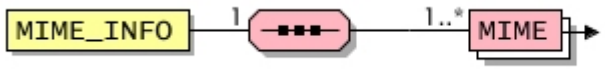

General					
Used in	Default value	Data type	Field length	Lang. specific	l.chg. in ver.
AGREEMENT, **AREA_LEGAL_INFO**, **ARTICLE** in context T_NEW_CATALOG, **ARTICLE** in context T_UPDATE_PRODUCTS, **CATALOG_STRUCTURE**, **CLASSIFICATION_GROUP**, **CLASSIFICATION_GROUP_FEATURE_TEMPLATE**, **CONFIG_FEATURE**, **FEATURE_CONTENT**, **FORMULA**, **FT_VALUE**, **PARTY**, **PRODUCT** in context T_NEW_CATALOG, **PRODUCT** in context T_UPDATE_PRODUCTS, **PRODUCT_REFERENCE**, **SUPPLIER**	-	-	-	-	-

Elements									
Designation	Element name	Mandatory/ Optional	Single/ Multiple	Explanation	Default value	Data type	Field length	Lang. specific	l.chg. in ver.
Multimedia document	**MIME**	Mandatory	Multiple	Information about a multimedia file. The file itself is only referenced and must be transferred separately.	-	-	-	-	-

Example

```
<MIME_INFO>
    <MIME>
        <MIME_TYPE>image/jpeg</MIME_TYPE>
        <MIME_SOURCE>55-K-31.jpg</MIME_SOURCE>
        <MIME_DESCR>Frontal view of the standard DIN A4 letter tray</MIME_DESCR>
        <MIME_ALT>Image of the standard DIN A4 letter tray</MIME_ALT>
        <MIME_PURPOSE>normal</MIME_PURPOSE>
    </MIME>
    <MIME>
        <MIME_TYPE>image/jpeg</MIME_TYPE>
        <MIME_SOURCE>55-K-31k.jpg</MIME_SOURCE>
        <MIME_DESCR>Frontal view of the standard DIN A4 letter tray</MIME_DESCR>
        <MIME_ALT>Image of the standard DIN A4 letter tray</MIME_ALT>
```

Copyright © 2022 BME e.V. - BMEcat® Version 2005.2
Copyright © 2010-2021 BME e.V. - BMEcat® Version 2005.1
Copyright © 2005-2009 BME e.V. - BMEcat® Version 2005
Copyright © 1998–2004 Fraunhofer IAO, Stuttgart; Universität Essen BLI - BMEcat® Version 1.2

```
        <MIME_PURPOSE>thumbnail</MIME_PURPOSE>
    </MIME>
    <MIME>
        <MIME_TYPE>application/pdf</MIME_TYPE>
        <MIME_SOURCE>office line 2001.pdf</MIME_SOURCE>
        <MIME_DESCR>Designation of the complete product line office line 2001</MIME_DESCR>
        <MIME_ALT>PDF file for office line 2001</MIME_ALT>
        <MIME_PURPOSE>others</MIME_PURPOSE>
    </MIME>
</MIME_INFO>
```

Copyright © 2022 BME e.V. - BMEcat® Version 2005.2
Copyright © 2010-2021 BME e.V. - BMEcat® Version 2005.1
Copyright © 2005-2009 BME e.V. - BMEcat® Version 2005
Copyright © 1998–2004 Fraunhofer IAO, Stuttgart; Universität Essen BLI - BMEcat® Version 1.2

MIME

(Multimedia document)

This element serves for transferring information about a multimedia file. The file itself is only referenced and must be transferred separately.

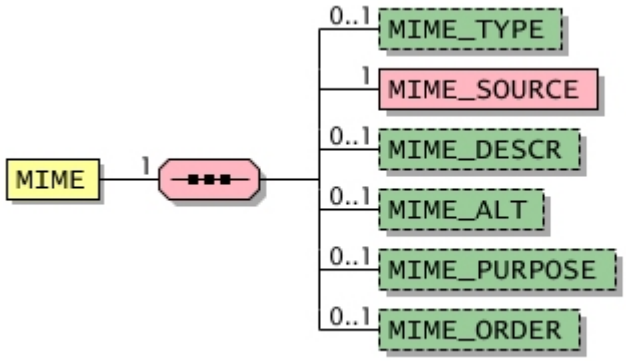

General					
Used in	Default value	Data type	Field length	Lang. specific	l.chg. in ver.
MIME_INFO	-	-	-	-	-

Elements

Designation	Element name	Mandatory/ Optional	Single/ Multiple	Explanation	Default value	Data type	Field length	Lang. specific	l.chg. in ver.
MIME type	**MIME_TYPE**	Optional	Single	Type of the additional document; this element is oriented towards the MIME type usual in the Internet (**https://datatracker.ietf.org/doc/html/rfc6838**). All registered MIME types can be used. But it is not guaranteed that the target system is able to process them. 2005.2: The type definition was changed, so that all allowed MIME typs are allowed values. The content of the attribute have to be formatted according to the following pattern. Pattern: **[-+.\w]+(\/[-+.\w]+)(;\s?[-+.\w]+=(([-+.\w]+)|("[-+.\w]+")))*|^url$**	-	**dtSTRING**	100	-	2005.2
Source	**MIME_SOURCE**	Mandatory	Single	The relative path and the file name or URL address. The MIME_SOURCE string is combined with the base path (**MIME_ROOT**) specified in the header of the document (attached to it by means of a simple contecatenation).	-	**dtMLSTRING**	255	Yes	-

Copyright © 2022 BME e.V. - BMEcat® Version 2005.2
Copyright © 2010-2021 BME e.V. - BMEcat® Version 2005.1
Copyright © 2005-2009 BME e.V. - BMEcat® Version 2005
Copyright © 1998–2004 Fraunhofer IAO, Stuttgart; Universität Essen BLI - BMEcat® Version 1.2

Elements									
Designation	Element name	Mandatory/ Optional	Single/ Multiple	Explanation	Default value	Data type	Field length	Lang. specific	l.chg. in ver.
				Sub-directories must be separated by means of slashes ("/") (e.g. /public/document/ demo.pdf).					
Designation	**MIME_DESCR**	Optional	Single	Description of the additional file. It will be displayed in the target system.	-	**dtMLSTRING**	250	Yes	-
Alternative text	**MIME_ALT**	Optional	Single	Alternative text used if the file cannot be represented in the target system, for example. 2005fd: The maximum length has been extended from 50 characters to 80 characters.	-	**dtMLSTRING**	80	Yes	2005fd
Purpose	**MIME_PURPOSE**	Optional	Single	Desired purpose for which the MIME document is to be used in the target system. 2005fd: The list of allowed values has been extended by 'icon' and 'safety_data_sheet'. See also: **Permitted values for element MIME_PURPOSE**	-	**dtSTRING**	20	-	2005fd
Order	**MIME_ORDER**	Optional	Single	Order in which the additional data is to be represented in the target system. When additional documents are listed they should be represented in ascending order (the first document is the one with the lowest number).	-	**dtINTEGER**	-	-	-

Permitted values for element MIME_PURPOSE			
Designation	Element value	Explanation	l.chg. in ver.
Product data sheet	data_sheet	Product data sheet (e.g., technical drawing)	-
Detail view	detail	Enlarged image	-
Icon	icon	Small icon, e.g, indicating the fullfilment of a standard 2005fd: New value	2005fd
Logo	logo	Product or supplier logo	1.2_fd
Normal view	normal	Normal view (normal size)	-
Safety data sheet	safety_data_sheet	Safety data sheet (for dangerous materials, for example) 2005fd: New value	2005fd
Thumbnail view	thumbnail	Preview (small)	-
Others	others	Should none of the other values be suitable, others can be used.	-

Copyright © 2022 BME e.V. - BMEcat® Version 2005.2
Copyright © 2010-2021 BME e.V. - BMEcat® Version 2005.1
Copyright © 2005-2009 BME e.V. - BMEcat® Version 2005
Copyright © 1998–2004 Fraunhofer IAO, Stuttgart; Universität Essen BLI - BMEcat® Version 1.2

Example
References to an image file and a product data sheet belonging to the “Charlie casual shirt” must be transferred at the same time as the product data is being exchanged.

```
<MIME_INFO>
    <MIME>
        <MIME_TYPE>image/jpeg</MIME_TYPE>
        <MIME_SOURCE>charlie.jpg</MIME_SOURCE>
        <MIME_DESCR>Front view of our casual shirt</MIME_DESCR>
        <MIME_ALT>Photo of Charlie</MIME_ALT>
        <MIME_PURPOSE>normal</MIME_PURPOSE>
    </MIME>
    <MIME>
        <MIME_TYPE>application/pdf</MIME_TYPE>
        <MIME_SOURCE>charlie.pdf</MIME_SOURCE>
        <MIME_DESCR>Designation of the production process</MIME_DESCR>
        <MIME_ALT>PDF file belonging to Charlie</MIME_ALT>
        <MIME_PURPOSE>data_sheet</MIME_PURPOSE>
    </MIME>
</MIME_INFO>
```

Copyright © 2022 BME e.V. - BMEcat® Version 2005.2
Copyright © 2010-2021 BME e.V. - BMEcat® Version 2005.1
Copyright © 2005-2009 BME e.V. - BMEcat® Version 2005
Copyright © 1998–2004 Fraunhofer IAO, Stuttgart; Universität Essen BLI - BMEcat® Version 1.2

LEGAL_INFO

(Legal information)

Legal information; the content can be defined for each area or country seperately.

2005fd: New element
2005: This element was named **LEGAL_INFORMATION** and is now named **LEGAL_INFO**. The sub-element **AREA_LEGAL_INFORMATION** was renamed to **AREA_LEGAL_INFO**.

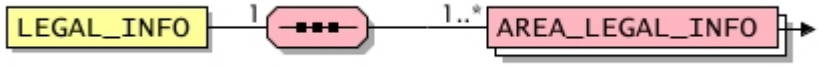

General					
Used in	Default value	Data type	Field length	Lang. specific	l.chg. in ver.
HEADER	-	-	-	-	2005

Elements									
Designation	Element name	Mandatory/ Optional	Single/ Multiple	Explanation	Default value	Data type	Field length	Lang. specific	l.chg. in ver.
Areas-specific legal information	**AREA_LEGAL_INFO**	Mandatory	Multiple	Legal information valid for an area or a country. Legal information may include 'General Terms of Delivery', information on the management, or the legal venue.	-	-	-	-	2005

Copyright © 2022 BME e.V. - BMEcat® Version 2005.2
Copyright © 2010-2021 BME e.V. - BMEcat® Version 2005.1
Copyright © 2005-2009 BME e.V. - BMEcat® Version 2005
Copyright © 1998–2004 Fraunhofer IAO, Stuttgart; Universität Essen BLI - BMEcat® Version 1.2

AREA_LEGAL_INFO

(Areas-specific legal information)

This element contains legal information valid for an area or a country. Legal information may include 'General Terms of Delivery', information on the management, or the legal venue.

2005fd: New element
2005: This element was named **AREA_LEGAL_INFORMATION** in BMEcat 2005fd and is now named **AREA_LEGAL_INFO**.

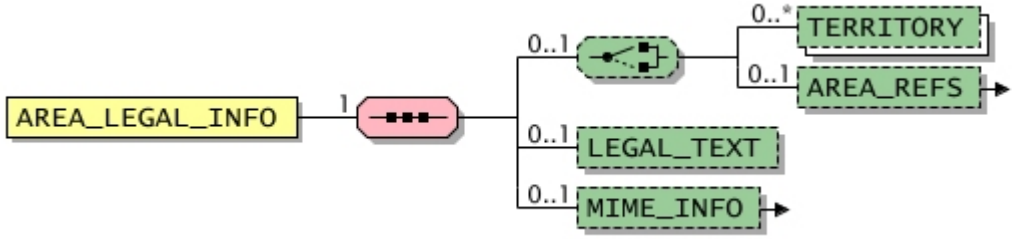

General					
Used in	Default value	Data type	Field length	Lang. specific	I.chg. in ver.
LEGAL_INFO	-	-	-	-	2005

Elements									
Designation	Element name	Mandatory/ Optional	Single/ Multiple	Explanation	Default value	Data type	Field length	Lang. specific	I.chg. in ver.
Territory	**TERRITORY**	Optional	Multiple	Territory (i.e. country, state, region) coded according to ISO 3166	-	**dtCOUNTRIES**	-	-	1.2_fd
Area references	**AREA_REFS**	Optional	Single	List of references to areas	-	-	-	-	2005fd
Legal text	**LEGAL_TEXT**	Optional	Single	Text of a legal information. This text can also be transferred as a file using the **MIME** element. 2005fd: New element	-	**dtMLSTRING**	64000	Yes	2005fd
Additional multimedia information	**MIME_INFO**	Optional	Single	Information about multimedia files	-	-	-	-	-

Copyright © 2022 BME e.V. - BMEcat® Version 2005.2
Copyright © 2010-2021 BME e.V. - BMEcat® Version 2005.1
Copyright © 2005-2009 BME e.V. - BMEcat® Version 2005
Copyright © 1998–2004 Fraunhofer IAO, Stuttgart; Universität Essen BLI - BMEcat® Version 1.2

SUPPLIER

(Supplier)

This element contains information on the supplier.

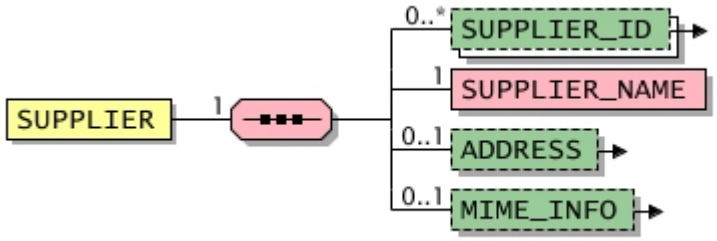

General					
Used in	Default value	Data type	Field length	Lang. specific	l.chg. in ver.
HEADER	-	-	-	-	-

Elements

Designation	Element name	Mandatory/ Optional	Single/ Multiple	Explanation	Default value	Data type	Field length	Lang. specific	l.chg. in ver.
Supplier ID	**SUPPLIER_ID** **- type**	Optional	Multiple	Unique identifier of the supplier, which can be used by the buyer for internal processes; the "type" attribute determines the ID type. *	-	**dtSTRING**	250	-	2005fd
Supplier name	**SUPPLIER_NAME**	Mandatory	Single	Name of the supplying company respectively organization	-	**dtSTRING**	50	-	-
Address	**ADDRESS** in context SUPPLIER **- type**	Optional	Single	Address information of a business partner *	-	-	-	-	2005
Additional multimedia information	**MIME_INFO**	Optional	Single	Information about multimedia files	-	-	-	-	-

Example

```
<SUPPLIER>
    <SUPPLIER_ID type="buyer_specific">UDE-2003151</SUPPLIER_ID>
    <SUPPLIER_NAME>Universal Inc.</SUPPLIER_NAME>
    <ADDRESS type="supplier">
```

Copyright © 2022 BME e.V. - BMEcat® Version 2005.2
Copyright © 2010-2021 BME e.V. - BMEcat® Version 2005.1
Copyright © 2005-2009 BME e.V. - BMEcat® Version 2005
Copyright © 1998–2004 Fraunhofer IAO, Stuttgart; Universität Essen BLI - BMEcat® Version 1.2

```
        <NAME>Universal Inc.</NAME>
        <STREET>324 Spring Street</STREET>
        <ZIP>10022-7510</ZIP>
        <CITY>New York</CITY>
        <COUNTRY>USA</COUNTRY>
        <COUNTRY_CODED>US</COUNTRY_CODED>
        <PHONE type="office">+1 1212-257-6838</PHONE>
        <FAX type="office">+1 1212-257-6839</FAX>
        <EMAIL>sales@universal-inc.com</EMAIL>
        <URL>http://www.universal-inc.com</URL>
    </ADDRESS>
    <MIME_INFO>
        <MIME>
            <MIME_TYPE>image/jpeg</MIME_TYPE>
            <MIME_SOURCE>logo_universal250.jpg</MIME_SOURCE>
            <MIME_PURPOSE>logo</MIME_PURPOSE>
        </MIME>
    </MIME_INFO>
</SUPPLIER>
```

Copyright © 2022 BME e.V. - BMEcat® Version 2005.2
Copyright © 2010-2021 BME e.V. - BMEcat® Version 2005.1
Copyright © 2005-2009 BME e.V. - BMEcat® Version 2005
Copyright © 1998–2004 Fraunhofer IAO, Stuttgart; Universität Essen BLI - BMEcat® Version 1.2

SUPPLIER_ID

(Supplier ID)

This element contains the unique identifier of the supplier, which can be used by the buyer for internal processes; the "type" attribute determines the ID type.

2005fd: The maximum length has been extended from 50 characters to 250 characters.

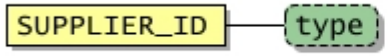

General					
Used in	Default value	Data type	Field length	Lang. specific	l.chg. in ver.
SUPPLIER	-	**dtSTRING**	250	-	2005fd

Attributes								
Designation	Attribute name	Mandatory/ optional	Explanation	Default value	Data type	Field length	Lang. specific	l.chg. in ver.
ID type Coding standard	type	Optional	This attribute is used to state the coding standard to which the identifier (**PARTY_ID**) adheres. The most common coding standards are predefined. See also: **Predefined values for attribute "type"**	-	**dtSTRING**	250	-	1.2_fd

Predefined values for attribute "type"			
Designation	Attribute value	Explanation	l.chg. in ver.
Buyer-specific number	buyer_specific	Identification number defined by the buyer	-
Customer specific number	customer_specific	Identification number defined by the customer	2005fd
Dun & Bradstreet	duns	DUNS-Number (see also **http://dbuk.dnb.com/english/DataBase/duns.htm**)	-
Global location number	iln	Internationally called GLN (see GLN below)	-
Global location number	gln	Global Location Number GLN (see also **http://www.ean-int.org/locations.html**)	2005fd
Party-specific number	party_specific	Identification number defined by the respective party	2005fd
Supplier-specific number	supplier_specific	Identification number defined by the supplier	-

Copyright © 2022 BME e.V. - BMEcat® Version 2005.2
Copyright © 2010-2021 BME e.V. - BMEcat® Version 2005.1
Copyright © 2005-2009 BME e.V. - BMEcat® Version 2005
Copyright © 1998–2004 Fraunhofer IAO, Stuttgart; Universität Essen BLI - BMEcat® Version 1.2

Predefined values for attribute "type"			
Designation	Attribute value	Explanation	l.chg. in ver.
Other codification standard	User defined value, format: \w{1,250}	Identificator of codification standard. "\w{1,250}" means that the identificator of the codification standard has to be at least 1 chraracter long up to a maximum of 250 characters.	-

Copyright © 2022 BME e.V. - BMEcat® Version 2005.2
Copyright © 2010-2021 BME e.V. - BMEcat® Version 2005.1
Copyright © 2005-2009 BME e.V. - BMEcat® Version 2005
Copyright © 1998–2004 Fraunhofer IAO, Stuttgart; Universität Essen BLI - BMEcat® Version 1.2

ADDRESS in context SUPPLIER

(Address)

This element is used to transfer address information of a business partner.

2005fd: This element has been extended by the following sub-elements: **DEPARTMENT**, **CONTACT_DETAILS**, **VAT_ID**; the sub-element **EMAIL** may occur more than once if the e-mail address comes with an element **PUBLIC_KEY**.
2005: The sub-elements **PHONE** und **FAX** may occure more than once, due to their type-attribute.

Copyright © 2022 BME e.V. - BMEcat® Version 2005.2
Copyright © 2010-2021 BME e.V. - BMEcat® Version 2005.1
Copyright © 2005-2009 BME e.V. - BMEcat® Version 2005
Copyright © 1998–2004 Fraunhofer IAO, Stuttgart; Universität Essen BLI - BMEcat® Version 1.2

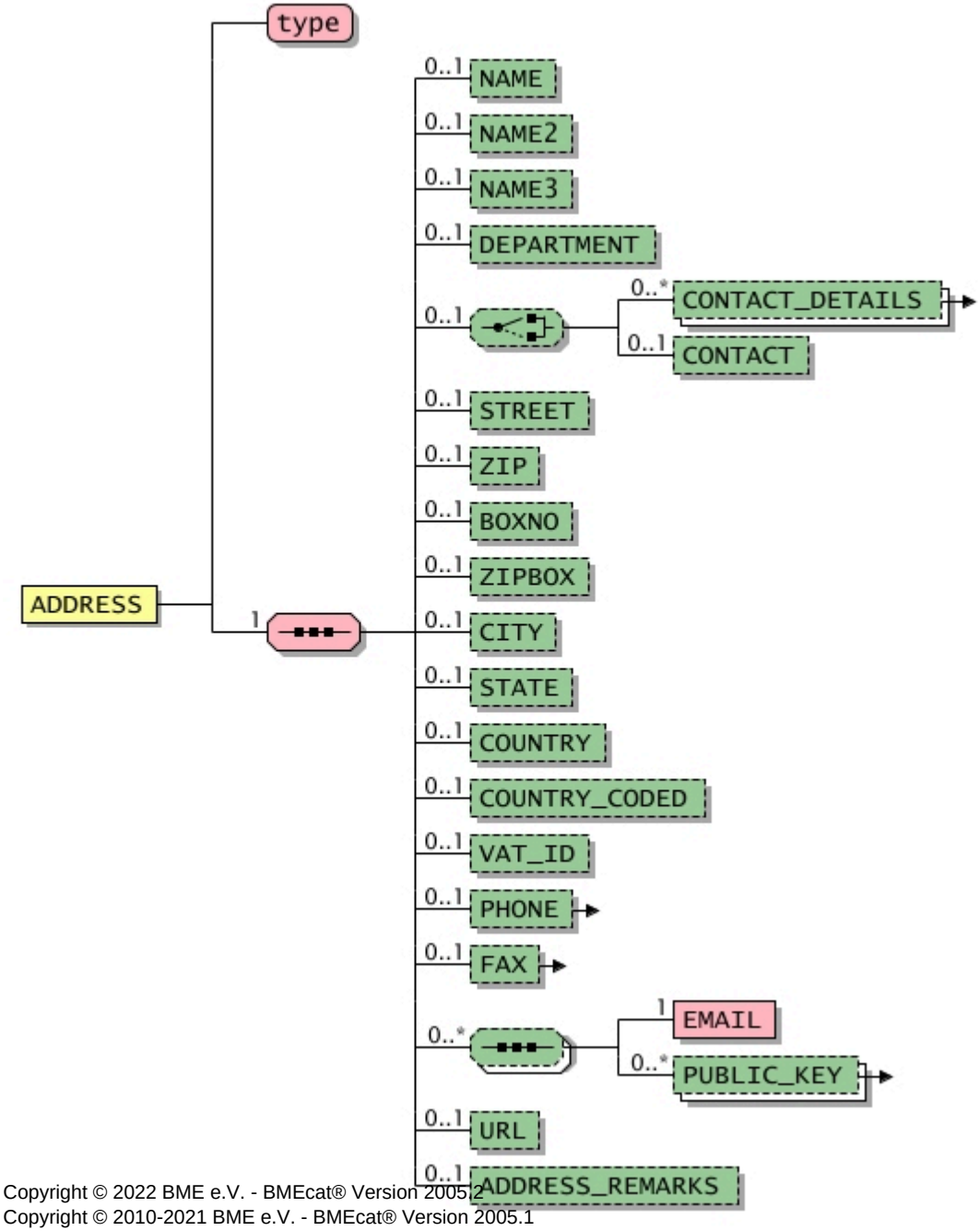

Copyright © 2022 BME e.V. - BMEcat® Version 2005.2
Copyright © 2010-2021 BME e.V. - BMEcat® Version 2005.1
Copyright © 2005-2009 BME e.V. - BMEcat® Version 2005
Copyright © 1998–2004 Fraunhofer IAO, Stuttgart; Universität Essen BLI - BMEcat® Version 1.2

General

Used in	Default value	Data type	Field length	Lang. specific	l.chg. in ver.
SUPPLIER	-	-	-	-	2005

Attributes

Designation	Attribute name	Mandatory/ optional	Explanation	Default value	Data type	Field length	Lang. specific	l.chg. in ver.
Address type	type	Mandatory	Contains the address type See also: **Permitted values for attribute "type"**	-	**dtSTRING**	20	-	-

Permitted values for attribute "type"

Designation	Attribute value	Explanation	l.chg. in ver.
Supplier	supplier	The address belongs to a supplier.	-

Elements

Designation	Element name	Mandatory/ Optional	Single/ Multiple	Explanation	Default value	Data type	Field length	Lang. specific	l.chg. in ver.
Address line	**NAME**	Optional	Single	First address line, in most cases the name of the organisation	-	**dtMLSTRING**	50	Yes	-
Address line 2	**NAME2**	Optional	Single	additional space for address information	-	**dtMLSTRING**	50	Yes	-
Address line 3	**NAME3**	Optional	Single	additional space for address information	-	**dtMLSTRING**	50	Yes	-
Department	**DEPARTMENT**	Optional	Single	Department of the organisation 2005fd: New element	-	**dtMLSTRING**	50	Yes	2005fd
Contact	**CONTACT_DETAILS**	Optional	Multiple	Information on a contact person 	-	-	-	-	2005
Contact name	**CONTACT**	Optional	Single	This element contains the name of the contact person.	-	**dtMLSTRING**	50	Yes	-
Street	**STREET**	Optional	Single	Street name and house number	-	**dtMLSTRING**	50	Yes	-
Zip code	**ZIP**	Optional	Single	ZIP code of address	-	**dtMLSTRING**	20	Yes	-
P.O. Box	**BOXNO**	Optional	Single	P.O. box number	-	**dtMLSTRING**	20	Yes	-
Zip code of P.O. Box	**ZIPBOX**	Optional	Single	ZIP code of P.O. box	-	**dtMLSTRING**	20	Yes	-
Town or city	**CITY**	Optional	Single	Town or city of the company	-	**dtMLSTRING**	50	Yes	-
Federal state	**STATE**	Optional	Single	Federal state, e.g., Michigan	-	**dtMLSTRING**	50	Yes	-

Copyright © 2022 BME e.V. - BMEcat® Version 2005.2
Copyright © 2010-2021 BME e.V. - BMEcat® Version 2005.1
Copyright © 2005-2009 BME e.V. - BMEcat® Version 2005
Copyright © 1998–2004 Fraunhofer IAO, Stuttgart; Universität Essen BLI - BMEcat® Version 1.2

Elements

Designation	Element name	Mandatory/ Optional	Single/ Multiple	Explanation	Default value	Data type	Field length	Lang. specific	l.chg. in ver.
Country	**COUNTRY**	Optional	Single	Country, e.g., France	-	**dtMLSTRING**	50	Yes	-
Country code	**COUNTRY_CODED**	Optional	Single	Country code, e.g. FR for France 2005fd: New element	-	**dtCOUNTRIES**	-	-	2005fd
VAT-ID	**VAT_ID**	Optional	Single	VAT identification number of the business partner 2005fd: New element	-	**dtSTRING**	50	-	2005fd
Phone number	**PHONE** **- type**	Optional	Single	Phone number including type 	-	**dtMLSTRING**	50	Yes	2005fd
Fax number	**FAX** **- type**	Optional	Single	Fax number	-	**dtMLSTRING**	50	Yes	-
E-mail address	**EMAIL**	Mandatory	Single	e-mail address 2005fd: The maximum length has been extended from 100 characters to 250 characters.	-	**dtSTRING**	255	-	2005fd
Public key	**PUBLIC_KEY** **- type**	Optional	Multiple	Public key, e.g. PGP	-	**dtSTRING**	64000	-	1.2_fd
Internet address	**URL**	Optional	Single	URL of the web site, e.g., http://www.bmecat.org 2005fd: The maximum length has been extended from 100 characters to 250 characters.	-	**dtSTRING**	255	-	2005fd
Remarks	**ADDRESS_REMARKS**	Optional	Single	Remarks on the organization	-	**dtMLSTRING**	250	Yes	-

Example

```
<ADDRESS type="supplier">
    <NAME>Universal GmbH</NAME>
    <STREET>Flughafenstrasse 15</STREET>
    <ZIP>45141</ZIP>
    <CITY>Essen</CITY>
    <COUNTRY>Germany</COUNTRY>
    <COUNTRY_CODED>DE</COUNTRY_CODED>
    <PHONE type="office">+49 201 444 882</PHONE>
```

Copyright © 2022 BME e.V. - BMEcat® Version 2005.2
Copyright © 2010-2021 BME e.V. - BMEcat® Version 2005.1
Copyright © 2005-2009 BME e.V. - BMEcat® Version 2005
Copyright © 1998–2004 Fraunhofer IAO, Stuttgart; Universität Essen BLI - BMEcat® Version 1.2

```
    <FAX type="office">+49 201 444 883</FAX>
    <EMAIL>vertrieb@universal-gmbh.de</EMAIL>
    <URL>http://www.universal-gmbh.de</URL>
</ADDRESS>
```

Copyright © 2022 BME e.V. - BMEcat® Version 2005.2
Copyright © 2010-2021 BME e.V. - BMEcat® Version 2005.1
Copyright © 2005-2009 BME e.V. - BMEcat® Version 2005
Copyright © 1998–2004 Fraunhofer IAO, Stuttgart; Universität Essen BLI - BMEcat® Version 1.2

DOCUMENT_CREATOR_IDREF

(Document creator)

This element contains a reference to the document creator. It contains the unique identifier (**PARTY_ID**) of the respective party that is defined in the document (element **PARTY**).

2005: New element

General					
Used in	Default value	Data type	Field length	Lang. specific	l.chg. in ver.
HEADER	-	**dtSTRING**	250	-	2005

Attributes								
Designation	Attribute name	Mandatory/ optional	Explanation	Default value	Data type	Field length	Lang. specific	l.chg. in ver.
Coding standard	type	Optional	This attribute is used to state the coding standard to which the identifier (**PARTY_ID**) adheres. The most common coding standards are predefined. See also: **Predefined values for attribute "type"**	-	**dtSTRING**	250	-	1.2_fd

Predefined values for attribute "type"			
Designation	Attribute value	Explanation	l.chg. in ver.
Buyer-specific number	buyer_specific	Identification number defined by the buyer	-
Customer specific number	customer_specific	Identification number defined by the customer	2005fd
Dun & Bradstreet	duns	DUNS-Number (see also **http://dbuk.dnb.com/english/DataBase/duns.htm**)	-
Global location number	iln	Internationally called GLN (see GLN below)	-
Global location number	gln	Global Location Number GLN (see also **http://www.ean-int.org/locations.html**)	2005fd
Party-specific number	party_specific	Identification number defined by the respective party	2005fd
Supplier-specific number	supplier_specific	Identification number defined by the supplier	-

Copyright © 2022 BME e.V. - BMEcat® Version 2005.2
Copyright © 2010-2021 BME e.V. - BMEcat® Version 2005.1
Copyright © 2005-2009 BME e.V. - BMEcat® Version 2005
Copyright © 1998–2004 Fraunhofer IAO, Stuttgart; Universität Essen BLI - BMEcat® Version 1.2

Predefined values for attribute "type"			
Designation	Attribute value	Explanation	l.chg. in ver.
Other codification standard	User defined value, format: \w{1,250}	Identificator of codification standard. "\w{1,250}" means that the identificator of the codification standard has to be at least 1 chraracter long up to a maximum of 250 characters.	-

Copyright © 2022 BME e.V. - BMEcat® Version 2005.2
Copyright © 2010-2021 BME e.V. - BMEcat® Version 2005.1
Copyright © 2005-2009 BME e.V. - BMEcat® Version 2005
Copyright © 1998–2004 Fraunhofer IAO, Stuttgart; Universität Essen BLI - BMEcat® Version 1.2

PARTIES

(Parties)

This element contains a list of parties that are relevant to this business document.

2005fd: New element

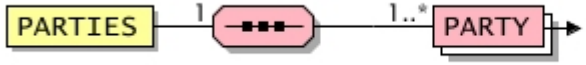

General					
Used in	Default value	Data type	Field length	Lang. specific	l.chg. in ver.
HEADER	-	-	-	-	2005fd

Elements									
Designation	Element name	Mandatory/ Optional	Single/ Multiple	Explanation	Default value	Data type	Field length	Lang. specific	l.chg. in ver.
Business partner	**PARTY**	Mandatory	Multiple	Information about the business partner.	-	-	-	-	2005fd

Copyright © 2022 BME e.V. - BMEcat® Version 2005.2
Copyright © 2010-2021 BME e.V. - BMEcat® Version 2005.1
Copyright © 2005-2009 BME e.V. - BMEcat® Version 2005
Copyright © 1998–2004 Fraunhofer IAO, Stuttgart; Universität Essen BLI - BMEcat® Version 1.2

PARTY

(Business partner)

This element contains information about a business partner.

If this element is used at least one of the following elements has to be specified.

2005fd: New element

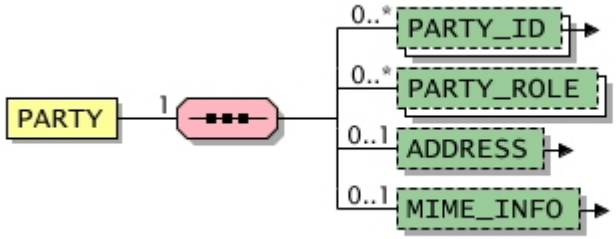

General					
Used in	Default value	Data type	Field length	Lang. specific	l.chg. in ver.
PARTIES	-	-	-	-	2005fd

Elements									
Designation	Element name	Mandatory/ Optional	Single/ Multiple	Explanation	Default value	Data type	Field length	Lang. specific	l.chg. in ver.
ID of the business partner	**PARTY_ID** **- type**	Optional	Multiple	Unique identifier of the business partner. **PARTY_ID** has to be specified if the **ADDRESS** element is not used in order to uniquely identify the business partner.	-	**dtSTRING**	250	-	2005fd
Role of the business partner	**PARTY_ROLE**	Optional	Multiple	Role of the business partner in the context of this document 2005fd: New element See also: **Permitted values for element PARTY_ROLE**	-	**dtSTRING**	20	-	2005fd
Address	**ADDRESS**	Optional	Single	Address information of a business partner	-	-	-	-	2005

Copyright © 2022 BME e.V. - BMEcat® Version 2005.2
Copyright © 2010-2021 BME e.V. - BMEcat® Version 2005.1
Copyright © 2005-2009 BME e.V. - BMEcat® Version 2005
Copyright © 1998–2004 Fraunhofer IAO, Stuttgart; Universität Essen BLI - BMEcat® Version 1.2

Elements									
Designation	Element name	Mandatory/ Optional	Single/ Multiple	Explanation	Default value	Data type	Field length	Lang. specific	l.chg. in ver.
Additional multimedia information	**MIME_INFO**	Optional	Single	Information about multimedia files	-	-	-	-	-

Permitted values for element PARTY_ROLE			
Designation	Element value	Explanation	l.chg. in ver.
Buyer	buyer	The business partner is a buyer.	2005fd
Document creator	document_creator	The business partner is the creator of the document.	2005fd
IPP operator	ipp_operator	The business partner operatores an IPP application.	2005fd
Manufacturer	manufacturer	The business partner is a manufacturer.	2005fd
Standardization body	standardization_body	The business partner is a standardization body.	2005fd
Supplier	supplier	The business partner is a supplier.	2005fd

Copyright © 2022 BME e.V. - BMEcat® Version 2005.2
Copyright © 2010-2021 BME e.V. - BMEcat® Version 2005.1
Copyright © 2005-2009 BME e.V. - BMEcat® Version 2005
Copyright © 1998–2004 Fraunhofer IAO, Stuttgart; Universität Essen BLI - BMEcat® Version 1.2

PARTY_ID

(ID of the business partner)

This element contains the unique identifier of the business partner. **PARTY_ID** has to be specified if the **ADDRESS** element is not used in order to uniquely identify the business partner.

2005fd: New element

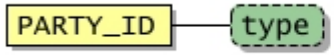

General					
Used in	Default value	Data type	Field length	Lang. specific	l.chg. in ver.
PARTY	-	**dtSTRING**	250	-	2005fd

Attributes								
Designation	Attribute name	Mandatory/ optional	Explanation	Default value	Data type	Field length	Lang. specific	l.chg. in ver.
Coding standard	type	Optional	This attribute is used to state the coding standard to which the identifier (**PARTY_ID**) adheres. The most common coding standards are predefined. See also: **Predefined values for attribute "type"**	-	**dtSTRING**	250	-	1.2_fd

Predefined values for attribute "type"			
Designation	Attribute value	Explanation	l.chg. in ver.
Buyer-specific number	buyer_specific	Identification number defined by the buyer	-
Customer specific number	customer_specific	Identification number defined by the customer	2005fd
Dun & Bradstreet	duns	DUNS-Number (see also **http://dbuk.dnb.com/english/DataBase/duns.htm**)	-
Global location number	iln	Internationally called GLN (see GLN below)	-
Global location number	gln	Global Location Number GLN (see also **http://www.ean-int.org/locations.html**)	2005fd
Party-specific number	party_specific	Identification number defined by the respective party	2005fd
Supplier-specific number	supplier_specific	Identification number defined by the supplier	-

Copyright © 2022 BME e.V. - BMEcat® Version 2005.2
Copyright © 2010-2021 BME e.V. - BMEcat® Version 2005.1
Copyright © 2005-2009 BME e.V. - BMEcat® Version 2005
Copyright © 1998–2004 Fraunhofer IAO, Stuttgart; Universität Essen BLI - BMEcat® Version 1.2

Predefined values for attribute "type"			
Designation	Attribute value	Explanation	l.chg. in ver.
Other codification standard	User defined value, format: \w{1,250}	Identificator of codification standard. "\w{1,250}" means that the identificator of the codification standard has to be at least 1 chraracter long up to a maximum of 250 characters.	-

Copyright © 2022 BME e.V. - BMEcat® Version 2005.2
Copyright © 2010-2021 BME e.V. - BMEcat® Version 2005.1
Copyright © 2005-2009 BME e.V. - BMEcat® Version 2005
Copyright © 1998–2004 Fraunhofer IAO, Stuttgart; Universität Essen BLI - BMEcat® Version 1.2

ADDRESS

(Address)

This element is used to transfer address information of a business partner.

2005fd: This element has been extended by the following sub-elements: **DEPARTMENT**, **CONTACT_DETAILS**, **VAT_ID**; the sub-element **EMAIL** may occur more than once if the e-mail address comes with an element **PUBLIC_KEY**.
2005: The sub-elements **PHONE** und **FAX** may occure more than once, due to their type-attribute.

Copyright © 2022 BME e.V. - BMEcat® Version 2005.2
Copyright © 2010-2021 BME e.V. - BMEcat® Version 2005.1
Copyright © 2005-2009 BME e.V. - BMEcat® Version 2005
Copyright © 1998–2004 Fraunhofer IAO, Stuttgart; Universität Essen BLI - BMEcat® Version 1.2

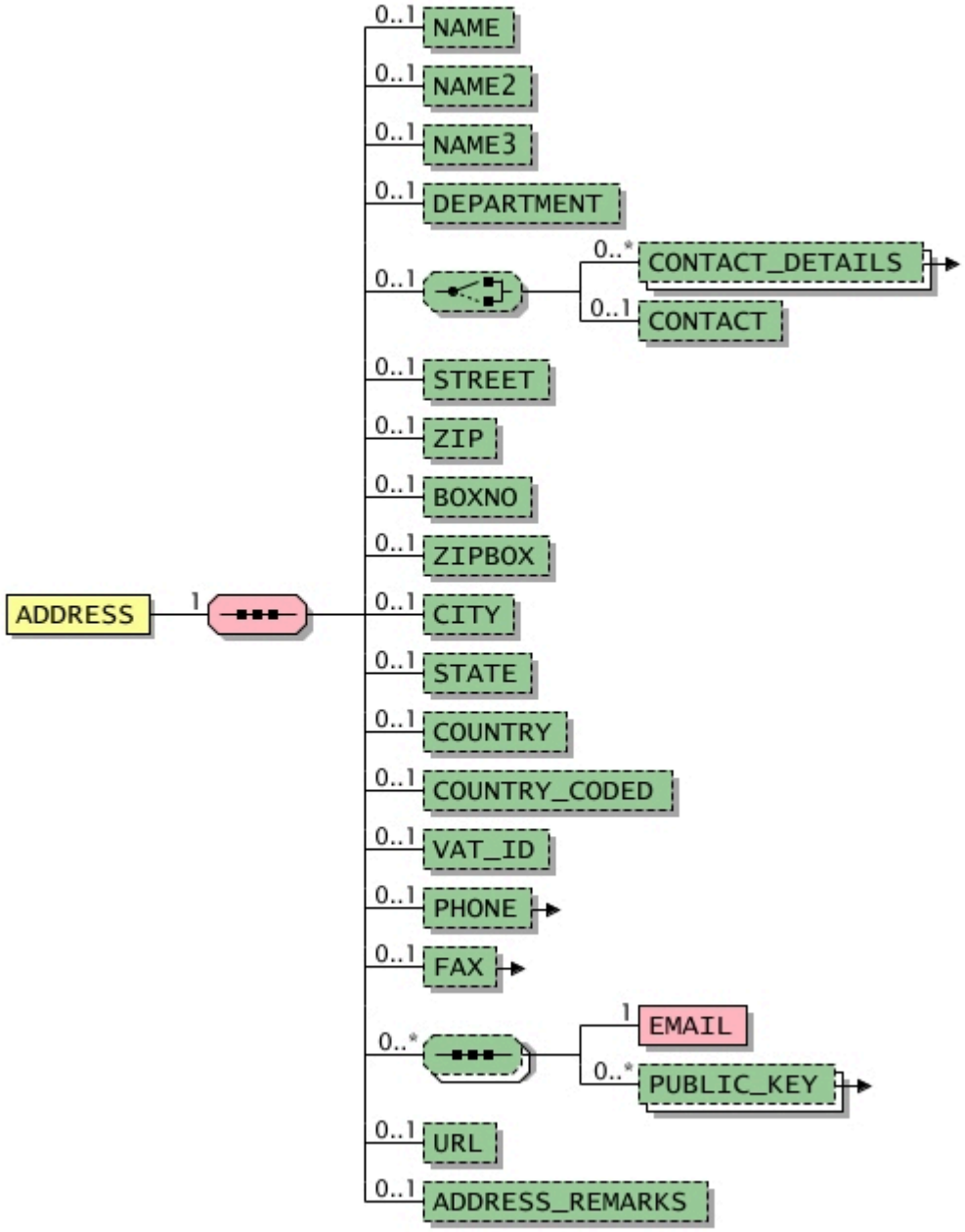

Copyright © 2022 BME e.V. - BMEcat® Version 2005.2
Copyright © 2010-2021 BME e.V. - BMEcat® Version 2005.1
Copyright © 2005-2009 BME e.V. - BMEcat® Version 2005
Copyright © 1998–2004 Fraunhofer IAO, Stuttgart; Universität Essen BLI - BMEcat® Version 1.2

General

Used in	Default value	Data type	Field length	Lang. specific	l.chg. in ver.
PARTY	-	-	-	-	2005

Elements

Designation	Element name	Mandatory/ Optional	Single/ Multiple	Explanation	Default value	Data type	Field length	Lang. specific	l.chg. in ver.
Address line	**NAME**	Optional	Single	First address line, in most cases the name of the organisation	-	**dtMLSTRING**	50	Yes	-
Address line 2	**NAME2**	Optional	Single	additional space for address information	-	**dtMLSTRING**	50	Yes	-
Address line 3	**NAME3**	Optional	Single	additional space for address information	-	**dtMLSTRING**	50	Yes	-
Department	**DEPARTMENT**	Optional	Single	Department of the organisation 2005fd: New element	-	**dtMLSTRING**	50	Yes	2005fd
Contact	**CONTACT_DETAILS**	Optional	Multiple	Information on a contact person 	-	-	-	-	2005
Contact name	**CONTACT**	Optional	Single	This element contains the name of the contact person.	-	**dtMLSTRING**	50	Yes	-
Street	**STREET**	Optional	Single	Street name and house number	-	**dtMLSTRING**	50	Yes	-
Zip code	**ZIP**	Optional	Single	ZIP code of address	-	**dtMLSTRING**	20	Yes	-
P.O. Box	**BOXNO**	Optional	Single	P.O. box number	-	**dtMLSTRING**	20	Yes	-
Zip code of P.O. Box	**ZIPBOX**	Optional	Single	ZIP code of P.O. box	-	**dtMLSTRING**	20	Yes	-
Town or city	**CITY**	Optional	Single	Town or city of the company	-	**dtMLSTRING**	50	Yes	-
Federal state	**STATE**	Optional	Single	Federal state, e.g., Michigan	-	**dtMLSTRING**	50	Yes	-
Country	**COUNTRY**	Optional	Single	Country, e.g., France	-	**dtMLSTRING**	50	Yes	-
Country code	**COUNTRY_CODED**	Optional	Single	Country code, e.g. FR for France 2005fd: New element	-	**dtCOUNTRIES**	-	-	2005fd
VAT-ID	**VAT_ID**	Optional	Single	VAT identification number of the business partner 2005fd: New element	-	**dtSTRING**	50	-	2005fd
Phone number	**PHONE** **- type**	Optional	Single	Phone number including type	-	**dtMLSTRING**	50	Yes	2005fd

Copyright © 2022 BME e.V. - BMEcat® Version 2005.2
Copyright © 2010-2021 BME e.V. - BMEcat® Version 2005.1
Copyright © 2005-2009 BME e.V. - BMEcat® Version 2005
Copyright © 1998–2004 Fraunhofer IAO, Stuttgart; Universität Essen BLI - BMEcat® Version 1.2

Elements

Designation	Element name	Mandatory/ Optional	Single/ Multiple	Explanation	Default value	Data type	Field length	Lang. specific	l.chg. in ver.
				*					
Fax number	**FAX - type**	Optional	Single	Fax number	-	**dtMLSTRING**	50	Yes	-
E-mail address	**EMAIL**	Mandatory	Single	e-mail address * 2005fd: The maximum length has been extended from 100 characters to 250 characters.	-	**dtSTRING**	255	-	2005fd
Public key	**PUBLIC_KEY - type**	Optional	Multiple	Public key, e.g. PGP	-	**dtSTRING**	64000	-	1.2_fd
Internet address	**URL**	Optional	Single	URL of the web site, e.g., http://www.bmecat.org * 2005fd: The maximum length has been extended from 100 characters to 250 characters.	-	**dtSTRING**	255	-	2005fd
Remarks	**ADDRESS_REMARKS**	Optional	Single	Remarks on the organization	-	**dtMLSTRING**	250	Yes	-

Example

```
<ADDRESS>
    <NAME>University of Duisburg-Essen</NAME>
    <NAME2>Department of Procurement, Logistics and Information Management</NAME2>
    <CONTACT>Volker Schmitz</CONTACT>
    <STREET>Universitaetsstr. 9</STREET>
    <ZIP>45141</ZIP>
    <BOXNO>45117</BOXNO>
    <CITY>Essen</CITY>
    <COUNTRY>Germany</COUNTRY>
    <PHONE>+49 201 183 4084</PHONE>
    <FAX>+49 201 183 934084</FAX>
    <EMAIL>volker.schmitz@uni-essen.de</EMAIL>
    <URL>http://www.bli.uni-essen.de/english</URL>
</ADDRESS>
```

Copyright © 2022 BME e.V. - BMEcat® Version 2005.2
Copyright © 2010-2021 BME e.V. - BMEcat® Version 2005.1
Copyright © 2005-2009 BME e.V. - BMEcat® Version 2005
Copyright © 1998–2004 Fraunhofer IAO, Stuttgart; Universität Essen BLI - BMEcat® Version 1.2

AREAS

(Areas)

This element contains a list of areas.

2005fd: New element

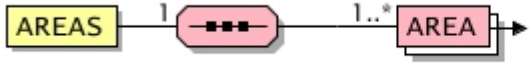

General					
Used in	Default value	Data type	Field length	Lang. specific	l.chg. in ver.
HEADER	-	-	-	-	2005fd

Elements									
Designation	Element name	Mandatory/ Optional	Single/ Multiple	Explanation	Default value	Data type	Field length	Lang. specific	l.chg. in ver.
Area	**AREA**	Mandatory	Multiple	Defines an area by merging multiple countries or regions (**TERRITORY**) to a unit, e.g. 'European Union' or 'Business Services Middle East'.	-	-	-	-	2005fd

Copyright © 2022 BME e.V. - BMEcat® Version 2005.2
Copyright © 2010-2021 BME e.V. - BMEcat® Version 2005.1
Copyright © 2005-2009 BME e.V. - BMEcat® Version 2005
Copyright © 1998–2004 Fraunhofer IAO, Stuttgart; Universität Essen BLI - BMEcat® Version 1.2

AREA

(Area)

This element defines an area by merging multiple countries or regions (**TERRITORY**) to a unit, e.g. 'European Union' or 'Business Services Middle East'.

2005fd: New element

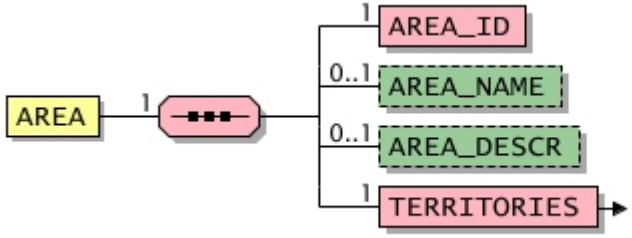

General					
Used in	Default value	Data type	Field length	Lang. specific	l.chg. in ver.
AREAS	-	-	-	-	2005fd

Elements

Designation	Element name	Mandatory/ Optional	Single/ Multiple	Explanation	Default value	Data type	Field length	Lang. specific	l.chg. in ver.
Area Identification	**AREA_ID**	Mandatory	Single	Unique identifier of the area 2005fd: New element	-	**dtSTRING**	60	-	2005fd
Name of the area	**AREA_NAME**	Optional	Single	Name of the area, e.g., "European Union" 2005fd: New element	-	**dtMLSTRING**	100	Yes	2005fd
Description of the area	**AREA_DESCR**	Optional	Single	This element can be used to describe the area in more detail. 2005fd: New element	-	**dtMLSTRING**	250	Yes	2005fd
Countries and regions	**TERRITORIES**	Mandatory	Single	List of countries and regions	-	-	-	-	2005fd

Copyright © 2022 BME e.V. - BMEcat® Version 2005.2
Copyright © 2010-2021 BME e.V. - BMEcat® Version 2005.1
Copyright © 2005-2009 BME e.V. - BMEcat® Version 2005
Copyright © 1998–2004 Fraunhofer IAO, Stuttgart; Universität Essen BLI - BMEcat® Version 1.2

Elements									
Designation	Element name	Mandatory/ Optional	Single/ Multiple	Explanation	Default value	Data type	Field length	Lang. specific	l.chg. in ver.

Copyright © 2022 BME e.V. - BMEcat® Version 2005.2
Copyright © 2010-2021 BME e.V. - BMEcat® Version 2005.1
Copyright © 2005-2009 BME e.V. - BMEcat® Version 2005
Copyright © 1998–2004 Fraunhofer IAO, Stuttgart; Universität Essen BLI - BMEcat® Version 1.2

TERRITORIES

(Countries and regions)

This element contains a list of countries and regions; each country or region is stored in a **TERRITORY** element.

2005fd: New element

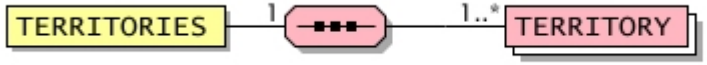

General						
Used in	Default value	Data type	Field length	Lang. specific	l.chg. in ver.	
AREA	-	-	-	-	2005fd	

Elements									
Designation	Element name	Mandatory/ Optional	Single/ Multiple	Explanation	Default value	Data type	Field length	Lang. specific	l.chg. in ver.
Territory	**TERRITORY**	Mandatory	Multiple	Territory (i.e. country, state, region) coded according to ISO 3166	-	**dtCOUNTRIES**	-	-	1.2_fd

Copyright © 2022 BME e.V. - BMEcat® Version 2005.2
Copyright © 2010-2021 BME e.V. - BMEcat® Version 2005.1
Copyright © 2005-2009 BME e.V. - BMEcat® Version 2005
Copyright © 1998–2004 Fraunhofer IAO, Stuttgart; Universität Essen BLI - BMEcat® Version 1.2

T_NEW_CATALOG

(Transaction area 'new catalog')

This transaction is used to transfer a new product catalog. Therefore all the elements specified in the BMEcat standard can be used (with the exception of **T_UPDATE_PRODUCTS** and **T_UPDATE_PRICES**).

With the **T_NEW_CATALOG** transaction the target system reacts to the transferred data as follows depending on the **CATALOG_ID**, **CATALOG_VERSION** and **LANGUAGE** received:

<table>
<tr><td colspan="4">Is the CATALOG_ID of the respective supplier (SUPPLIER_NAME) already present in the target system?</td></tr>
<tr><td colspan="3">Yes</td><td>No</td></tr>
<tr><td colspan="3">Is the CATALOG_VERSION in the target system identical?</td><td rowspan="5">A new catalog is created and all data imported.</td></tr>
<tr><td colspan="2">Yes</td><td>No</td></tr>
<tr><td colspan="2">Ist die Sprache (LANGUAGE) im Zielsystem vorhanden?</td><td rowspan="3">A new version of the existing catalog is created and all data imported.</td></tr>
<tr><td>Yes</td><td>No</td></tr>
<tr><td>Acceptance of the catalog will be refused by the target system and a corresponding error message given.</td><td>The new language will be added to the existing catalog and all language-specific data imported.</td></tr>
</table>

When the **T_NEW_CATALOG** transaction is used, the **CATALOG_VERSION** new and the "**T_NEW_CATALOG -->prev_version**" must be set to 0 at the next other transaction type (**T_UPDATE_PRODUCTS**, **T_UPDATE_PRICES**). See also: Example (**combination of different transactions**).

2005fd: The element was revised and the following sub-elements were added: **PARTIES**, **AREAS**, **FORMULAS**, **IPP_DEFINITIONS**, **MODULES**, **PRODUCT** in context T_NEW_CATALOG, **PRODUCT_TO_CATALOGGROUP_MAP** in context T_NEW_CATALOG; the sub-element **FEATURE_SYSTEM** has been removed.
2005: The sub-elements **PARTIES** and **AREAS** were moved to **HEADER**. The **MODULES** element, which had been added in BMEcat 2005 final draft, was removed again.

Copyright © 2022 BME e.V. - BMEcat® Version 2005.2
Copyright © 2010-2021 BME e.V. - BMEcat® Version 2005.1
Copyright © 2005-2009 BME e.V. - BMEcat® Version 2005
Copyright © 1998–2004 Fraunhofer IAO, Stuttgart; Universität Essen BLI - BMEcat® Version 1.2

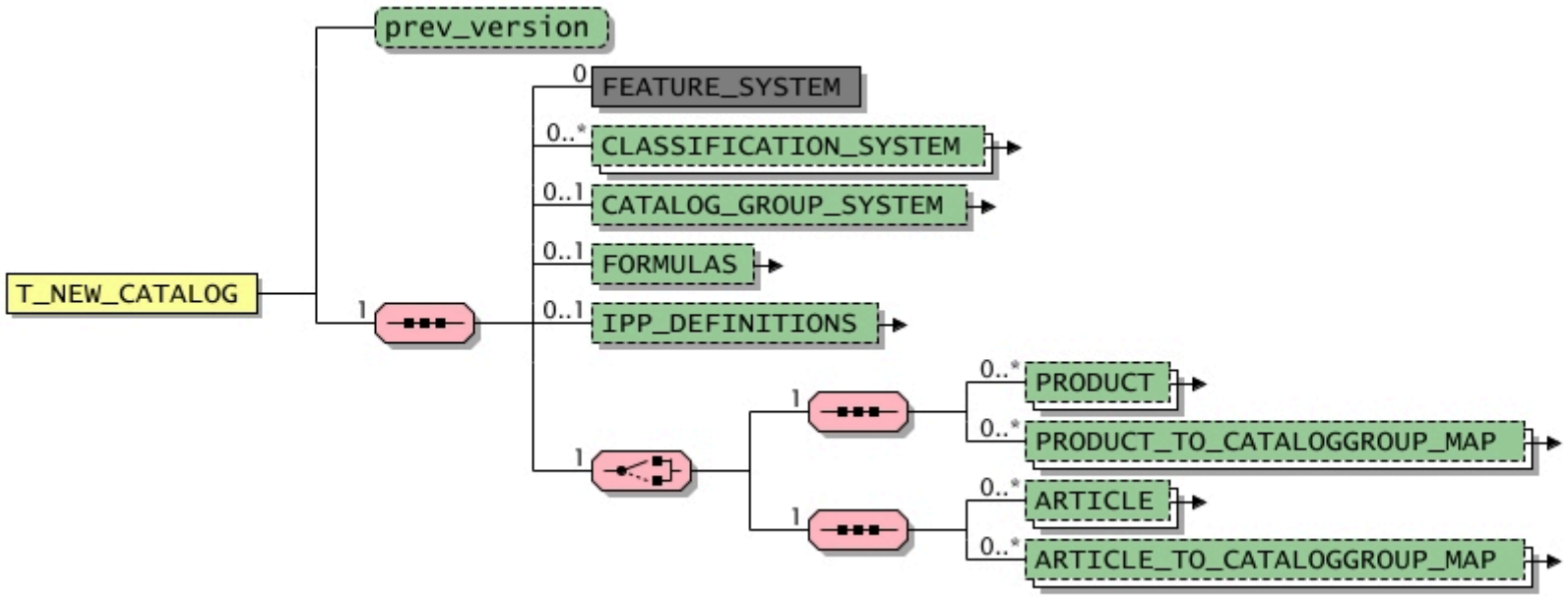

General

Used in	Default value	Data type	Field length	Lang. specific	l.chg. in ver.
BMECAT	-	-	-	-	2005

Attributes

Designation	Attribute name	Mandatory/ optional	Explanation	Default value	Data type	Field length	Lang. specific	l.chg. in ver.
No of previous updates	prev_version	Optional	"prev_version" should not be entered with this transaction; the option of doing so exists here only for reasons of compatibility with 1.01 and "prev_version" must be ignored here; see also "**T_UPDATE_PRODUCTS -->prev_version**" with **T_UPDATE_PRODUCTS** and "**T_UPDATE_PRICES -->prev_version**" with **T_UPDATE_PRICES**. See also Example (Interaction of various transactions)	-	**dtINTEGER**	-	-	1.2_fd

Elements

Designation	Element name	Mandatory/ Optional	Single/ Multiple	Explanation	Default value	Data type	Field length	Lang. specific	l.chg. in ver.
Feature group system	**FEATURE_SYSTEM**	Prohibited	Prohibited	This element was avaiable prior to BMEcat 2005. Because of its limitations in comparison to the **CLASSIFICATION_SYSTEM** element, it has been replaced fully by the revised **CLASSIFICATION_SYSTEM** element.	-	-	-	-	-

Copyright © 2022 BME e.V. - BMEcat® Version 2005.2
Copyright © 2010-2021 BME e.V. - BMEcat® Version 2005.1
Copyright © 2005-2009 BME e.V. - BMEcat® Version 2005
Copyright © 1998–2004 Fraunhofer IAO, Stuttgart; Universität Essen BLI - BMEcat® Version 1.2

Elements

Designation	Element name	Mandatory/ Optional	Single/ Multiple	Explanation	Default value	Data type	Field length	Lang. specific	l.chg. in ver.
Classification system	**CLASSIFICATION_ SYSTEM**	Optional	Multiple	This element defines a classification system.	-	-	-	-	2005
Catalog group system	**CATALOG_GROUP_ SYSTEM**	Optional	Single	With the element **CATALOG_GROUP_SYSTEM** it is possible to built up a hierarchical group structure to which products kann be mapped. This makes finding the products much easier.	-	-	-	-	-
Dictionary of formulas	**FORMULAS**	Optional	Single	List of formulas that are specified in the document header	-	-	-	-	2005fd
IPP applications of the catalog	**IPP_DEFINITIONS**	Optional	Single	IPP applications that are supported by the catalog	-	-	-	-	2005fd
Product	**PRODUCT** in context T_NEW_CATALOG **- mode**	Optional	Multiple	Information about a product	-	-	-	-	2005
Mapping to catalog group	**PRODUCT_TO_ CATALOGGROUP_ MAP** in context T_NEW_CATALOG **- mode**	Optional	Multiple	Mapping of the product to a group of a catalog group system	-	-	-	-	2005fd
Product	**ARTICLE** in context T_NEW_CATALOG **- mode**	Optional	Multiple	Information about a product This element has been replaced by the **PRODUCT** in context T_NEW_CATALOG element. It still may be used in this BMEcat version, though it will become obsolete in the next version.	-	-	-	-	-
Assigning products to catalog groups	**ARTICLE_TO_ CATALOGGROUP_ MAP**in context T_NEW_CATALOG **- mode**	Optional	Multiple	This element is used to assign a product to a group of a catalog group system. This element has been replaced by the new **PRODUCT_TO_CATALOGGROUP_MAP** in context T_NEW_CATALOG element. The element can still be used in the current BMEcat version, but it will be not available in the next version.	-	-	-	-	-

Example

```
<T_NEW_CATALOG>
    <CLASSIFICATION_SYSTEM>
        ...
    </CLASSIFICATION_SYSTEM>
    <FORMULAS>
        ...
```

Copyright © 2022 BME e.V. - BMEcat® Version 2005.2
Copyright © 2010-2021 BME e.V. - BMEcat® Version 2005.1
Copyright © 2005-2009 BME e.V. - BMEcat® Version 2005
Copyright © 1998–2004 Fraunhofer IAO, Stuttgart; Universität Essen BLI - BMEcat® Version 1.2

```
    </FORMULAS>
    <IPP_DEFINITIONS>
        ...
    </IPP_DEFINITIONS>
    <PRODUCT mode="new">
        ...
    </PRODUCT>
    <PRODUCT mode="new">
        ...
    </PRODUCT>
    <PRODUCT mode="new">
        ...
    </PRODUCT>
</T_NEW_CATALOG>
```

Copyright © 2022 BME e.V. - BMEcat® Version 2005.2
Copyright © 2010-2021 BME e.V. - BMEcat® Version 2005.1
Copyright © 2005-2009 BME e.V. - BMEcat® Version 2005
Copyright © 1998–2004 Fraunhofer IAO, Stuttgart; Universität Essen BLI - BMEcat® Version 1.2

CLASSIFICATION_SYSTEM

(Classification system)

This element allows to define a classification classification completely, including groups, synonyms, features and default values (if available).

2005fd: The element was revised and the following sub-elements were added: **CLASSIFICATION_SYSTEM_VERSION_DETAILS**, **CLASSIFICATION_SYSTEM_PARTY_IDREF**, **CLASSIFICATION_SYSTEM_TYPE**
2005: The sub-element **FT_GROUPS** was added.

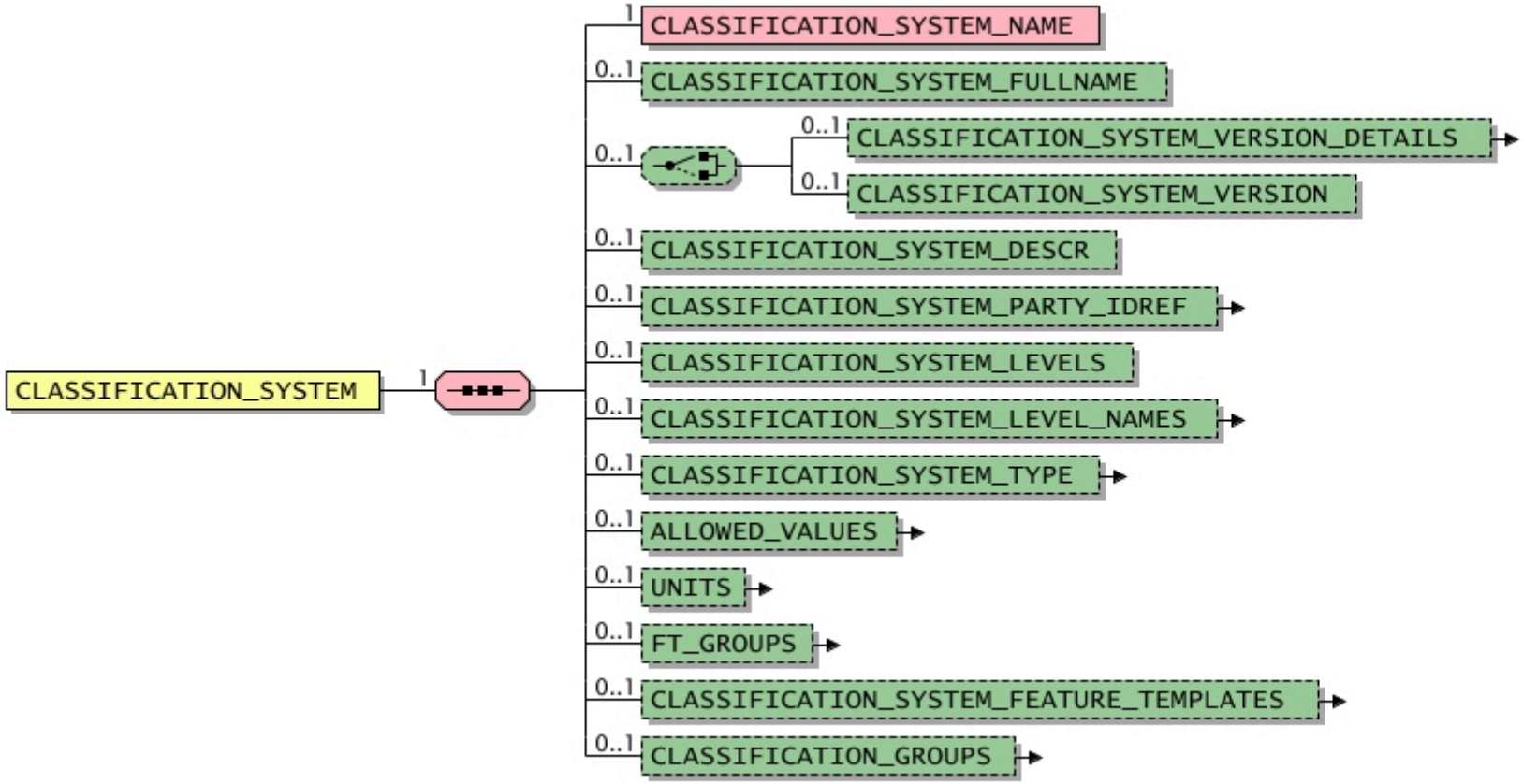

Copyright © 2022 BME e.V. - BMEcat® Version 2005.2
Copyright © 2010-2021 BME e.V. - BMEcat® Version 2005.1
Copyright © 2005-2009 BME e.V. - BMEcat® Version 2005
Copyright © 1998–2004 Fraunhofer IAO, Stuttgart; Universität Essen BLI - BMEcat® Version 1.2

General

Used in	Default value	Data type	Field length	Lang. specific	l.chg. in ver.
T_NEW_CATALOG	-	-	-	-	2005

Elements

Designation	Element name	Mandatory/ Optional	Single/ Multiple	Explanation	Default value	Data type	Field length	Lang. specific	l.chg. in ver.
Classification system name	**CLASSIFICATION_ SYSTEM_NAME**	Mandatory	Single	Unique designation of the classification system, this identification must combine the (short) name of the classification system with the version number so that unique referencing of the classification system is possible. The format for the identification number should follow the pattern "<Name>-<MajorVersion>.<MinorVersion>". 2005fd: The maximum length has been extended from 20 characters to 80 characters. See also: **Predefined values for element CLASSIFICATION_SYSTEM_NAME** **Examples** ECLASS-4.1, UNSPSC-6.0801 `<CLASSIFICATION_SYSTEM_NAME>ECLASS-4.1 </CLASSIFICATION_SYSTEM_NAME>`	-	**dtSTRING**	80	-	2005fd
Complete name of the classification system	**CLASSIFICATION_ SYSTEM_FULLNAME**	Optional	Single	Full name of the classification system 2005fd: The maximum length has been extended from 60 characters to 80 characters. **Example (eCl@ss)** `<CLASSIFICATION_SYSTEM_FULLNAME>eCl@ss 5.0 - Standard for Material Classification and Product Groups </CLASSIFICATION_SYSTEM_FULLNAME>`	-	**dtMLSTRING**	80	Yes	2005fd
Version of the classification system	**CLASSIFICATION_ SYSTEM_VERSION_ DETAILS**	Optional	Single	Detailled information on the version of the classification system 	-	-	-	-	2005fd
Version of the classification system	**CLASSIFICATION_ SYSTEM_VERSION**	Optional	Single	This element contains the version of the classification system. **Example (eCl@ss)** `<CLASSIFICATION_SYSTEM_VERSION>5.1 </CLASSIFICATION_SYSTEM_VERSION>`	-	**dtSTRING**	20	-	-

Copyright © 2022 BME e.V. - BMEcat® Version 2005.2
Copyright © 2010-2021 BME e.V. - BMEcat® Version 2005.1
Copyright © 2005-2009 BME e.V. - BMEcat® Version 2005
Copyright © 1998–2004 Fraunhofer IAO, Stuttgart; Universität Essen BLI - BMEcat® Version 1.2

Elements

Designation	Element name	Mandatory/ Optional	Single/ Multiple	Explanation	Default value	Data type	Field length	Lang. specific	l.chg. in ver.
Classification system description	**CLASSIFICATION_ SYSTEM_DESCR**	Optional	Single	Description of the classification system and its content (*) 2005fd: The maximum length has been extended from 250 characters to 16,000 characters.	-	**dtMLSTRING**	16000	Yes	2005fd
Reference to classification system party	**CLASSIFICATION_ SYSTEM_PARTY_IDREF - type**	Optional	Single	Reference to the ID of the organization that creates, maintains and/or provides the classification system. The element has to point to a **PARTY_ID** within the document. (*)	-	**dtSTRING**	250	-	2005fd

Number of hierarchical levels	**CLASSIFICATION_ SYSTEM_LEVELS**	Optional	Single	Number of hierarchy levels in the classification system
				Example (eCl@ss)
				`<CLASSIFICATION_SYSTEM_LEVELS>4</CLASSIFICATION_SYSTEM_LEVELS>`
				Example (ETIM)
				`<CLASSIFICATION_SYSTEM_LEVELS>2</CLASSIFICATION_SYSTEM_LEVELS>`
					-	**dtINTEGER**	-	-	-

Designation of the hierarchical levels	**CLASSIFICATION_ SYSTEM_LEVEL_ NAMES**	Optional	Single	Specifies the names of the hierarchical levels	-	-	-	-	-
Classification system type	**CLASSIFICATION_ SYSTEM_TYPE**	Optional	Single	Information about the structure of the classification system (*)	-	-	-	-	2005fd
Allowed values	**ALLOWED_VALUES**	Optional	Single	List of allowed values	-	-	-	-	-
Units of measurement	**UNITS**	Optional	Single	Specifies the units of measurement used within the classification system and its features	-	-	-	-	-
Feature groups	**FT_GROUPS**	Optional	Single	Specifies the feature groups within a classification system; these groups are build upon single feature and categorize them. (*)	-	-	-	-	2005fd
Features of the classification system	**CLASSIFICATION_ SYSTEM_FEATURE_ TEMPLATES**	Optional	Single	Specifies the features used within the classification system	-	-	-	-	-
Classification groups	**CLASSIFICATION_ GROUPS**	Optional	Single	Contains all groups of the classification system	-	-	-	-	-

Copyright © 2022 BME e.V. - BMEcat® Version 2005.2
Copyright © 2010-2021 BME e.V. - BMEcat® Version 2005.1
Copyright © 2005-2009 BME e.V. - BMEcat® Version 2005
Copyright © 1998–2004 Fraunhofer IAO, Stuttgart; Universität Essen BLI - BMEcat® Version 1.2

Predefined values for element CLASSIFICATION_SYSTEM_NAME			
Designation	Element value	Explanation	l.chg. in ver.
CPV	CPV-yyyy-mm-dd	Reference to the classification system CPV (Common Procurement Vocabulary) with version date (e.g., CPV-2003-12-16); see siehe **http://simap.eu.int**	2005fd
eCl@ss	ECLASS-x.y	Reference to the classification system eCl@ss with major version x and minor version y (e.g., ECLASS-5.1); see **http://www.eclass-online.com**	-
eOTD	EOTD-yyyy-mm-dd	Reference to the classification system eOTD (ECCMA Open Technical Dictionary) with version date (e.g., EOTD-2004-08-01); see **http://www.eccma.org**	2005fd
ETIM	ETIM-x.y	Reference to the classification system ETIM with major version x and minor version y (e.g., ETIM-2.0); see **http://www.etim.de**	-
GPC	GPC-x.y	Reference to the classification system EAN.UCC GPC (Global Product Classification) with major version x and minor version y (e.g., GPC-4.0); see **http://www.gs1.org**	2005fd
profiCl@ss	PROFICLASS-x.y	Reference to the classification system profiCl@ss with major version x and minor version y (e.g., PROFICLASS-2.1); see **http://www.proficlass.de**	2005fd
RNTD	RNTD-x.y	Reference to the classification system RNTD (RosettaNet Technical Dictionary) with major version x and minor version y (e.g., RNTD-4.0); see **http://www.rosettanet.org**	2005fd
RUS	RUS-x.y	Reference to the classification system RUS (Requisite Unifying Structure) with major version x and minor version y (e.g., RUS-4.0); see **http://rusportal.requisite.com**	2005fd
UNSPSC	UNSPSC-x.yyyy	Reference to the classification system UNSPSC with major version x and minor version y (e.g., UNSPSC-6.0801); see **http://www.unspsc.org**	-
Proprietary classification system	udf_NAME-x.y	Reference to a proprietary (non-standard) classification system. The value has to start with 'udf_' followed by the classification system name in capital letters, hyphen, and version (major version x and minor version y). For example: udf_MYSYSTEM-3.0. The length of the name is limited to 72 characters; the version to 7 characters.	-
Other classification system	User defined value, format: [\w\-\.]{1,80}	Other standard classification system, which is not pre-defined in BMEcat, can be described in a similar way: The name of the system in capital, followed by a hyphen and the version information. For instance, NAME-3.4. The length of the name is limited to 72 characters. The version information, where major and minor version are separated by a dot, is limited to 7 characters.	2005fd

Example

```
<CLASSIFICATION_SYSTEM>
    <CLASSIFICATION_SYSTEM_NAME>ECLASS-5.0</CLASSIFICATION_SYSTEM_NAME>
    <CLASSIFICATION_SYSTEM_FULLNAME>eCl@ss 5.0 - Standard for Material Classification and Product Groups</CLASSIFICATION_SYSTEM_FULLNAME>
    <CLASSIFICATION_SYSTEM_VERSION_DETAILS>
        <VERSION>5.0</VERSION>
        <VERSION_DATE>2003-10-14</VERSION_DATE>
    </CLASSIFICATION_SYSTEM_VERSION_DETAILS>
    <CLASSIFICATION_SYSTEM_DESCR>eCl@ss is characterized by a four-level hierarchical classification key with a keyword index including 12,000 items. eCl@ss
images the procurement markets for buyers and supports engineers in development, planning and maintenance. Through the access via either the hierarchy or keywords
both experts and occasional users can navigate the classification. The unique feature of eCl@ss is the integration of sets of attributes for describing materials
and services.</CLASSIFICATION_SYSTEM_DESCR>
    <CLASSIFICATION_SYSTEM_LEVELS>4</CLASSIFICATION_SYSTEM_LEVELS>
    <CLASSIFICATION_SYSTEM_LEVEL_NAMES>
        <CLASSIFICATION_SYSTEM_LEVEL_NAME level="1">Segment</CLASSIFICATION_SYSTEM_LEVEL_NAME>
        <CLASSIFICATION_SYSTEM_LEVEL_NAME level="2">Family</CLASSIFICATION_SYSTEM_LEVEL_NAME>
        <CLASSIFICATION_SYSTEM_LEVEL_NAME level="3">Class</CLASSIFICATION_SYSTEM_LEVEL_NAME>
        <CLASSIFICATION_SYSTEM_LEVEL_NAME level="4">Commodity</CLASSIFICATION_SYSTEM_LEVEL_NAME>
```

Copyright © 2022 BME e.V. - BMEcat® Version 2005.2
Copyright © 2010-2021 BME e.V. - BMEcat® Version 2005.1
Copyright © 2005-2009 BME e.V. - BMEcat® Version 2005
Copyright © 1998–2004 Fraunhofer IAO, Stuttgart; Universität Essen BLI - BMEcat® Version 1.2

```
    </CLASSIFICATION_SYSTEM_LEVEL_NAMES>
    <CLASSIFICATION_SYSTEM_TYPE>
        <GROUPID_HIERARCHY>false</GROUPID_HIERARCHY>
        <MAPPING_TYPE>single</MAPPING_TYPE>
        <MAPPING_LEVEL>leaf</MAPPING_LEVEL>
        <BALANCED_TREE>yes</BALANCED_TREE>
        <INHERITANCE>no</INHERITANCE>
    </CLASSIFICATION_SYSTEM_TYPE>
     ...
</CLASSIFICATION_SYSTEM>
```

Copyright © 2022 BME e.V. - BMEcat® Version 2005.2
Copyright © 2010-2021 BME e.V. - BMEcat® Version 2005.1
Copyright © 2005-2009 BME e.V. - BMEcat® Version 2005
Copyright © 1998–2004 Fraunhofer IAO, Stuttgart; Universität Essen BLI - BMEcat® Version 1.2

CLASSIFICATION_SYSTEM_VERSION_DETAILS

(Version of the classification system)

This element contains detailled information on the version of the classification system and its version history.

2005fd: This element replaces with a modified semantics the former **CLASSIFICATION_SYSTEM_VERSION** element; it contains the following new sub-elements: **VERSION**, **VERSION_DATE**, **REVISION**, **REVISION_DATE**, **ORIGINAL_DATE**

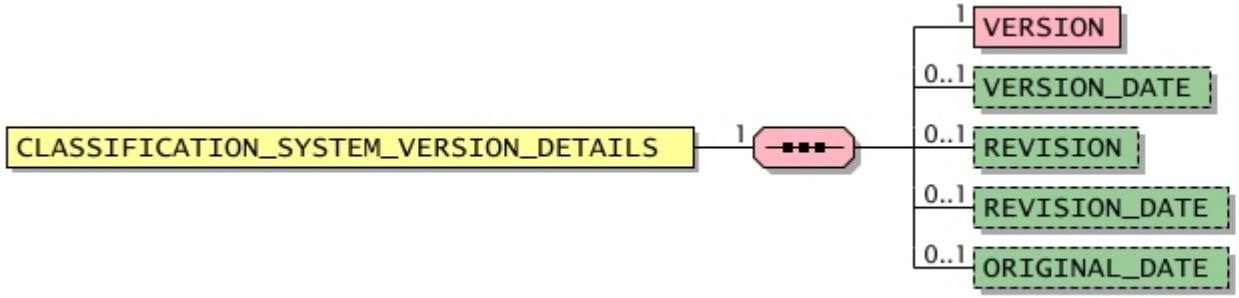

General					
Used in	Default value	Data type	Field length	Lang. specific	l.chg. in ver.
CLASSIFICATION_SYSTEM	-	-	-	-	2005fd

Elements									
Designation	Element name	Mandatory/ Optional	Single/ Multiple	Explanation	Default value	Data type	Field length	Lang. specific	l.chg. in ver.
Version	**VERSION**	Mandatory	Single	Detailled information on the version 2005fd: New element	-	**dtSTRING**	20	-	2005fd
Version date	**VERSION_DATE**	Optional	Single	Date of the given version 2005fd: New element	-	**dtDATETIME**	-	-	2005fd
Revision	**REVISION**	Optional	Single	Revision number of the given version	-	**dtSTRING**	20	-	2005fd

Copyright © 2022 BME e.V. - BMEcat® Version 2005.2
Copyright © 2010-2021 BME e.V. - BMEcat® Version 2005.1
Copyright © 2005-2009 BME e.V. - BMEcat® Version 2005
Copyright © 1998–2004 Fraunhofer IAO, Stuttgart; Universität Essen BLI - BMEcat® Version 1.2

Elements

Designation	Element name	Mandatory/ Optional	Single/ Multiple	Explanation	Default value	Data type	Field length	Lang. specific	l.chg. in ver.
				2005fd: New element					
Revision date	**REVISION_DATE**	Optional	Single	Date of the latest revision 2005fd: New element	-	**dtDATETIME**	-	-	2005fd
Original date	**ORIGINAL_DATE**	Optional	Single	Date of the first version in its first revision 2005fd: New element	-	**dtDATETIME**	-	-	2005fd

Example (eCl@ss)

```
<CLASSIFICATION_SYSTEM_VERSION_DETAILS>
    <VERSION>5.0</VERSION>
    <VERSION_DATE>2003-12-14</VERSION_DATE>
</CLASSIFICATION_SYSTEM_VERSION_DETAILS>
```

Copyright © 2022 BME e.V. - BMEcat® Version 2005.2
Copyright © 2010-2021 BME e.V. - BMEcat® Version 2005.1
Copyright © 2005-2009 BME e.V. - BMEcat® Version 2005
Copyright © 1998–2004 Fraunhofer IAO, Stuttgart; Universität Essen BLI - BMEcat® Version 1.2

CLASSIFICATION_SYSTEM_PARTY_IDREF

(Reference to classification system party)

This element contains a reference to the ID of the organization that creates, maintains and/or provides the classification system. The element has to point to a **PARTY_ID** within the document.

2005fd: New element

General						
Used in			Default value	Data type	Field length	Lang. specific	l.chg. in ver.
CLASSIFICATION_SYSTEM			-	**dtSTRING**	250	-	2005fd

Attributes								
Designation	Attribute name	Mandatory/ optional	Explanation	Default value	Data type	Field length	Lang. specific	l.chg. in ver.
Coding standard	type	Optional	This attribute is used to state the coding standard to which the identifier (**PARTY_ID**) adheres. The most common coding standards are predefined. See also: **Predefined values for attribute "type"**	-	**dtSTRING**	250	-	1.2_fd

Predefined values for attribute "type"			
Designation	Attribute value	Explanation	l.chg. in ver.
Buyer-specific number	buyer_specific	Identification number defined by the buyer	-
Customer specific number	customer_specific	Identification number defined by the customer	2005fd
Dun & Bradstreet	duns	DUNS-Number (see also **http://dbuk.dnb.com/english/DataBase/duns.htm**)	-
Global location number	iln	Internationally called GLN (see GLN below)	-
Global location number	gln	Global Location Number GLN (see also **http://www.ean-int.org/locations.html**)	2005fd
Party-specific number	party_specific	Identification number defined by the respective party	2005fd
Supplier-specific number	supplier_specific	Identification number defined by the supplier	-

Copyright © 2022 BME e.V. - BMEcat® Version 2005.2
Copyright © 2010-2021 BME e.V. - BMEcat® Version 2005.1
Copyright © 2005-2009 BME e.V. - BMEcat® Version 2005
Copyright © 1998–2004 Fraunhofer IAO, Stuttgart; Universität Essen BLI - BMEcat® Version 1.2

Predefined values for attribute "type"			
Designation	Attribute value	Explanation	l.chg. in ver.
Other codification standard	User defined value, format: \w{1,250}	Identificator of codification standard. "\w{1,250}" means that the identificator of the codification standard has to be at least 1 chraracter long up to a maximum of 250 characters.	-

Copyright © 2022 BME e.V. - BMEcat® Version 2005.2
Copyright © 2010-2021 BME e.V. - BMEcat® Version 2005.1
Copyright © 2005-2009 BME e.V. - BMEcat® Version 2005
Copyright © 1998–2004 Fraunhofer IAO, Stuttgart; Universität Essen BLI - BMEcat® Version 1.2

CLASSIFICATION_SYSTEM_LEVEL_NAMES

(Designation of the hierarchical levels)

This element specifies the names of the hierarchy levels.

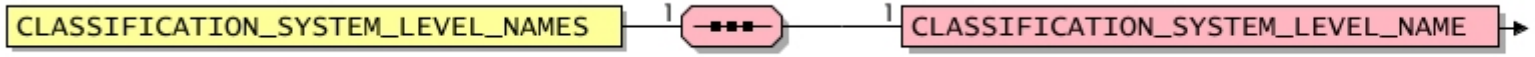

General					
Used in	Default value	Data type	Field length	Lang. specific	l.chg. in ver.
CLASSIFICATION_SYSTEM	-	-	-	-	-

Elements									
Designation	Element name	Mandatory/ Optional	Single/ Multiple	Explanation	Default value	Data type	Field length	Lang. specific	l.chg. in ver.
Name of the hierarchy level	**CLASSIFICATION_ SYSTEM_LEVEL_NAME - level**	Mandatory	Single	Name for the hierarchy level *	-	**dtMLSTRING**	80	Yes	2005

Copyright © 2022 BME e.V. - BMEcat® Version 2005.2
Copyright © 2010-2021 BME e.V. - BMEcat® Version 2005.1
Copyright © 2005-2009 BME e.V. - BMEcat® Version 2005
Copyright © 1998–2004 Fraunhofer IAO, Stuttgart; Universität Essen BLI - BMEcat® Version 1.2

CLASSIFICATION_SYSTEM_LEVEL_NAME

(Name of the hierarchy level)

This element contains the name of the hierarchy level of a classification system.

2005: The maximum length has been extended from 60 characters to 80 characters.

General					
Used in	Default value	Data type	Field length	Lang. specific	l.chg. in ver.
CLASSIFICATION_SYSTEM_LEVEL_NAMES	-	**dtMLSTRING**	80	Yes	2005

Attributes								
Designation	Attribute name	Mandatory/ optional	Explanation	Default value	Data type	Field length	Lang. specific	l.chg. in ver.
Number of the hierarchy level	level	Mandatory	The hierarchy levels are sorted according to their order by this attribute. The highest level starts with level number 1.	-	**dtINTEGER**	-	-	-

Example (eCl@ss)

The classification system eCl@ss definies four hierarchy levels: Segment, Family, Class, and Commodity.

```
<CLASSIFICATION_SYSTEM_LEVEL_NAMES>
    <CLASSIFICATION_SYSTEM_LEVEL_NAME level="1">Segment</CLASSIFICATION_SYSTEM_LEVEL_NAME>
    <CLASSIFICATION_SYSTEM_LEVEL_NAME level="2">Family</CLASSIFICATION_SYSTEM_LEVEL_NAME>
    <CLASSIFICATION_SYSTEM_LEVEL_NAME level="3">Class</CLASSIFICATION_SYSTEM_LEVEL_NAME>
    <CLASSIFICATION_SYSTEM_LEVEL_NAME level="4">Commodity</CLASSIFICATION_SYSTEM_LEVEL_NAME>
</CLASSIFICATION_SYSTEM_LEVEL_NAMES>
```

Copyright © 2022 BME e.V. - BMEcat® Version 2005.2
Copyright © 2010-2021 BME e.V. - BMEcat® Version 2005.1
Copyright © 2005-2009 BME e.V. - BMEcat® Version 2005
Copyright © 1998–2004 Fraunhofer IAO, Stuttgart; Universität Essen BLI - BMEcat® Version 1.2

CLASSIFICATION_SYSTEM_TYPE

(Classification system type)

This element contains information about the structure of the classification system, especially about the class hierarchy.

2005fd: New element

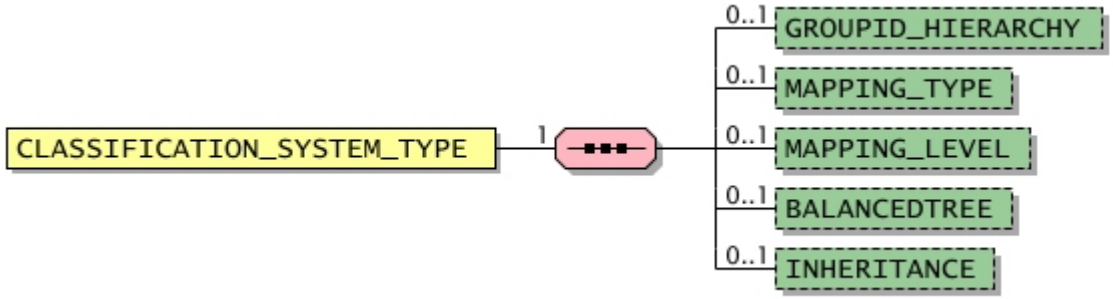

General					
Used in	Default value	Data type	Field length	Lang. specific	l.chg. in ver.
CLASSIFICATION_SYSTEM	-	-	-	-	2005fd

Elements									
Designation	Element name	Mandatory/ Optional	Single/ Multiple	Explanation	Default value	Data type	Field length	Lang. specific	l.chg. in ver.
Group identifier type	**GROUPID_HIERARCHY**	Optional	Single	This element specifies the type of the group identifiers contained in **CLASSIFICATION_GROUP_ID** elements: The value 'true' indicates that the group ID describes the position of the group in the hierarchy, since it is a code built from the navigation path to the respective group. If the value is 'false', then the group ID can not be interpreted this way. If the element is missing, no statement about the group ID type is made. When transferring the eCl@ss classification system, this element must be set to 'false', because the first group ID given in the **CLASSIFICATION_GROUP_ID** element contains the eCl@ss field 'idcl' and the additional group ID given in the **CLASSIFICATION_GROUP_ID2** element contains the eCl@ss field 'coded name' (e.g., 21011304).	-	**dtBOOLEAN**	-	-	2005fd

Copyright © 2022 BME e.V. - BMEcat® Version 2005.2
Copyright © 2010-2021 BME e.V. - BMEcat® Version 2005.1
Copyright © 2005-2009 BME e.V. - BMEcat® Version 2005
Copyright © 1998–2004 Fraunhofer IAO, Stuttgart; Universität Essen BLI - BMEcat® Version 1.2

Elements

Designation	Element name	Mandatory/ Optional	Single/ Multiple	Explanation	Default value	Data type	Field length	Lang. specific	l.chg. in ver.
				 2005fd: New element **Example** In the eCl@ss classification system, the group ID 24040105 is actually a code and has to be interpreted as follows: the group belongs to the group number 24 on the top level, to the group 04 on the second level, to the group 01 on the third level, and it is itself the group number 05 on the lowest level.					
Product mapping type	**MAPPING_TYPE**	Optional	Single	Indicates how products have to be mapped to groups; to one or many groups of the hierarchy. If products may be mapped to multiple group, the respective system is no longer a classification system; this may cause problems how the interprete the product features. 2005fd: New element See also: **Permitted values for element MAPPING_TYPE**	-	**dtSTRING**	20	-	2005fd
Product mapping level	**MAPPING_LEVEL**	Optional	Single	Indicates how products have to be mapped to groups; to leafs or nodes of the hierarchy. 2005fd: New element See also: **Permitted values for element MAPPING_LEVEL**	-	**dtSTRING**	20	-	2005fd
Balanced tree	**BALANCEDTREE**	Optional	Single	Indicates whether the classification tree is balanced (i.e. all sub-trees on the first level have the same number of subordinate levels). 2005fd: New element	-	**dtBOOLEAN**	-	-	2005fd
Feature inheritance	**INHERITANCE**	Optional	Single	Indicates whether feature definitions on higher levels are inheritated to groups on lower levels. In this case, the features with all their characteristics will be inherited; the characteristics may be further specified respectively limited on the lower level. The actual usage of feature inheritance is subject of the respective classification system which determines how to interpret this concept. 2005fd: New element	-	**dtBOOLEAN**	-	-	2005fd

Copyright © 2022 BME e.V. - BMEcat® Version 2005.2
Copyright © 2010-2021 BME e.V. - BMEcat® Version 2005.1
Copyright © 2005-2009 BME e.V. - BMEcat® Version 2005
Copyright © 1998–2004 Fraunhofer IAO, Stuttgart; Universität Essen BLI - BMEcat® Version 1.2

Permitted values for element MAPPING_TYPE			
Designation	Element value	Explanation	l.chg. in ver.
Multiple mapping	multiple	Indicates that each product can be mapped to one or many groups.	2005fd
Single mapping	single	Indicates that each product has to be mapped to one group only.	2005fd

Permitted values for element MAPPING_LEVEL			
Designation	Element value	Explanation	l.chg. in ver.
Leaf mapping	leaf	Indicates that products have to be mapped to groups on the leaf level only.	2005fd
Leaf or node mapping	leaf_or_node	Indicates that products can be mapped to groups on the leaf or node level.	2005fd

Copyright © 2022 BME e.V. - BMEcat® Version 2005.2
Copyright © 2010-2021 BME e.V. - BMEcat® Version 2005.1
Copyright © 2005-2009 BME e.V. - BMEcat® Version 2005
Copyright © 1998–2004 Fraunhofer IAO, Stuttgart; Universität Essen BLI - BMEcat® Version 1.2

ALLOWED_VALUES

(Allowed values)

Provides a list of allowed values; each values is defined by a **ALLOWED_VALUE** element.

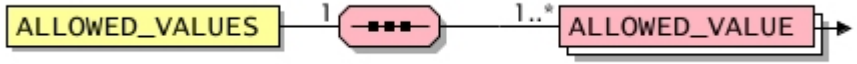

General					
Used in	Default value	Data type	Field length	Lang. specific	l.chg. in ver.
CLASSIFICATION_SYSTEM	-	-	-	-	-

Elements									
Designation	Element name	Mandatory/ Optional	Single/ Multiple	Explanation	Default value	Data type	Field length	Lang. specific	l.chg. in ver.
Allowed value definition	**ALLOWED_VALUE**	Mandatory	Multiple	Definition of an allowed value	-	-	-	-	2005fd

Example

```
<ALLOWED_VALUES>
    <ALLOWED_VALUE>
        <ALLOWED_VALUE_ID>AAA074001</ALLOWED_VALUE_ID>
        <ALLOWED_VALUE_NAME>DN 450 (18)</ALLOWED_VALUE_NAME>
    </ALLOWED_VALUE>
    <ALLOWED_VALUE>
        <ALLOWED_VALUE_ID>AAA075001</ALLOWED_VALUE_ID>
        <ALLOWED_VALUE_NAME>DN 500 (20)</ALLOWED_VALUE_NAME>
    </ALLOWED_VALUE>
     ...
</ALLOWED_VALUES>
```

Copyright © 2022 BME e.V. - BMEcat® Version 2005.2
Copyright © 2010-2021 BME e.V. - BMEcat® Version 2005.1
Copyright © 2005-2009 BME e.V. - BMEcat® Version 2005
Copyright © 1998–2004 Fraunhofer IAO, Stuttgart; Universität Essen BLI - BMEcat® Version 1.2

ALLOWED_VALUE

(Allowed value definition)

This element defines an allowed value.

2005fd: This element has been extended by the following sub-elements: **ALLOWED_VALUE_VERSION**, **ALLOWED_VALUE_SHORTNAME**, **ALLOWED_VALUE_SYNONYMS**, **ALLOWED_VALUE_SOURCE**.

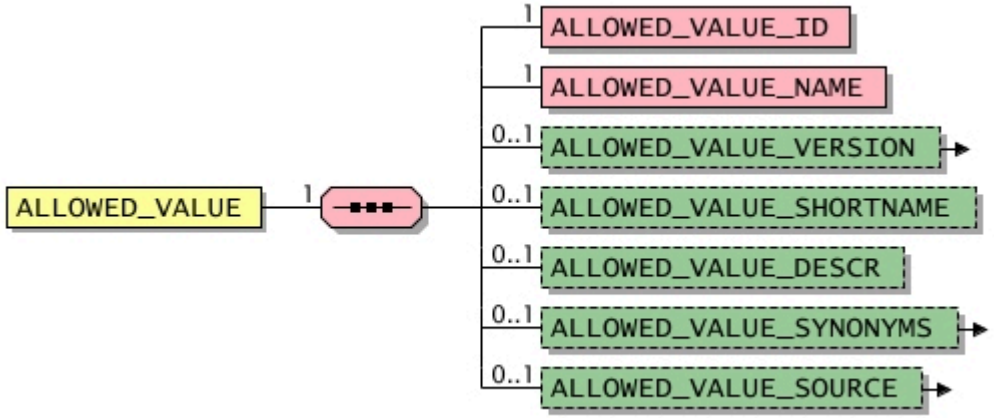

General					
Used in	Default value	Data type	Field length	Lang. specific	l.chg. in ver.
ALLOWED_VALUES	-	-	-	-	2005fd

Elements									
Designation	Element name	Mandatory/ Optional	Single/ Multiple	Explanation	Default value	Data type	Field length	Lang. specific	l.chg. in ver.
Allowed value ID	**ALLOWED_VALUE_ID**	Mandatory	Single	Unique identifier of the allowed value	-	**dtSTRING**	60	-	-
Name of the allowed value	**ALLOWED_VALUE_ NAME**	Mandatory	Single	This element contains the allowed value itself. The value can be language-specific, whereas the ID is independent from the language. 2005fd: The maximum length has been extended from 60 characters to 80 characters.	-	**dtMLSTRING**	80	Yes	2005fd

Copyright © 2022 BME e.V. - BMEcat® Version 2005.2
Copyright © 2010-2021 BME e.V. - BMEcat® Version 2005.1
Copyright © 2005-2009 BME e.V. - BMEcat® Version 2005
Copyright © 1998–2004 Fraunhofer IAO, Stuttgart; Universität Essen BLI - BMEcat® Version 1.2

Elements

Designation	Element name	Mandatory/ Optional	Single/ Multiple	Explanation	Default value	Data type	Field length	Lang. specific	l.chg. in ver.
				Example `<ALLOWED_VALUE_NAME>crème white</ALLOWED_VALUE_NAME>`					
Version of the allowed value	**ALLOWED_VALUE_ VERSION**	Optional	Single	Detailled information on the version of the value 	-	-	-	-	2005fd
Short name of the allowed value	**ALLOWED_VALUE_ SHORTNAME**	Optional	Single	Short name of the allowed value in addition to its name, e.g. "Bin" for "Built-in" 2005fd: New element	-	**dtMLSTRING**	80	Yes	2005fd
Description of the allowed value	**ALLOWED_VALUE_ DESCR**	Optional	Single	This element can be used to describe the allowed value in more detail. **Example** `<ALLOWED_VALUE_DESCR>crème white corresponds to RAL 9010 </ALLOWED_VALUE_DESCR>`	-	**dtMLSTRING**	250	Yes	-
Allowed value synonyms	**ALLOWED_VALUE_ SYNONYMS**	Optional	Single	List of synonyms of the allowed value 	-	-	-	-	2005fd
Allowed value source	**ALLOWED_VALUE_ SOURCE**	Optional	Single	Reference to a document, standard or definition describing the allowed value. 	-	-	-	-	2005

Copyright © 2022 BME e.V. - BMEcat® Version 2005.2
Copyright © 2010-2021 BME e.V. - BMEcat® Version 2005.1
Copyright © 2005-2009 BME e.V. - BMEcat® Version 2005
Copyright © 1998–2004 Fraunhofer IAO, Stuttgart; Universität Essen BLI - BMEcat® Version 1.2

ALLOWED_VALUE_VERSION

(Version of the allowed value)

This element contains detailled information on the version of the allowed value and its version history.

2005fd: New element

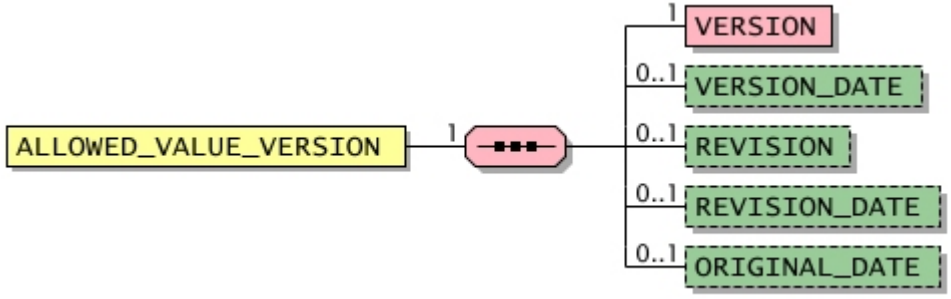

General					
Used in	Default value	Data type	Field length	Lang. specific	I.chg. in ver.
ALLOWED_VALUE	-	-	-	-	2005fd

Elements									
Designation	Element name	Mandatory/ Optional	Single/ Multiple	Explanation	Default value	Data type	Field length	Lang. specific	I.chg. in ver.
Version	**VERSION**	Mandatory	Single	Detailled information on the version 2005fd: New element	-	**dtSTRING**	20	-	2005fd
Version date	**VERSION_DATE**	Optional	Single	Date of the given version 2005fd: New element	-	**dtDATETIME**	-	-	2005fd
Revision	**REVISION**	Optional	Single	Revision number of the given version 2005fd: New element	-	**dtSTRING**	20	-	2005fd

Copyright © 2022 BME e.V. - BMEcat® Version 2005.2
Copyright © 2010-2021 BME e.V. - BMEcat® Version 2005.1
Copyright © 2005-2009 BME e.V. - BMEcat® Version 2005
Copyright © 1998–2004 Fraunhofer IAO, Stuttgart; Universität Essen BLI - BMEcat® Version 1.2

Elements									
Designation	Element name	Mandatory/ Optional	Single/ Multiple	Explanation	Default value	Data type	Field length	Lang. specific	l.chg. in ver.
Revision date	**REVISION_DATE**	Optional	Single	Date of the latest revision 2005fd: New element	-	**dtDATETIME**	-	-	2005fd
Original date	**ORIGINAL_DATE**	Optional	Single	Date of the first version in its first revision 2005fd: New element	-	**dtDATETIME**	-	-	2005fd

Copyright © 2022 BME e.V. - BMEcat® Version 2005.2
Copyright © 2010-2021 BME e.V. - BMEcat® Version 2005.1
Copyright © 2005-2009 BME e.V. - BMEcat® Version 2005
Copyright © 1998–2004 Fraunhofer IAO, Stuttgart; Universität Essen BLI - BMEcat® Version 1.2

ALLOWED_VALUE_SYNONYMS

(Allowed value synonyms)

This element contains a list of synonyms of the allowed value.

2005fd: New element

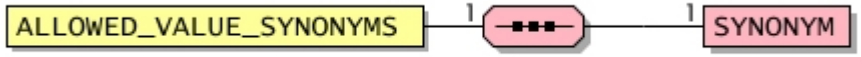

General					
Used in	Default value	Data type	Field length	Lang. specific	l.chg. in ver.
ALLOWED_VALUE	-	-	-	-	2005fd

Elements									
Designation	Element name	Mandatory/ Optional	Single/ Multiple	Explanation	Default value	Data type	Field length	Lang. specific	l.chg. in ver.
Synonym	**SYNONYM**	Mandatory	Single	The synonym support name-based product search. 2005fd: The maximum length has been extended from 60 characters to 80 characters.	-	**dtMLSTRING**	80	Yes	2005fd

Copyright © 2022 BME e.V. - BMEcat® Version 2005.2
Copyright © 2010-2021 BME e.V. - BMEcat® Version 2005.1
Copyright © 2005-2009 BME e.V. - BMEcat® Version 2005
Copyright © 1998–2004 Fraunhofer IAO, Stuttgart; Universität Essen BLI - BMEcat® Version 1.2

ALLOWED_VALUE_SOURCE

(Allowed value source)

This element contains a reference to a document, standard or definition describing the allowed value.

2005fd: New element
2005: The sub-element **SOURCE_DESCR** was renamed to **SOURCE_NAME**.

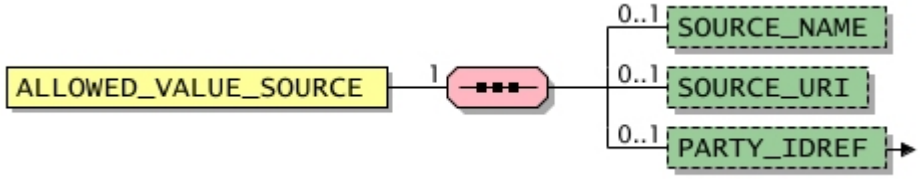

General					
Used in	Default value	Data type	Field length	Lang. specific	I.chg. in ver.
ALLOWED_VALUE	-	-	-	-	2005

Elements

Designation	Element name	Mandatory/ Optional	Single/ Multiple	Explanation	Default value	Data type	Field length	Lang. specific	I.chg. in ver.
Source description	**SOURCE_NAME**	Optional	Single	Description of the source, e.g., the name of the document or standard 2005fd: New element 2005: This element was named **SOURCE_DESCR** in Version 2005 final draft, now it is named **SOURCE_NAME**. The maximum length has been reduced from 250 characters to 80 characters.	-	**dtMLSTRING**	80	Yes	2005
URI of the source	**SOURCE_URI**	Optional	Single	URI of the source, e.g., pointing to the document or standard 2005fd: New element	-	**dtSTRING**	255	-	2005fd
Reference to a business partner	**PARTY_IDREF - type**	Optional	Single	Reference to a business partner. It contains the unique identifier (**PARTY_ID**) of the respective party (element **PARTY**).	-	**dtSTRING**	250	-	2005fd

Copyright © 2022 BME e.V. - BMEcat® Version 2005.2
Copyright © 2010-2021 BME e.V. - BMEcat® Version 2005.1
Copyright © 2005-2009 BME e.V. - BMEcat® Version 2005
Copyright © 1998–2004 Fraunhofer IAO, Stuttgart; Universität Essen BLI - BMEcat® Version 1.2

Copyright © 2022 BME e.V. - BMEcat® Version 2005.2
Copyright © 2010-2021 BME e.V. - BMEcat® Version 2005.1
Copyright © 2005-2009 BME e.V. - BMEcat® Version 2005
Copyright © 1998–2004 Fraunhofer IAO, Stuttgart; Universität Essen BLI - BMEcat® Version 1.2

PARTY_IDREF

(Reference to a business partner)

This element provides a reference to a business partner. It contains the unique identifier (**PARTY_ID**) of the respective party (element **PARTY**).

2005fd: New element

General						
Used in	Default value	Data type	Field length	Lang. specific	l.chg. in ver.	
ALLOWED_VALUE_SOURCE, **ARTICLE_CONTACTS**, **CLASSIFICATION_GROUP_CONTACTS**, **CLASSIFICATION_GROUP_SOURCE**, **FORMULA_SOURCE**, **FT_SOURCE**, **PRODUCT_CONTACTS**	-	**dtSTRING**	250	-	2005fd	

Attributes								
Designation	Attribute name	Mandatory/ optional	Explanation	Default value	Data type	Field length	Lang. specific	l.chg. in ver.
Coding standard	type	Optional	This attribute is used to state the coding standard to which the identifier (**PARTY_ID**) adheres. The most common coding standards are predefined. See also: **Predefined values for attribute "type"**	-	**dtSTRING**	250	-	1.2_fd

Predefined values for attribute "type"			
Designation	Attribute value	Explanation	l.chg. in ver.
Buyer-specific number	buyer_specific	Identification number defined by the buyer	-
Customer specific number	customer_specific	Identification number defined by the customer	2005fd
Dun & Bradstreet	duns	DUNS-Number (see also **http://dbuk.dnb.com/english/DataBase/duns.htm**)	-
Global location number	iln	Internationally called GLN (see GLN below)	-
Global location number	gln	Global Location Number GLN (see also **http://www.ean-int.org/locations.html**)	2005fd
Party-specific number	party_specific	Identification number defined by the respective party	2005fd
Supplier-specific number	supplier_specific	Identification number defined by the supplier	-

Copyright © 2022 BME e.V. - BMEcat® Version 2005.2
Copyright © 2010-2021 BME e.V. - BMEcat® Version 2005.1
Copyright © 2005-2009 BME e.V. - BMEcat® Version 2005
Copyright © 1998–2004 Fraunhofer IAO, Stuttgart; Universität Essen BLI - BMEcat® Version 1.2

Predefined values for attribute "type"			
Designation	Attribute value	Explanation	l.chg. in ver.
Other codification standard	User defined value, format: \w{1,250}	Identificator of codification standard. "\w{1,250}" means that the identificator of the codification standard has to be at least 1 chraracter long up to a maximum of 250 characters.	-

Copyright © 2022 BME e.V. - BMEcat® Version 2005.2
Copyright © 2010-2021 BME e.V. - BMEcat® Version 2005.1
Copyright © 2005-2009 BME e.V. - BMEcat® Version 2005
Copyright © 1998–2004 Fraunhofer IAO, Stuttgart; Universität Essen BLI - BMEcat® Version 1.2

UNITS

(Units of measurement)

This element defines the units of measurement of the features of a classification system. Each unit of measurement is defined by a **UNIT** element. Eventually, the units of measurement can be used to describe features.

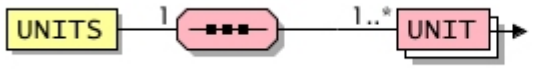

General					
Used in	Default value	Data type	Field length	Lang. specific	l.chg. in ver.
CLASSIFICATION_SYSTEM	-	-	-	-	-

Elements									
Designation	Element name	Mandatory/ Optional	Single/ Multiple	Explanation	Default value	Data type	Field length	Lang. specific	l.chg. in ver.
Unit of measurement	**UNIT** **- system**	Mandatory	Multiple	Describes a unit of measurement used in the classification system. The element **UNIT** must not be confused with the data types **dtUNIT** or **dtPUNIT**.	-	-	-	-	2005fd

Example

```
<UNITS>
    <UNIT system="unece">
        <UNIT_ID>C62</UNIT_ID>
        <UNIT_NAME>piece</UNIT_NAME>
    </UNIT>
    <UNIT system="unece">
        <UNIT_ID>INH</UNIT_ID>
        <UNIT_NAME>inch</UNIT_NAME>
        <UNIT_DESCR>corresponds to 2.54 cm</UNIT_DESCR>
    </UNIT>
     ...
</UNITS>
```

Copyright © 2022 BME e.V. - BMEcat® Version 2005.2
Copyright © 2010-2021 BME e.V. - BMEcat® Version 2005.1
Copyright © 2005-2009 BME e.V. - BMEcat® Version 2005
Copyright © 1998–2004 Fraunhofer IAO, Stuttgart; Universität Essen BLI - BMEcat® Version 1.2

UNIT

(Unit of measurement)

Describes a unit of measurement used in the classification system.

The element **UNIT** must not be confused with the data types **dtUNIT** or **dtPUNIT**.

2005fd: This element has been extended by the following sub-elements:**UNIT_SHORTNAME**, **UNIT_CODE**, **UNIT_URI**

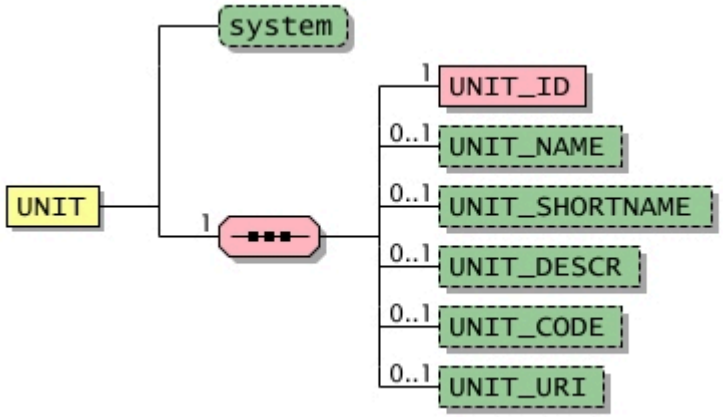

General					
Used in	Default value	Data type	Field length	Lang. specific	l.chg. in ver.
UNITS	-	-	-	-	2005fd

Attributes								
Designation	Attribute name	Mandatory/ optional	Explanation	Default value	Data type	Field length	Lang. specific	l.chg. in ver.
Unit system	system	Optional	This attribute sets the unit system to which the unit of measurement belongs. See also: **Predefined values for attribute "system"**	-	**dtSTRING**	20	-	-

Copyright © 2022 BME e.V. - BMEcat® Version 2005.2
Copyright © 2010-2021 BME e.V. - BMEcat® Version 2005.1
Copyright © 2005-2009 BME e.V. - BMEcat® Version 2005
Copyright © 1998–2004 Fraunhofer IAO, Stuttgart; Universität Essen BLI - BMEcat® Version 1.2

Predefined values for attribute "system"			
Designation	Attribute value	Explanation	l.chg. in ver.
SI system	si	Units according to Système International d'unités (**http://www.bipm.org/en/si**)	-
UNECE system	unece	Units according to UNECE Recommendation 20 (see also **http://www.unece.org/cefact/recommendations/rec20/rec20_rev3_Annex1e.pdf**, see data types UNIT and PUNIT)	-
Other system	User defined value, format: \w{1,20}	Identification of the system. "\w{1,20}" means that the system identification has to be at least 1 chraracter long up to a maximum of 20 characters.	-

Elements									
Designation	Element name	Mandatory/ Optional	Single/ Multiple	Explanation	Default value	Data type	Field length	Lang. specific	l.chg. in ver.
Unit ID	**UNIT_ID**	Mandatory	Single	Specifies the unique identification of the unit of measurement within the classification system; this identification is required for the description of multi-lingual units within a classification system as well as for referencing the measuring units from the classification group. Identification from standard unit systems should be used (e.g., UNECE, SI) Example: C62 (piece according to UNECE Recommendation 20, **http://www.unece.org/cefact/rec/rec20en.htm**)	-	**dtSTRING**	60	-	-
Unit name	**UNIT_NAME**	Optional	Single	Contains the name of the unit of measurement, e.g., "Megahertz" 2005fd: The maximum length has been extended from 60 characters to 80 characters.	-	**dtMLSTRING**	80	Yes	2005fd
Unit short name	**UNIT_SHORTNAME**	Optional	Single	Short name of the unit in addition to its name, e.g., "MHz" for "Megahertz" 2005fd: New element	-	**dtMLSTRING**	80	Yes	2005fd
Unit description	**UNIT_DESCR**	Optional	Single	This element can be used to describe the unit of measurement in more detail. 2005: The maximum length has been extended from 250 characters to 16000 characters.	-	**dtMLSTRING**	16000	Yes	2005
Code of the unit	**UNIT_CODE**	Optional	Single	Code of the unit in addition to its name, e.g., "MTR" for "Meter", "VLT" for "VOLT" 2005fd: New element	-	**dtSTRING**	20	-	2005fd
URI of the unit	**UNIT_URI**	Optional	Single	This element can be used to point to an URI that presents additional information on the unit, e.g., a document or standard	-	**dtSTRING**	255	-	2005fd

Copyright © 2022 BME e.V. - BMEcat® Version 2005.2
Copyright © 2010-2021 BME e.V. - BMEcat® Version 2005.1
Copyright © 2005-2009 BME e.V. - BMEcat® Version 2005
Copyright © 1998–2004 Fraunhofer IAO, Stuttgart; Universität Essen BLI - BMEcat® Version 1.2

Elements

Designation	Element name	Mandatory/ Optional	Single/ Multiple	Explanation	Default value	Data type	Field length	Lang. specific	I.chg. in ver.
				2005fd: New element					

Copyright © 2022 BME e.V. - BMEcat® Version 2005.2
Copyright © 2010-2021 BME e.V. - BMEcat® Version 2005.1
Copyright © 2005-2009 BME e.V. - BMEcat® Version 2005
Copyright © 1998–2004 Fraunhofer IAO, Stuttgart; Universität Essen BLI - BMEcat® Version 1.2

FT_GROUPS

(Feature groups)

This element defines feature groups, which build logical groups or categories of features within in the classification system.

2005fd: New element

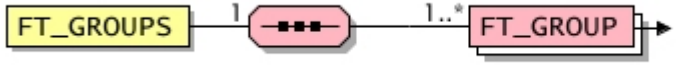

General					
Used in	Default value	Data type	Field length	Lang. specific	l.chg. in ver.
CLASSIFICATION_SYSTEM	-	-	-	-	2005fd

Elements									
Designation	Element name	Mandatory/ Optional	Single/ Multiple	Explanation	Default value	Data type	Field length	Lang. specific	l.chg. in ver.
Feature group	FT_GROUP	Mandatory	Multiple	Specifies a feature group	-	-	-	-	2005fd

Copyright © 2022 BME e.V. - BMEcat® Version 2005.2
Copyright © 2010-2021 BME e.V. - BMEcat® Version 2005.1
Copyright © 2005-2009 BME e.V. - BMEcat® Version 2005
Copyright © 1998–2004 Fraunhofer IAO, Stuttgart; Universität Essen BLI - BMEcat® Version 1.2

FT_GROUP

(Feature group)

This element specifies a feature group, e.g., "Dimensions" as a group for the features "width", "length", and "heigth".

2005fd: New element

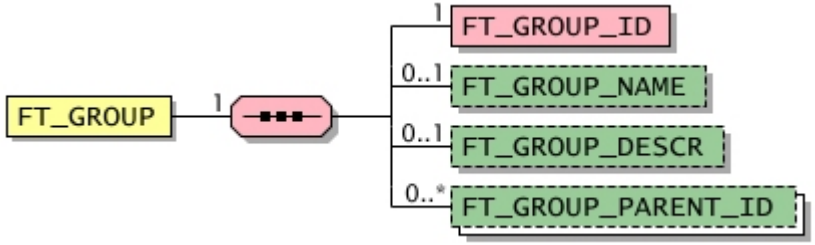

General					
Used in	Default value	Data type	Field length	Lang. specific	l.chg. in ver.
FT_GROUPS	-	-	-	-	2005fd

Elements

Designation	Element name	Mandatory/ Optional	Single/ Multiple	Explanation	Default value	Data type	Field length	Lang. specific	l.chg. in ver.
Feature group ID	**FT_GROUP_ID**	Mandatory	Single	Specifies the unique identification of the feature group within the classification system; this identification is required for referencing the feature group when defining a feature. 2005fd: New element	-	dtSTRING	60	-	2005fd
Feature group name	**FT_GROUP_NAME**	Optional	Single	Specifies the name of the feature group; e.g., "Technical features" 2005: New element	-	dtMLSTRING	80	Yes	2005
Feature group description	**FT_GROUP_DESCR**	Optional	Single	This element can be used to describe the feature group in more detail. 2005fd: New element	-	dtMLSTRING	250	Yes	2005fd

Copyright © 2022 BME e.V. - BMEcat® Version 2005.2
Copyright © 2010-2021 BME e.V. - BMEcat® Version 2005.1
Copyright © 2005-2009 BME e.V. - BMEcat® Version 2005
Copyright © 1998–2004 Fraunhofer IAO, Stuttgart; Universität Essen BLI - BMEcat® Version 1.2

Elements									
Designation	Element name	Mandatory/ Optional	Single/ Multiple	Explanation	Default value	Data type	Field length	Lang. specific	I.chg. in ver.
Parent group of the feature group	**FT_GROUP_PARENT_ID**	Optional	Multiple	This element references the unique identification of the parent group for the respective feature group (**FT_GROUP_ID**). If there is no parent group for the group, this element must not be used. 2005fd: New element	-	**dtSTRING**	60	-	2005fd

Copyright © 2022 BME e.V. - BMEcat® Version 2005.2
Copyright © 2010-2021 BME e.V. - BMEcat® Version 2005.1
Copyright © 2005-2009 BME e.V. - BMEcat® Version 2005
Copyright © 1998–2004 Fraunhofer IAO, Stuttgart; Universität Essen BLI - BMEcat® Version 1.2

CLASSIFICATION_SYSTEM_FEATURE_TEMPLATES

(Features of the classification system)

This element contains all features that are defined within the classification system. Based on these, class-specific feature lists can be build (see **CLASSIFICATION_GROUP_FEATURE_TEMPLATES**).

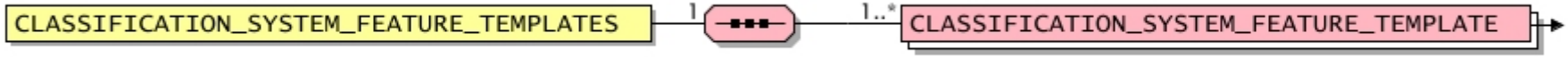

General

Used in	Default value	Data type	Field length	Lang. specific	l.chg. in ver.
CLASSIFICATION_SYSTEM	-	-	-	-	-

Elements

Designation	Element name	Mandatory/ Optional	Single/ Multiple	Explanation	Default value	Data type	Field length	Lang. specific	l.chg. in ver.
Feature of the classification system	**CLASSIFICATION_ SYSTEM_FEATURE_ TEMPLATE**	Mandatory	Multiple	Defines a feature of the classification system independently of its usage for a specific group. Those parts of the definition, which depend on the group, can be described by the **CLASSIFICATION_GROUP_FEATURE_TEMPLATE** element.	-	-	-	-	2005

Example

```
<CLASSIFICATION_SYSTEM_FEATURE_TEMPLATES>
    <CLASSIFICATION_SYSTEM_FEATURE_TEMPLATE>
        <FT_ID>13</FT_ID>
        <FT_NAME>Version</FT_NAME>
    </CLASSIFICATION_SYSTEM_FEATURE_TEMPLATE>
    <CLASSIFICATION_SYSTEM_FEATURE_TEMPLATE>
        <FT_ID>1300</FT_ID>
        <FT_NAME>Type of suspension</FT_NAME>
    </CLASSIFICATION_SYSTEM_FEATURE_TEMPLATE>
     ...
</CLASSIFICATION_SYSTEM_FEATURE_TEMPLATES>
```

Copyright © 2022 BME e.V. - BMEcat® Version 2005.2
Copyright © 2010-2021 BME e.V. - BMEcat® Version 2005.1
Copyright © 2005-2009 BME e.V. - BMEcat® Version 2005
Copyright © 1998–2004 Fraunhofer IAO, Stuttgart; Universität Essen BLI - BMEcat® Version 1.2

CLASSIFICATION_SYSTEM_FEATURE_TEMPLATE

(Feature of the classification system)

This element defines a feature of the classification system independently of its usage for a specific group. By it, multiple usage of the same or similar feature is enabled.

Those parts of the definition, which depend on the group, can be described by the **CLASSIFICATION_GROUP_FEATURE_TEMPLATE** element.

2005fd: The element was revised and the following sub-elements were added: **FT_SHORTNAME**, **FT_VERSION**, **FT_GROUPID**, **FT_GROUPNAME**, **FT_NAME**, **FEATURE_CONTENT**
2005: The sub-elements **FT_GROUPID** and **FT_GROUPNAME** were replaced by the new sub-elements **FT_GROUP_IDREF** and **FT_GROUP_NAME** respectively. The element itself was transformed into an XML-type. The sub-element **FT_DEPENDENCIES** was added.

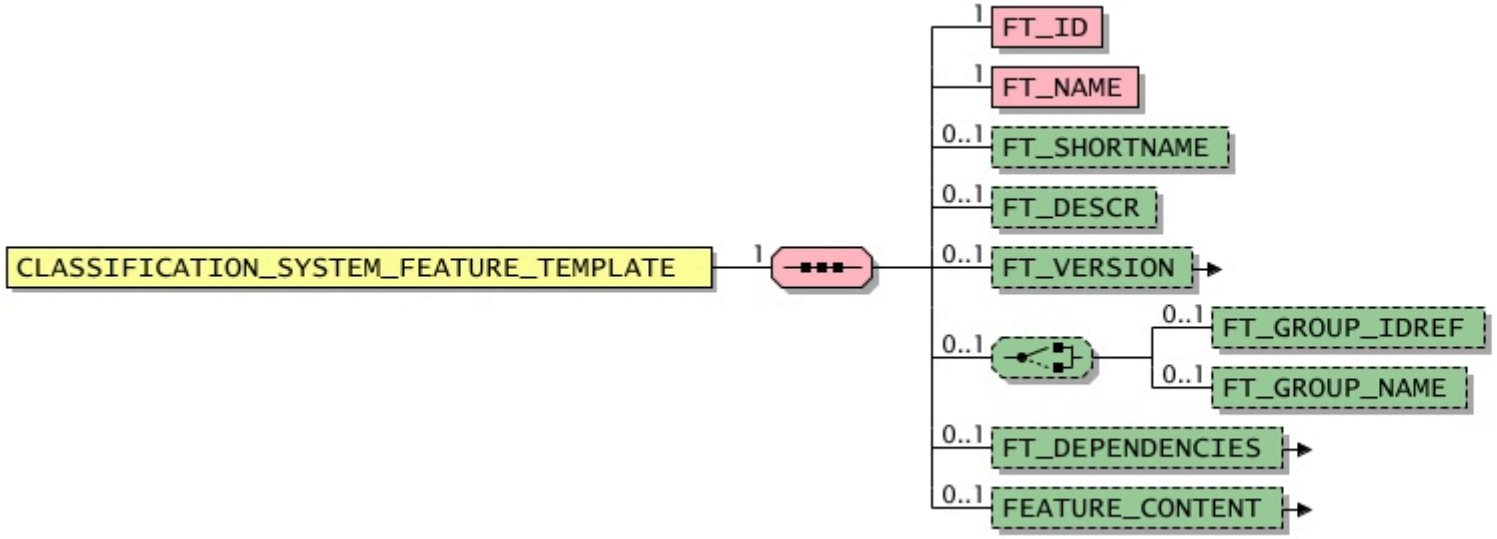

General					
Used in	Default value	Data type	Field length	Lang. specific	l.chg. in ver.
CLASSIFICATION_SYSTEM_FEATURE_TEMPLATES	-	-	-	-	2005

Copyright © 2022 BME e.V. - BMEcat® Version 2005.2
Copyright © 2010-2021 BME e.V. - BMEcat® Version 2005.1
Copyright © 2005-2009 BME e.V. - BMEcat® Version 2005
Copyright © 1998–2004 Fraunhofer IAO, Stuttgart; Universität Essen BLI - BMEcat® Version 1.2

Elements

Designation	Element name	Mandatory/ Optional	Single/ Multiple	Explanation	Default value	Data type	Field length	Lang. specific	l.chg. in ver.
Feature identifier	**FT_ID**	Mandatory	Single	Unique identifier of the feature. This identifier ist required for referencing the feature from a classification group.	-	**dtSTRING**	60	-	-
Feature name	**FT_NAME**	Mandatory	Single	This element defines the feature name. 2005fd: The maximum length has been extended from 60 characters to 80 characters.	-	**dtMLSTRING**	80	Yes	2005fd
Feature short name	**FT_SHORTNAME**	Optional	Single	Short name of the feature in addition to its name 2005fd: New element	-	**dtMLSTRING**	80	Yes	2005fd

Feature description	**FT_DESCR**	Optional	Single	Description of the feature and its semantics; it does not describe the value of the feature.
				This element is especially usefull for describing user-defined, non-standardized features.
				
				2005fd: The maximum length has been extended from 250 characters to 16,000 characters.
				Example
				`<FT_NAME>Colour</FT_NAME>`
				`<FT_DESCR>The feature color represents the color of the tabletop, but not the colour of the table legs.</FT_DESCR>`
					-	**dtMLSTRING**	16000	Yes	2005fd

Version of the feature	**FT_VERSION**	Optional	Single	Detailled information on the version of the feature 	-	-	-	-	2005fd
Feature group ID reference	**FT_GROUP_IDREF**	Optional	Single	Reference to the unique ID of a feature group. The reference must point to a **FT_GROUP_ID**, which has been defined in the **FT_GROUP** element for the respective classification system. 2005: New element	-	**dtSTRING**	60	-	2005
Feature group name	**FT_GROUP_NAME**	Optional	Single	Specifies the name of the feature group; e.g., "Technical features" 2005: New element	-	**dtMLSTRING**	80	Yes	2005
Feature dependencies	**FT_DEPENDENCIES**	Optional	Single	List of features on which the current feature depends	-	-	-	-	2005

Copyright © 2022 BME e.V. - BMEcat® Version 2005.2
Copyright © 2010-2021 BME e.V. - BMEcat® Version 2005.1
Copyright © 2005-2009 BME e.V. - BMEcat® Version 2005
Copyright © 1998–2004 Fraunhofer IAO, Stuttgart; Universität Essen BLI - BMEcat® Version 1.2

Elements

Designation	Element name	Mandatory/ Optional	Single/ Multiple	Explanation	Default value	Data type	Field length	Lang. specific	l.chg. in ver.
Feature content definition	**FEATURE_CONTENT**	Optional	Single	Detailled information on the feature content, e.g., data type, unit of measurement, domain of values, synonyms, and many more characteristics	-	-	-	-	2005

Copyright © 2022 BME e.V. - BMEcat® Version 2005.2
Copyright © 2010-2021 BME e.V. - BMEcat® Version 2005.1
Copyright © 2005-2009 BME e.V. - BMEcat® Version 2005
Copyright © 1998–2004 Fraunhofer IAO, Stuttgart; Universität Essen BLI - BMEcat® Version 1.2

FT_VERSION

(Version of the feature)

This element contains detailled information on the version of the feature and its version history.

2005fd: New element

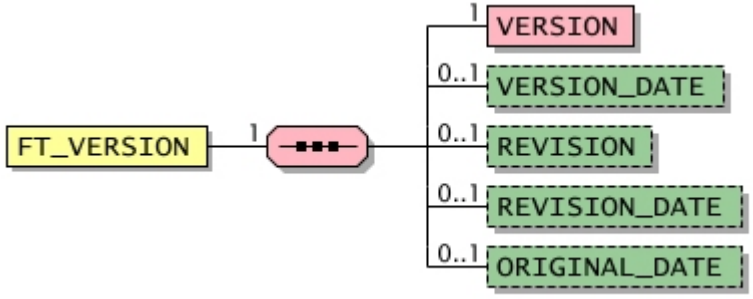

General					
Used in	Default value	Data type	Field length	Lang. specific	l.chg. in ver.
CLASSIFICATION_SYSTEM_FEATURE_TEMPLATE, **FTEMPLATE**	-	-	-	-	2005fd

Elements									
Designation	Element name	Mandatory/ Optional	Single/ Multiple	Explanation	Default value	Data type	Field length	Lang. specific	l.chg. in ver.
Version	**VERSION**	Mandatory	Single	Detailled information on the version 2005fd: New element	-	**dtSTRING**	20	-	2005fd
Version date	**VERSION_DATE**	Optional	Single	Date of the given version 2005fd: New element	-	**dtDATETIME**	-	-	2005fd
Revision	**REVISION**	Optional	Single	Revision number of the given version 2005fd: New element	-	**dtSTRING**	20	-	2005fd

Copyright © 2022 BME e.V. - BMEcat® Version 2005.2
Copyright © 2010-2021 BME e.V. - BMEcat® Version 2005.1
Copyright © 2005-2009 BME e.V. - BMEcat® Version 2005
Copyright © 1998–2004 Fraunhofer IAO, Stuttgart; Universität Essen BLI - BMEcat® Version 1.2

Elements									
Designation	Element name	Mandatory/ Optional	Single/ Multiple	Explanation	Default value	Data type	Field length	Lang. specific	l.chg. in ver.
Revision date	**REVISION_DATE**	Optional	Single	Date of the latest revision 2005fd: New element	-	**dtDATETIME**	-	-	2005fd
Original date	**ORIGINAL_DATE**	Optional	Single	Date of the first version in its first revision 2005fd: New element	-	**dtDATETIME**	-	-	2005fd

Copyright © 2022 BME e.V. - BMEcat® Version 2005.2
Copyright © 2010-2021 BME e.V. - BMEcat® Version 2005.1
Copyright © 2005-2009 BME e.V. - BMEcat® Version 2005
Copyright © 1998–2004 Fraunhofer IAO, Stuttgart; Universität Essen BLI - BMEcat® Version 1.2

FT_DEPENDENCIES

(Feature dependencies)

This element contais a list of feature on which the current feature depends; hence it is possible to express, for instance, that the feature 'length' depends on the feature 'temperature'. The features that determine the current feature are referenced by their identifier.

2005: New element

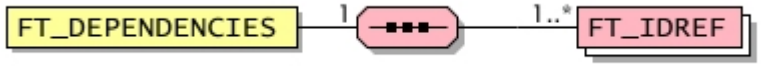

General					
Used in	Default value	Data type	Field length	Lang. specific	l.chg. in ver.
CLASSIFICATION_GROUP_FEATURE_TEMPLATE, **CLASSIFICATION_SYSTEM_FEATURE_TEMPLATE**, **FTEMPLATE**	-	-	-	-	2005

Elements									
Designation	Element name	Mandatory/ Optional	Single/ Multiple	Explanation	Default value	Data type	Field length	Lang. specific	l.chg. in ver.
Feature reference	**FT_IDREF**	Mandatory	Multiple	Reference to the unique ID of a feature (see**CLASSIFICATION_SYSTEM_FEATURE_TEMPLATE**)	-	**dtSTRING**	60	-	-

Copyright © 2022 BME e.V. - BMEcat® Version 2005.2
Copyright © 2010-2021 BME e.V. - BMEcat® Version 2005.1
Copyright © 2005-2009 BME e.V. - BMEcat® Version 2005
Copyright © 1998–2004 Fraunhofer IAO, Stuttgart; Universität Essen BLI - BMEcat® Version 1.2

FEATURE_CONTENT

(Feature content definition)

This element contains detailled information on the feature content, e.g., data type, unit of measurement, application, synonyms, and many more characteristics.

2005fd: New element
2005: The sub-element **FT_DOMAIN_VALUES** was renamed to **FT_VALUES**.

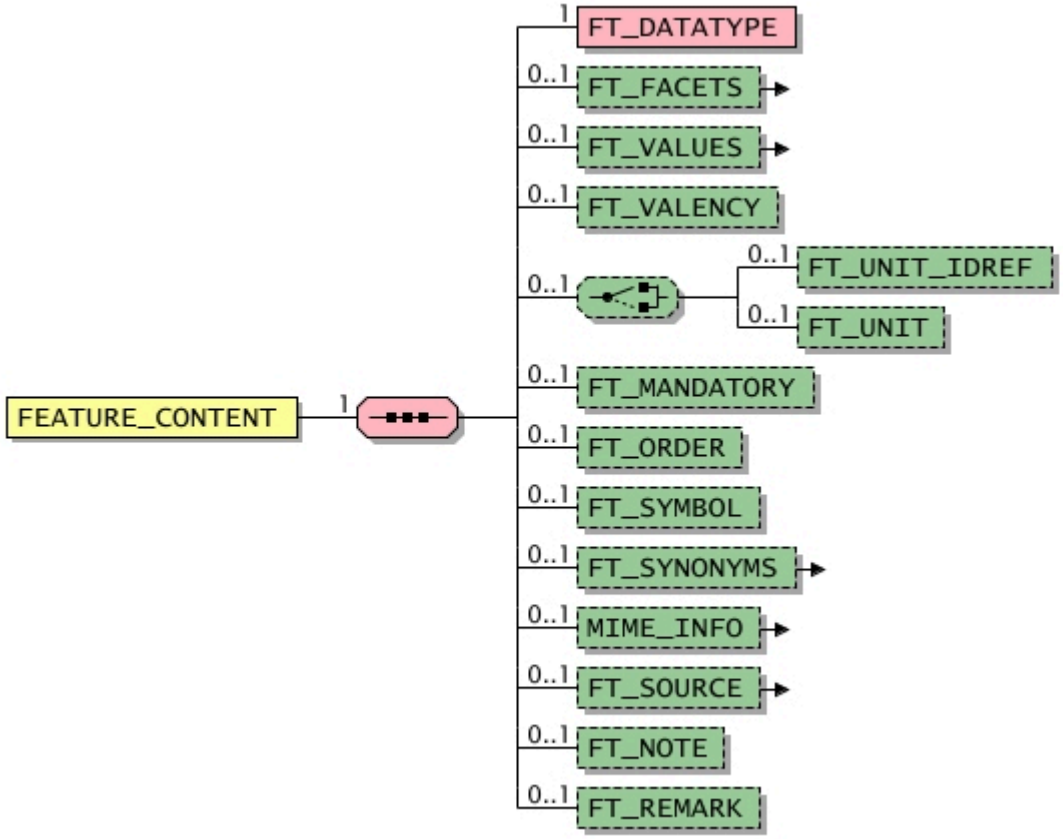

Copyright © 2022 BME e.V. - BMEcat® Version 2005.2
Copyright © 2010-2021 BME e.V. - BMEcat® Version 2005.1
Copyright © 2005-2009 BME e.V. - BMEcat® Version 2005
Copyright © 1998–2004 Fraunhofer IAO, Stuttgart; Universität Essen BLI - BMEcat® Version 1.2

General

Used in	Default value	Data type	Field length	Lang. specific	l.chg. in ver.
CLASSIFICATION_SYSTEM_FEATURE_TEMPLATE, **FTEMPLATE**	-	-	-	-	2005

Elements

Designation	Element name	Mandatory/ Optional	Single/ Multiple	Explanation	Default value	Data type	Field length	Lang. specific	l.chg. in ver.
Feature data type	**FT_DATATYPE**	Mandatory	Single	This element contains the data type of the feature. See also: **Permitted values for element FT_DATATYPE**	-	**dtSTRING**	20	-	-
Data type restrictions	**FT_FACETS**	Optional	Single	List of data type restrictions 	-	-	-	-	2005fd
Feature domain values	**FT_VALUES**	Optional	Single	List of allowed values for the feature (only available for enumerative features) 	-	-	-	-	2005
Feature valency	**FT_VALENCY**	Optional	Single	Indicates whether the product feature can have more than one value (**multivalent**) or only one value (**univalent**). 2005fd: New element See also: **Permitted values for element FT_VALENCY**	univalent	**dtSTRING**	20	-	2005fd
Feature unit ID reference	**FT_UNIT_IDREF**	Optional	Single	Reference to the unique ID of a unit of measurement. The reference must point to a **UNIT_ID**, which has been defined in the **UNIT** element for the respective classification system. This element can only be used for defining features of a classification system. Therefore, it can not used on the product level for defining static features (**PRODUCT_FEATURES**) or for configuration purposes (**CONFIG_FEATURE**). 2005fd: This new element replaces with a modified semantics the former **FT_UNIT** element.	-	**dtSTRING**	60	-	2005fd
Feature unit	**FT_UNIT**	Optional	Single	Unit of measurement for the feature; the unit should be coded in accordance with the **dtUNIT** data type. 2005fd: The maximum length has been extended from 20 characters to 80 characters.	-	**dtSTRING**	80	-	2005fd
Mandatory feature	**FT_MANDATORY**	Optional	Single	This element specifies, whether the feature is mandatory or optional; if so, the feature must be used when classifying a respective product.	-	**dtBOOLEAN**	-	-	-

Copyright © 2022 BME e.V. - BMEcat® Version 2005.2
Copyright © 2010-2021 BME e.V. - BMEcat® Version 2005.1
Copyright © 2005-2009 BME e.V. - BMEcat® Version 2005
Copyright © 1998–2004 Fraunhofer IAO, Stuttgart; Universität Essen BLI - BMEcat® Version 1.2

Elements

Designation	Element name	Mandatory/ Optional	Single/ Multiple	Explanation	Default value	Data type	Field length	Lang. specific	l.chg. in ver.
Feature order	**FT_ORDER**	Optional	Single	Defines the order (sequence) in which the feature has to be presented in the target system.	-	**dtINTEGER**	-	-	-
Feature symbol	**FT_SYMBOL**	Optional	Single	Symbol of the feature	-	**dtMLSTRING**	20	Yes	1.2
Feature synonyms	**FT_SYNONYMS**	Optional	Single	List of synonyms for the feature name	-	-	-	-	2005fd
Additional multimedia information	**MIME_INFO**	Optional	Single	Information about multimedia files	-	-	-	-	-
Feature source	**FT_SOURCE**	Optional	Single	Source for the feature definition which has been given in the **FT_DESCR** element; e.g. a reference to a document, standard or definition describing the feature.	-	-	-	-	2005
Feature note	**FT_NOTE**	Optional	Single	The note should be extracted from the source of the definition (element **FT_SOURCE**). It increases the tangibility of the definition. This element has been adopted from ISO 13584. 2005fd: New element	-	**dtMLSTRING**	16000	Yes	2005fd
Feature remark	**FT_REMARK**	Optional	Single	Remark giving additional information about the feature and its definition. This element has been adopted from ISO 13584. 2005fd: New element	-	**dtMLSTRING**	16000	Yes	2005fd

Permitted values for element FT_DATATYPE

Designation	Element value	Explanation	l.chg. in ver.
Alphanumeric	alphanumeric	Alphanumeric string, see also data type **dtSTRING**	-
Boolean value	boolean	"true" or "false", see data type **dtBOOLEAN**	-
Class instance type	class_instance_type	Reference to a classification group. By this type it is possible to define a feature that establishes a relationship to another product class; e.g., feature "component". This type has been adopted from the ISO 13584 standard. 2005: New value	2005
Positive number	count	Positive number, see also data type **dtCOUNT**	2005fd

Copyright © 2022 BME e.V. - BMEcat® Version 2005.2
Copyright © 2010-2021 BME e.V. - BMEcat® Version 2005.1
Copyright © 2005-2009 BME e.V. - BMEcat® Version 2005
Copyright © 1998–2004 Fraunhofer IAO, Stuttgart; Universität Essen BLI - BMEcat® Version 1.2

Permitted values for element FT_DATATYPE			
Designation	Element value	Explanation	l.chg. in ver.
		 2005fd: New value	
Currency	currency	Currency code, see also data type **dtCURRENCIES** 2005: New value	2005
Date	date	Date, see also data type **dtDATETIME** 2005fd: New value	2005fd
Date and time	date-time	Date and time, see also data type **dtDATETIME** 2005fd: New value	2005fd
Floating-point number	float	Floating-point number, see also data type **dtFLOAT** 2005fd: New value	2005fd
Integer value	integer	Integer value, see also data type **dtINTEGER**	-
Boolean value	logic	"true" or "false", see data type **dtBOOLEAN**	-
Named type	named_type	Named type. This type has been adopted from the ISO 13584 standard. 2005: New value	2005
Number	number	Number, see also data type **dtNUMBER**	-
Numeric	numeric	Numeric, see also data type **dtNUMBER**	-
Integer range	range-integer	Range definition by two integer values (see also**FEATURE , Beispiel 1**)	-
Numeric range	range-numeric	Range definition by two numeric values (see also**FEATURE , Beispiel 1**)	-
Alphanumeric set	set-alphanumeric	Set of alphanumeric values (see also **FEATURE , Beispiel 1**)	-
Integer set	set-integer	Set of integer values (see also **FEATURE , Beispiel 1**)	-
Numeric set	set-numeric	Set of numeric values (see also **FEATURE , Beispiel 1**)	-
Alphanumeric	string	Alphanumeric string, see also data type **dtSTRING**	-
Time	time	Time, see also data type **dtTIME**	2005fd

Copyright © 2022 BME e.V. - BMEcat® Version 2005.2
Copyright © 2010-2021 BME e.V. - BMEcat® Version 2005.1
Copyright © 2005-2009 BME e.V. - BMEcat® Version 2005
Copyright © 1998–2004 Fraunhofer IAO, Stuttgart; Universität Essen BLI - BMEcat® Version 1.2

Permitted values for element FT_DATATYPE			
Designation	Element value	Explanation	l.chg. in ver.
		2005fd: New value	

Permitted values for element FT_VALENCY			
Designation	Element value	Explanation	l.chg. in ver.
Multivalent	multivalent	The feature can have more than one value.	2005fd
Univalent	**univalent**	The feature can only have one value.	2005fd

Copyright © 2022 BME e.V. - BMEcat® Version 2005.2
Copyright © 2010-2021 BME e.V. - BMEcat® Version 2005.1
Copyright © 2005-2009 BME e.V. - BMEcat® Version 2005
Copyright © 1998–2004 Fraunhofer IAO, Stuttgart; Universität Essen BLI - BMEcat® Version 1.2

FT_FACETS

(Data type restrictions)

This element contains a list of data type restrictions. The restrictions (**FT_FACET**) are based on: XML Schema Part 2: Data types Second Edition - W3C Recommendation 28 October 2004 (**http://www.w3.org/TR/xmlschema-2/#dt-constraining-facet**)

2005fd: New element

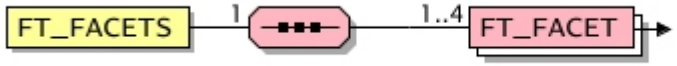

General					
Used in	Default value	Data type	Field length	Lang. specific	l.chg. in ver.
FEATURE_CONTENT	-	-	-	-	2005fd

Elements									
Designation	Element name	Mandatory/ Optional	Single/ Multiple	Explanation	Default value	Data type	Field length	Lang. specific	l.chg. in ver.
Data type restriction	**FT_FACET** **- type**	Mandatory	Multiple (4)	Restriction of the datatpye, e.g. maximum field length	-	**dtSTRING**	20	-	2005fd

Example 1: String
The value of the feature ist a string, which has length between 1 and 20 characters.

```
<FEATURE_CONTENT>
    <FT_DATATYPE>string</FT_DATATYPE>
    <FT_FACETS>
        <FT_FACET type="minLength">1</FT_FACET>
        <FT_FACET type="maxLength">20</FT_FACET>
    </FT_FACETS>
</FEATURE_CONTENT>
```

Example 2: Floating-point number
The value of the feature is a floating-point number, which is in the interval]-5,5] and has no more than 4 digits and 2 decimal places.

```
<FEATURE_CONTENT>
    <FT_DATATYPE>float</FT_DATATYPE>
```

Copyright © 2022 BME e.V. - BMEcat® Version 2005.2
Copyright © 2010-2021 BME e.V. - BMEcat® Version 2005.1
Copyright © 2005-2009 BME e.V. - BMEcat® Version 2005
Copyright © 1998–2004 Fraunhofer IAO, Stuttgart; Universität Essen BLI - BMEcat® Version 1.2

```
    <FT_FACETS>
        <FT_FACET type="minExclusive">-5</FT_FACET>
        <FT_FACET type="maxInclusive">5</FT_FACET>
        <FT_FACET type="totalDigits">4</FT_FACET>
        <FT_FACET type="fractionDigits">2</FT_FACET>
    </FT_FACETS>
</FEATURE_CONTENT>
```

Copyright © 2022 BME e.V. - BMEcat® Version 2005.2
Copyright © 2010-2021 BME e.V. - BMEcat® Version 2005.1
Copyright © 2005-2009 BME e.V. - BMEcat® Version 2005
Copyright © 1998–2004 Fraunhofer IAO, Stuttgart; Universität Essen BLI - BMEcat® Version 1.2

FT_FACET

(Data type restriction)

This element defines a restriction on a data type, e.g., maximum length of a character string.

2005fd: New element

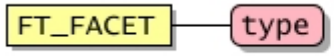

General					
Used in	Default value	Data type	Field length	Lang. specific	l.chg. in ver.
FT_FACETS	-	**dtSTRING**	20	-	2005fd

Attributes								
Designation	Attribute name	Mandatory/ optional	Explanation	Default value	Data type	Field length	Lang. specific	l.chg. in ver.
Restriction type	type	Mandatory	This attribute contains the type of the restriction. See also: **Permitted values for attribute "type"**	-	**dtSTRING**	20	-	2005fd

Permitted values for attribute "type"			
Designation	Attribute value	Explanation	l.chg. in ver.
Minimum length	minLength	Defines the minimum length of all string data types, i.e. 'alphanumeric', 'set-alphanumeric' or 'string'.	2005fd
Maximum length	maxLength	Defines the maximum length of string data types, i.e. 'alphanumeric', 'set-alphanumeric' or 'string'.	2005fd
Included lower bound	minInclusive	Defines the included lower bound of numeric data types, i.e. 'count', 'float', 'integer', 'number', 'numeric', 'range-inter', 'range-numeric', 'set-integer' or 'set-numeric'.	2005fd
Included upper bound	maxInclusive	Defines the included upper bound of numeric data types, i.e. 'count', 'float', 'integer', 'number', 'numeric', 'range-inter', 'range-numeric', 'set-integer' or 'set-numeric'.	2005fd
Excluded lower bound	minExclusive	Defines the excluded lower bound of numeric data types, i.e. 'count', 'float', 'integer', 'number', 'numeric', 'range-inter', 'range-numeric', 'set-integer' or 'set-numeric'.	2005fd
Excluded upper bound	maxExclusive	Defines the excluded upper bound of numeric data types, i.e. 'count', 'float', 'integer', 'number', 'numeric', 'range-inter', 'range-numeric', 'set-integer' or 'set-numeric'.	2005fd

Copyright © 2022 BME e.V. - BMEcat® Version 2005.2
Copyright © 2010-2021 BME e.V. - BMEcat® Version 2005.1
Copyright © 2005-2009 BME e.V. - BMEcat® Version 2005
Copyright © 1998–2004 Fraunhofer IAO, Stuttgart; Universität Essen BLI - BMEcat® Version 1.2

Permitted values for attribute "type"			
Designation	Attribute value	Explanation	l.chg. in ver.
Digits	totalDigits	Defines the maximum number of digits of numeric data types, i.e. 'count', 'float', 'integer', 'number', 'numeric', 'range-integer', 'range-numeric', 'set-integer' oder 'set-numeric'.	2005fd
Decimal places	fractionDigits	Defines the maximum number of decimal places.	2005fd

Copyright © 2022 BME e.V. - BMEcat® Version 2005.2
Copyright © 2010-2021 BME e.V. - BMEcat® Version 2005.1
Copyright © 2005-2009 BME e.V. - BMEcat® Version 2005
Copyright © 1998–2004 Fraunhofer IAO, Stuttgart; Universität Essen BLI - BMEcat® Version 1.2

FT_VALUES

(Feature domain values)

This element contains a list of allowed values for the feature (only available for enumerative features).

2005fd: New element
2005: This element was named **FT_DOMAIN_VALUES** and is now named **FT_VALUES**. The sub-element **FT_DOMAIN_VALUE** was renamed to **FT_VALUE**.

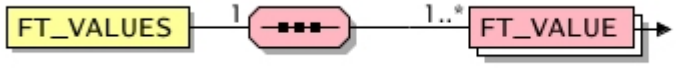

General					
Used in	Default value	Data type	Field length	Lang. specific	l.chg. in ver.
CLASSIFICATION_GROUP_FEATURE_TEMPLATE, **FEATURE_CONTENT**	-	-	-	-	2005

Elements									
Designation	Element name	Mandatory/ Optional	Single/ Multiple	Explanation	Default value	Data type	Field length	Lang. specific	l.chg. in ver.
Feature value	**FT_VALUE**	Mandatory	Multiple	Value being part of the list of values for this feature	-	-	-	-	2005

Copyright © 2022 BME e.V. - BMEcat® Version 2005.2
Copyright © 2010-2021 BME e.V. - BMEcat® Version 2005.1
Copyright © 2005-2009 BME e.V. - BMEcat® Version 2005
Copyright © 1998–2004 Fraunhofer IAO, Stuttgart; Universität Essen BLI - BMEcat® Version 1.2

FT_VALUE

(Feature value)

This element defines a value as part of the list of values for this feature

2005fd: New element
2005: This element was named **FT_DOMAIN_VALUE** in BMEcat 2005 final draft, now it is named **FT_VALUE**.

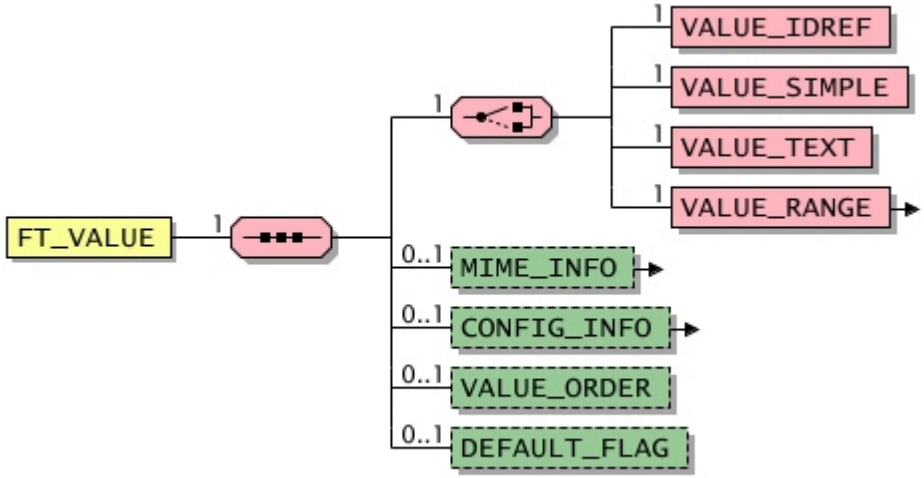

General					
Used in	Default value	Data type	Field length	Lang. specific	l.chg. in ver.
FT_VALUES	-	-	-	-	2005

Elements									
Designation	Element name	Mandatory/ Optional	Single/ Multiple	Explanation	Default value	Data type	Field length	Lang. specific	l.chg. in ver.
Reference to a value	**VALUE_IDREF**	Mandatory	Single	Reference to the unique identifier of a value. The reference must point to a value defined in the document (element **ALLOWED_VALUE** identified by **ALLOWED_VALUE_ID**).	-	**dtSTRING**	60	-	2005fd

Copyright © 2022 BME e.V. - BMEcat® Version 2005.2
Copyright © 2010-2021 BME e.V. - BMEcat® Version 2005.1
Copyright © 2005-2009 BME e.V. - BMEcat® Version 2005
Copyright © 1998–2004 Fraunhofer IAO, Stuttgart; Universität Essen BLI - BMEcat® Version 1.2

Elements									
Designation	Element name	Mandatory/ Optional	Single/ Multiple	Explanation	Default value	Data type	Field length	Lang. specific	l.chg. in ver.
				This element can only be used for defining features of a classification system; it can not be used for defining features directly for products (**PRODUCT_FEATURES**) or for configurations (**CONFIG_FEATURE**). 2005fd: New element					
Atomic value	**VALUE_SIMPLE**	Mandatory	Single	A single, atomic value 2005fd: New element	-	**dtSTRING**	80	-	2005fd
Text value	**VALUE_TEXT**	Mandatory	Single	This element contains a text. 2005fd: New element	-	**dtMLSTRING**	80	Yes	2005fd
Interval of values	**VALUE_RANGE**	Mandatory	Single	Definition of an interval of values 	-	-	-	-	2005fd
Additional multimedia information	**MIME_INFO**	Optional	Single	Information about multimedia files	-	-	-	-	-
Configuration information	**CONFIG_INFO**	Optional	Single	Information on creating order numbers and prices if the enumerative value is subject of product configuration. 	-	-	-	-	2005fd
Value order	**VALUE_ORDER**	Optional	Single	The order determines how a list of values is presented in target systems, beginning with the lowest number. 2005fd: New element	-	**dtINTEGER**	-	-	2005fd
Default flag	**DEFAULT_FLAG**	Optional	Single	Sets the default value of a list of values 2005fd: New element	-	**dtBOOLEAN**	-	-	2005fd

Copyright © 2022 BME e.V. - BMEcat® Version 2005.2
Copyright © 2010-2021 BME e.V. - BMEcat® Version 2005.1
Copyright © 2005-2009 BME e.V. - BMEcat® Version 2005
Copyright © 1998–2004 Fraunhofer IAO, Stuttgart; Universität Essen BLI - BMEcat® Version 1.2

VALUE_RANGE

(Interval of values)

This element defines an interval of values.

2005fd: New element

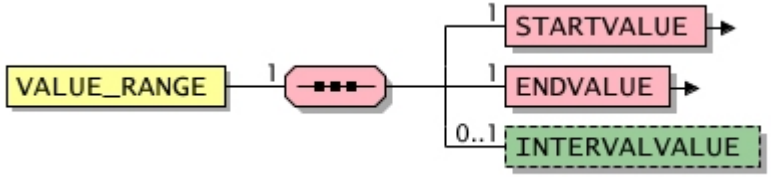

General					
Used in	Default value	Data type	Field length	Lang. specific	I.chg. in ver.
FT_VALUE	-	-	-	-	2005fd

Elements									
Designation	Element name	Mandatory/ Optional	Single/ Multiple	Explanation	Default value	Data type	Field length	Lang. specific	I.chg. in ver.
Start value	**STARTVALUE** **- intervaltype**	Mandatory	Single	Start value of the interval; the value is part of the interval.	-	**dtNUMBER**	-	-	2005fd
End value	**ENDVALUE** **- intervaltype**	Mandatory	Single	End value of the interval; the value is part of the interval.	-	**dtNUMBER**	-	-	2005fd
Distance of values	**INTERVALVALUE**	Optional	Single	Distance between the values in an interval of discrete values. For instance, a domain for the values 110, 120, 130, … 220 can be defined by setting the start and end values (110 and 120) and adding the distance (10). 2005fd: New element	-	**dtNUMBER**	-	-	2005fd

Copyright © 2022 BME e.V. - BMEcat® Version 2005.2
Copyright © 2010-2021 BME e.V. - BMEcat® Version 2005.1
Copyright © 2005-2009 BME e.V. - BMEcat® Version 2005
Copyright © 1998–2004 Fraunhofer IAO, Stuttgart; Universität Essen BLI - BMEcat® Version 1.2

STARTVALUE

(Start value)

This element sets the start value of the interval, thus the lower bound that is part of the interval.

2005fd: New element

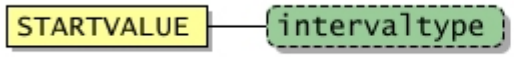

General					
Used in	Default value	Data type	Field length	Lang. specific	l.chg. in ver.
VALUE_RANGE	-	**dtNUMBER**	-	-	2005fd

Attributes								
Designation	Attribute name	Mandatory/ optional	Explanation	Default value	Data type	Field length	Lang. specific	l.chg. in ver.
Interval type	intervaltype	Optional	This attribute indicates whether the value is part of the domain or not See also: **Permitted values for attribute "intervaltype"**	include	**dtSTRING**	20	-	2005fd

Permitted values for attribute "intervaltype"			
Designation	Attribute value	Explanation	l.chg. in ver.
Value excluded	exclude	Indicates that the value is not part of the domain	2005fd
Value included	**include**	Indicates that the value is part of the domain	2005fd

Copyright © 2022 BME e.V. - BMEcat® Version 2005.2
Copyright © 2010-2021 BME e.V. - BMEcat® Version 2005.1
Copyright © 2005-2009 BME e.V. - BMEcat® Version 2005
Copyright © 1998–2004 Fraunhofer IAO, Stuttgart; Universität Essen BLI - BMEcat® Version 1.2

ENDVALUE

(End value)

This element sets the end value of the interval, thus the upper bound that is part of the interval.

2005fd: New element

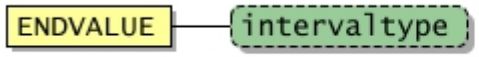

General					
Used in	Default value	Data type	Field length	Lang. specific	l.chg. in ver.
VALUE_RANGE	-	**dtNUMBER**	-	-	2005fd

Attributes								
Designation	Attribute name	Mandatory/ optional	Explanation	Default value	Data type	Field length	Lang. specific	l.chg. in ver.
Interval type	intervaltype	Optional	This attribute indicates whether the value is part of the domain or not See also: **Permitted values for attribute "intervaltype"**	include	**dtSTRING**	20	-	2005fd

Permitted values for attribute "intervaltype"			
Designation	Attribute value	Explanation	l.chg. in ver.
Value excluded	exclude	Indicates that the value is not part of the domain	2005fd
Value included	**include**	Indicates that the value is part of the domain	2005fd

Copyright © 2022 BME e.V. - BMEcat® Version 2005.2
Copyright © 2010-2021 BME e.V. - BMEcat® Version 2005.1
Copyright © 2005-2009 BME e.V. - BMEcat® Version 2005
Copyright © 1998–2004 Fraunhofer IAO, Stuttgart; Universität Essen BLI - BMEcat® Version 1.2

CONFIG_INFO

(Configuration information)

This element contains information on creating order numbers and prices if the enumerative value is subject of product configuration.

2005fd: New element

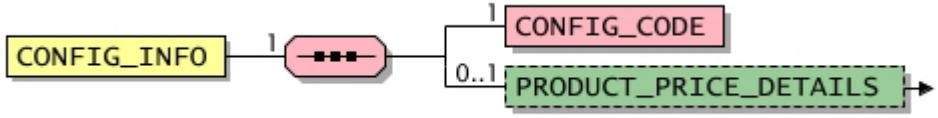

General					
Used in	Default value	Data type	Field length	Lang. specific	l.chg. in ver.
FT_VALUE	-	-	-	-	2005fd

Elements									
Designation	Element name	Mandatory/ Optional	Single/ Multiple	Explanation	Default value	Data type	Field length	Lang. specific	l.chg. in ver.
Order number extension	**CONFIG_CODE**	Mandatory	Single	In order to generate the order number of configurated products, this element can be used for coding the result of each configuration step; the unique code is added to the base order number. By adding these codes for each configuration step a unique order number is created. If the configuration requires more than one configuration step, it should be guaranted that the extensions can be separated. A solution is to standardize the length of each added code; for instance, adding 3 characters, e.g., "003"="black". Another solution is to separate the codes by a hyphen (e.g., "-red"). 2005fd: New element	-	**dtSTRING**	50	-	2005fd
Price details	**PRODUCT_PRICE_ DETAILS**	Optional	Single	Price information for the product	-	-	-	-	2005fd

Copyright © 2022 BME e.V. - BMEcat® Version 2005.2
Copyright © 2010-2021 BME e.V. - BMEcat® Version 2005.1
Copyright © 2005-2009 BME e.V. - BMEcat® Version 2005
Copyright © 1998–2004 Fraunhofer IAO, Stuttgart; Universität Essen BLI - BMEcat® Version 1.2

PRODUCT_PRICE_DETAILS

(Price details)

This element transfers price information for a product. It is possible to specify more than one price for each product. Doing so, the validity of the price has to be specified (e.g., time-based, geographic, technical). Moreover, graduated prices, discounts and dynamic prices can be defined.

2005fd: This new element replaces with a modified semantics the **ARTICLE_PRICE_DETAILS** element; it has been extended by the following sub-elements: **VALID_START_DATE**, **VALID_END_DATE**

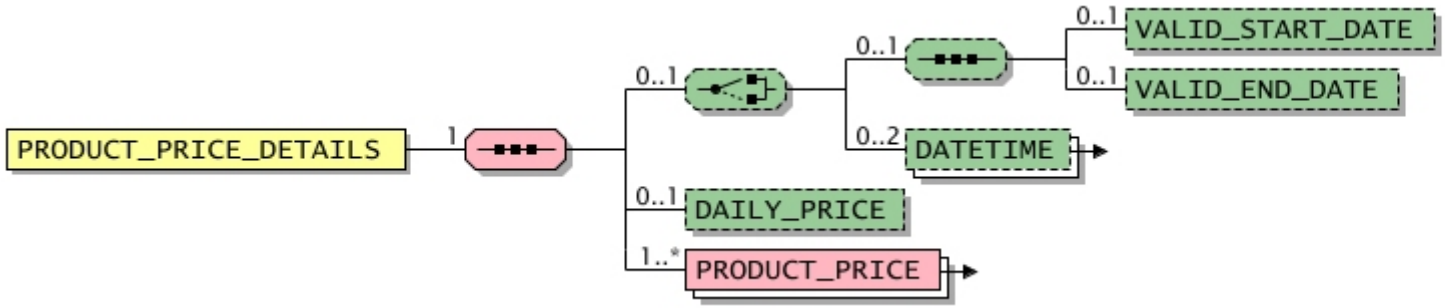

General					
Used in	Default value	Data type	Field length	Lang. specific	l.chg. in ver.
CONFIG_INFO, **CONFIG_STEP**, **PART_ALTERNATIVE**, **PREDEFINED_CONFIG**, **PRODUCT** in context T_NEW_CATALOG, **PRODUCT** in context T_UPDATE_PRICES, **PRODUCT** in context T_UPDATE_PRODUCTS	-	-	-	-	2005fd

Elements									
Designation	Element name	Mandatory/ Optional	Single/ Multiple	Explanation	Default value	Data type	Field length	Lang. specific	l.chg. in ver.
Valid start date	**VALID_START_DATE**	Optional	Single	Dates for the beginning of the period of validity 2005fd: This new element replaces with a modified semantics the **DATETIME** in the context of PRODUCT_PRICE_DETAILS element and its attribute type='valid_start_date'.	-	**dtDATETIME**	-	-	2005fd
Valid end date	**VALID_END_DATE**	Optional	Single	Date for the end of the period of validity	-	**dtDATETIME**	-	-	2005fd

Copyright © 2022 BME e.V. - BMEcat® Version 2005.2
Copyright © 2010-2021 BME e.V. - BMEcat® Version 2005.1
Copyright © 2005-2009 BME e.V. - BMEcat® Version 2005
Copyright © 1998–2004 Fraunhofer IAO, Stuttgart; Universität Essen BLI - BMEcat® Version 1.2

Elements									
Designation	Element name	Mandatory/ Optional	Single/ Multiple	Explanation	Default value	Data type	Field length	Lang. specific	l.chg. in ver.
				2005fd: This new element replaces with a modified semantics the **DATETIME** in the context of PRODUCT_PRICE_DETAILS element and its attribute type='valid_end_date'.					
	DATETIME in the context of ARTICLE_PRICE_DETAILS **- type**	Optional	Multiple (2)		-	-	-	-	-
Daily price	**DAILY_PRICE**	Optional	Single	If the value of this field is “true”, the product prices may be subject to considerable daily fluctuations (e.g., additional charges for metals) and must therefore be seen as recommended prices only. The exact prices must then be calculated either using an external system or manually (e.g., by contacting the supplier). If nothing is specified in this field or if “false” is specified, the prices are assumed to be fixed.	-	**dtBOOLEAN**	-	-	-
Product price	**PRODUCT_PRICE** **- price_type**	Mandatory	Multiple	Definition of a price for the product	-	-	-	-	2005

Example 1

In the example 1 prices are specified for the two periods 2005-01-01 to 2005-06-30 and 2005-07-01 to 2005-12-31. For each period there is both a net customer price and a net list price specified for each product. The prices are only valid for Germany and the Netherlands.

```
<PRODUCT_PRICE_DETAILS>
    <VALID_START_DATE>2005-01-01</VALID_START_DATE>
    <VALID_END_DATE>2005-06-30</VALID_END_DATE>
    <PRODUCT_PRICE price_type="net_customer">
        <PRICE_AMOUNT>2.99</PRICE_AMOUNT>
        <PRICE_CURRENCY>EUR</PRICE_CURRENCY>
        <TAX>0.16</TAX>
        <PRICE_FACTOR>0.8</PRICE_FACTOR>
        <LOWER_BOUND>1</LOWER_BOUND>
        <TERRITORY>DE</TERRITORY>
        <TERRITORY>NL</TERRITORY>
    </PRODUCT_PRICE>
</PRODUCT_PRICE_DETAILS>
<PRODUCT_PRICE_DETAILS>
    <VALID_START_DATE>2005-07-01</VALID_START_DATE>
    <VALID_END_DATE>2005-12-31</VALID_END_DATE>
    <PRODUCT_PRICE price_type="net_customer">
        <PRICE_AMOUNT>3.09</PRICE_AMOUNT>
```

Copyright © 2022 BME e.V. - BMEcat® Version 2005.2
Copyright © 2010-2021 BME e.V. - BMEcat® Version 2005.1
Copyright © 2005-2009 BME e.V. - BMEcat® Version 2005
Copyright © 1998–2004 Fraunhofer IAO, Stuttgart; Universität Essen BLI - BMEcat® Version 1.2

```
        <PRICE_CURRENCY>EUR</PRICE_CURRENCY>
        <TAX>0.16</TAX>
        <PRICE_FACTOR>0.8</PRICE_FACTOR>
        <LOWER_BOUND>1</LOWER_BOUND>
        <TERRITORY>DE</TERRITORY>
        <TERRITORY>NL</TERRITORY>
    </PRODUCT_PRICE>
</PRODUCT_PRICE_DETAILS>
```

Example 2
The second example represents a product that has not a fix price, but a dynamic price, thus the actual price is calculated on the basis of a price formula.

The example consists of three parts: The formula is defined in the global formula dictionary, see XML code in the **Example 2 for the FORMULA element**; the configuration is specified in the **Example 2 for the PRODUCT_CONFIG_DETAILS** element; the application of the price formula is shown below.

Instead of the element **PRICE_AMOUNT** the element **PRICE_FORMULA** is used here to reference to the formula which is specified in the global formula repository and to fill the parameters with product specific values.

All other subelements of **PRODUCT_PRICE** can be used analog to fix pricing. Especially the price factor (**PRICE_FACTOR**) is multiplied with the result of the calculated price formula to build the final price.

```
<PRODUCT_PRICE price_type="net_list">
    <PRICE_FORMULA>
        <FORMULA_IDREF>33</FORMULA_IDREF>
        <PARAMETERS>
            <PARAMETER>
                <PARAMETER_SYMBOLREF>PP</PARAMETER_SYMBOLREF>
                <PARAMETER_VALUE>300</PARAMETER_VALUE>
            </PARAMETER>
        </PARAMETERS>
    </PRICE_FORMULA>
    <PRICE_CURRENCY>EUR</PRICE_CURRENCY>
    <TAX>.16</TAX>
    <PRICE_FACTOR>0.65</PRICE_FACTOR>
</PRODUCT_PRICE>
```

Example 3
Another example for price formulas can be found in the section **Example: Metal surchage**.

Example 4
The next example defines a daily price, therefore the price amount can be specified in the catalog document.

```
<PRODUCT_PRICE_DETAILS>
    <DAILY_PRICE>TRUE</DAILY_PRICE>
    <PRODUCT_PRICE price_type="on_request"></PRODUCT_PRICE>
</PRODUCT_PRICE_DETAILS>
```

Copyright © 2022 BME e.V. - BMEcat® Version 2005.2
Copyright © 2010-2021 BME e.V. - BMEcat® Version 2005.1
Copyright © 2005-2009 BME e.V. - BMEcat® Version 2005
Copyright © 1998–2004 Fraunhofer IAO, Stuttgart; Universität Essen BLI - BMEcat® Version 1.2

Example 5
This example defines four quantity scale. The final quantity scale, beginning at 100,000 products, results in a price which has to be requested, thus is not fixed in the catalog document.

```
<PRODUCT_PRICE_DETAILS>
    <PRODUCT_PRICE price_type="net_list">
        <PRICE_AMOUNT>.10</PRICE_AMOUNT>
        <PRICE_CURRENCY>EUR</PRICE_CURRENCY>
        <TAX>.16</TAX>
        <PRICE_FACTOR>1</PRICE_FACTOR>
        <LOWER_BOUND>1000</LOWER_BOUND>
    </PRODUCT_PRICE>
    <PRODUCT_PRICE price_type="net_list">
        <PRICE_AMOUNT>.10</PRICE_AMOUNT>
        <PRICE_CURRENCY>EUR</PRICE_CURRENCY>
        <TAX>.16</TAX>
        <PRICE_FACTOR>.7</PRICE_FACTOR>
        <LOWER_BOUND>20000</LOWER_BOUND>
    </PRODUCT_PRICE>
    <PRODUCT_PRICE price_type="net_list">
        <PRICE_AMOUNT>.10</PRICE_AMOUNT>
        <PRICE_CURRENCY>EUR</PRICE_CURRENCY>
        <TAX>.16</TAX>
        <PRICE_FACTOR>.5</PRICE_FACTOR>
        <LOWER_BOUND>50000</LOWER_BOUND>
    </PRODUCT_PRICE>
    <PRODUCT_PRICE price_type="on_request">
        <PRICE_CURRENCY>EUR</PRICE_CURRENCY>
        <TAX>.16</TAX>
        <LOWER_BOUND>100000</LOWER_BOUND>
    </PRODUCT_PRICE>
</PRODUCT_PRICE_DETAILS>
```

Copyright © 2022 BME e.V. - BMEcat® Version 2005.2
Copyright © 2010-2021 BME e.V. - BMEcat® Version 2005.1
Copyright © 2005-2009 BME e.V. - BMEcat® Version 2005
Copyright © 1998–2004 Fraunhofer IAO, Stuttgart; Universität Essen BLI - BMEcat® Version 1.2

DATETIME in the context of ARTICLE_PRICE_DETAILS

()

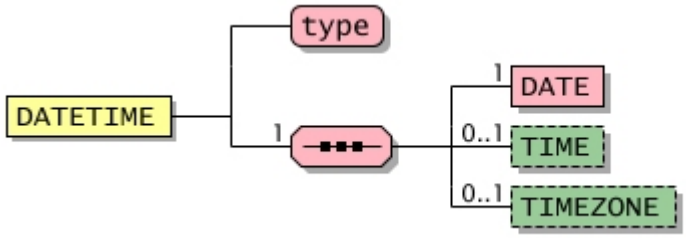

General					
Used in	Default value	Data type	Field length	Lang. specific	l.chg. in ver.
PRODUCT_PRICE_DETAILS	-	-	-	-	-

Attributes								
Designation	Attribute name	Mandatory/ optional	Explanation	Default value	Data type	Field length	Lang. specific	l.chg. in ver.
	type	Mandatory	See also: **Permitted values for attribute "type"**	-	**dtSTRING**	20	-	-

Permitted values for attribute "type"			
Designation	Attribute value	Explanation	l.chg. in ver.
	valid_start_date		-
	valid_end_date		-

Elements									
Designation	Element name	Mandatory/ Optional	Single/ Multiple	Explanation	Default value	Data type	Field length	Lang. specific	l.chg. in ver.
Date	**DATE**	Mandatory	Single	Date	-	**dtDATETYPE**	-	-	-
Time	**TIME**	Optional	Single	Element for time	-	**dtTIMETYPE**	-	-	-
Time zone	**TIMEZONE**	Optional	Single	Element for timezone	-	**dtTIMEZONETYPE**	-	-	-

Copyright © 2022 BME e.V. - BMEcat® Version 2005.2
Copyright © 2010-2021 BME e.V. - BMEcat® Version 2005.1
Copyright © 2005-2009 BME e.V. - BMEcat® Version 2005
Copyright © 1998–2004 Fraunhofer IAO, Stuttgart; Universität Essen BLI - BMEcat® Version 1.2

PRODUCT_PRICE

(Product price)

This element defines a price for the product.

2005fd: This new element replaces with a modified semantics the **ARTICLE_PRICE** element; it has been extended by the following sub-elements: **PRICE_FORMULA**, **AREA_REFS**, **PRICE_BASE**, **PRICE_FLAG**.
2005: This element has been extended by the sub-element **TAX_DETAILS**.

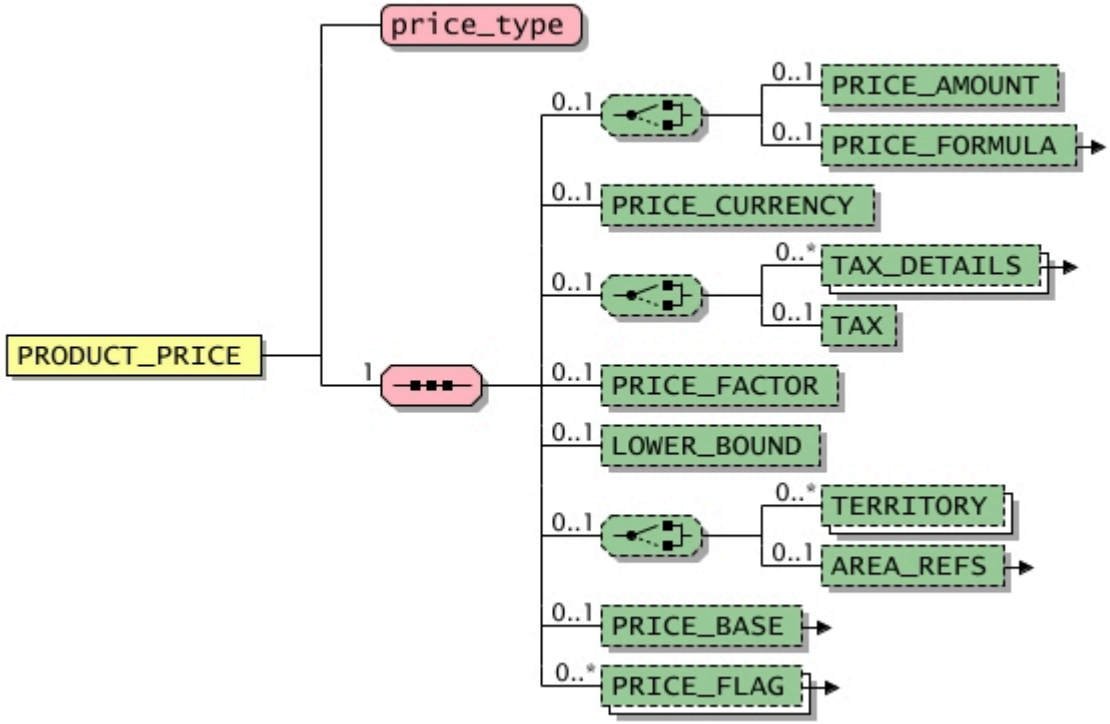

General					
Used in	Default value	Data type	Field length	Lang. specific	l.chg. in ver.
PRODUCT_PRICE_DETAILS	-	-	-	-	2005

Copyright © 2022 BME e.V. - BMEcat® Version 2005.2
Copyright © 2010-2021 BME e.V. - BMEcat® Version 2005.1
Copyright © 2005-2009 BME e.V. - BMEcat® Version 2005
Copyright © 1998–2004 Fraunhofer IAO, Stuttgart; Universität Essen BLI - BMEcat® Version 1.2

Attributes

Designation	Attribute name	Mandatory/ optional	Explanation	Default value	Data type	Field length	Lang. specific	l.chg. in ver.
Price type	price_type	Mandatory	Attribute which specifies the type of price. See also: **Predefined values for attribute "price_type"**	-	**dtSTRING**	20	-	-

Predefined values for attribute "price_type"

Designation	Attribute value	Explanation	l.chg. in ver.
List price	gros_list	(Purchasing) list price including sales tax	-
Customer price	net_customer	Customer-specific end price excluding sales tax	-
Price for express delivery	net_customer_exp	Customer-specific end price for express delivery excluding sales tax This price type is not clearly defined enough. If it is to be used regardless, the supplier and the customer must clarify the exact meaning of the price and fix it.	-
List price	net_list	(Purchasing) list price excluding sales tax	-
Nonbinding recommended price	nrp	Nonbinding recommended (retail) price	1.2_fd
Price on request	on_request	The price is not given and has to be requested.	2005fd
User-defined type	User defined value, format: udp_\w{1,16}	Any other user-defined prices with own price types are allowed to be transferred. These types must then have a type description beginning with "udp". User-defined types are likewise only allowed to be specified once per article. Example: udp_aircargo_price It is essential to clarify beforehand whether or not the target systems are able to process user-defined price types. Furthermore, the exact meaning of the prices must be clarified and fixed between the supplier and the customer.	-

Elements

Designation	Element name	Mandatory/ Optional	Single/ Multiple	Explanation	Default value	Data type	Field length	Lang. specific	l.chg. in ver.
Price amount	**PRICE_AMOUNT**	Optional	Single	Amount of the price	-	**dtNUMBER**	-	-	-
Price formula	**PRICE_FORMULA**	Optional	Single	Formel for price calculation 	-	-	-	-	2005fd
Price currency	**PRICE_CURRENCY**	Optional	Single	Currency of the price If nothing is specified in this field, the currency defined in the document header (**HEADER**) in the element **CURRENCY** is used for all prices.	-	**dtCURRENCIES**		-	-
Tax details	**TAX_DETAILS**	Optional	Multiple	Specification of one applicapable tax	-	-	-	-	2005

Copyright © 2022 BME e.V. - BMEcat® Version 2005.2
Copyright © 2010-2021 BME e.V. - BMEcat® Version 2005.1
Copyright © 2005-2009 BME e.V. - BMEcat® Version 2005
Copyright © 1998–2004 Fraunhofer IAO, Stuttgart; Universität Essen BLI - BMEcat® Version 1.2

Elements

Designation	Element name	Mandatory/ Optional	Single/ Multiple	Explanation	Default value	Data type	Field length	Lang. specific	l.chg. in ver.
Tax rate	**TAX**	Optional	Single	Factor for tax applicable to this price. Example: "0.16", corresponds to 16 percent.	-	**dtNUMBER**	-	-	-
Price factor	**PRICE_FACTOR**	Optional	Single	The (discount) factor always multiplied by the price specified in this element in order to determine the end price. 2005: A default value was added.	1	**dtNUMBER**	-	-	2005
Lower quantity limit	**LOWER_BOUND**	Optional	Single	Lower quantity limit for graduated prices. The unit for the graduated price limit is the order unit (**ORDER_UNIT**). Note: the upper graduated price limit is determined by the **LOWER_BOUND** value of the next price. If there are no more graduations, the price applies to all quantities which are higher than the lower graduated price limit.	-	**dtNUMBER**	-	-	-
Territory	**TERRITORY**	Optional	Multiple	Territory (i.e. country, state, region) coded according to ISO 3166	-	**dtCOUNTRIES**	-	-	1.2_fd
Area references	**AREA_REFS**	Optional	Single	List of references to areas 	-	-	-	-	2005fd
Price basis	**PRICE_BASE**	Optional	Single	Contains the price basis consisting of price unit and price factor, it defines the basis of a price. 	-	-	-	-	2005fd
Price flag	**PRICE_FLAG** **- type**	Optional	Multiple	Base of a price (e.g. with/without freight)	-	**dtBOOLEAN**	-	-	-

Example 1
In the example a net customer price is specified in Euro and valid for Germany and the Netherlands.

```
<ARTICLE_PRICE price_type="net_customer">
    <PRICE_AMOUNT>1.04</PRICE_AMOUNT>
    <PRICE_CURRENCY>EUR</PRICE_CURRENCY>
    <TAX>0.16</TAX>
    <PRICE_FACTOR>0.8</PRICE_FACTOR>
    <LOWER_BOUND>1</LOWER_BOUND>
    <TERRITORY>DE</TERRITORY>
    <TERRITORY>NL</TERRITORY>
</ARTICLE_PRICE>
```

Copyright © 2022 BME e.V. - BMEcat® Version 2005.2
Copyright © 2010-2021 BME e.V. - BMEcat® Version 2005.1
Copyright © 2005-2009 BME e.V. - BMEcat® Version 2005
Copyright © 1998–2004 Fraunhofer IAO, Stuttgart; Universität Essen BLI - BMEcat® Version 1.2

Example 2
Refer also to the examples in the element **PRODUCT_PRICE_DETAILS**.

Copyright © 2022 BME e.V. - BMEcat® Version 2005.2
Copyright © 2010-2021 BME e.V. - BMEcat® Version 2005.1
Copyright © 2005-2009 BME e.V. - BMEcat® Version 2005
Copyright © 1998–2004 Fraunhofer IAO, Stuttgart; Universität Essen BLI - BMEcat® Version 1.2

PRICE_FORMULA

(Price formula)

This element defines a formula for price calculation based on parameters.

2005fd: New element

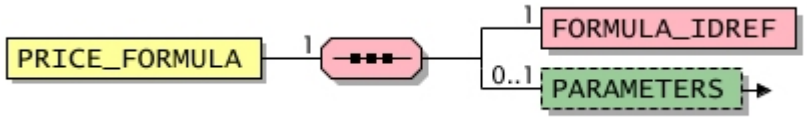

General					
Used in	Default value	Data type	Field length	Lang. specific	l.chg. in ver.
ARTICLE_PRICE, **PRODUCT_PRICE**	-	-	-	-	2005fd

Elements

Designation	Element name	Mandatory/ Optional	Single/ Multiple	Explanation	Default value	Data type	Field length	Lang. specific	l.chg. in ver.
Reference to a formula	**FORMULA_IDREF**	Mandatory	Single	Reference to the unique identifier of a formula. The reference must point to a formula defined in the document (**FORMULA** element identified by **FORMULA_ID**). 2005fd: New element	-	**dtSTRING**	60	-	2005fd
Paramters	**PARAMETERS**	Optional	Single	List of paramters which are used in a price formula	-	-	-	-	2005fd

Example

Refer also to the examples in the **PRODUCT_PRICE_DETAILS** element .

Copyright © 2022 BME e.V. - BMEcat® Version 2005.2
Copyright © 2010-2021 BME e.V. - BMEcat® Version 2005.1
Copyright © 2005-2009 BME e.V. - BMEcat® Version 2005
Copyright © 1998–2004 Fraunhofer IAO, Stuttgart; Universität Essen BLI - BMEcat® Version 1.2

PARAMETERS

(Paramters)

This element contains a list of parameters, which can be used in formulas.

2005fd: New element

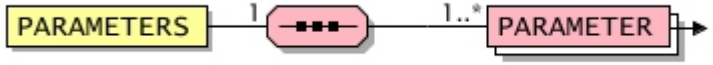

General					
Used in	Default value	Data type	Field length	Lang. specific	l.chg. in ver.
CONFIG_FORMULA, **PRICE_FORMULA**	-	-	-	-	2005fd

Elements									
Designation	Element name	Mandatory/ Optional	Single/ Multiple	Explanation	Default value	Data type	Field length	Lang. specific	l.chg. in ver.
Parameter	**PARAMETER**	Mandatory	Multiple	Used on the product level to set the value of a parameter. If the parameter has a default value, then this value is replaced by the new one.	-	-	-	-	2005fd

Copyright © 2022 BME e.V. - BMEcat® Version 2005.2
Copyright © 2010-2021 BME e.V. - BMEcat® Version 2005.1
Copyright © 2005-2009 BME e.V. - BMEcat® Version 2005
Copyright © 1998–2004 Fraunhofer IAO, Stuttgart; Universität Essen BLI - BMEcat® Version 1.2

PARAMETER

(Parameter)

This element is used on the product level to set the value of a parameter. If the parameter has a default value, then this value is replaced by the new one.

2005fd: New element

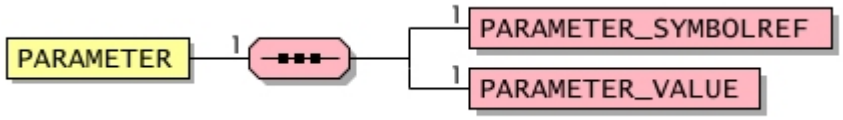

General					
Used in	Default value	Data type	Field length	Lang. specific	l.chg. in ver.
PARAMETERS	-	-	-	-	2005fd

Elements									
Designation	Element name	Mandatory/ Optional	Single/ Multiple	Explanation	Default value	Data type	Field length	Lang. specific	l.chg. in ver.
Reference to a parameter	**PARAMETER_ SYMBOLREF**	Mandatory	Single	Reference to the unique identifier of a parameter. The reference must point to a parameter defined in the document (**PARAMETER_DEFINITION** element identified by **PARAMETER_SYMBOL**). 2005fd: New element	-	**dtSTRING**	60	-	2005fd
Parameter value	**PARAMETER_VALUE**	Mandatory	Single	This element contains the value of the parameter. If the **PARAMETER_DEFAULT_ VALUE** element has been used for setting a default value, this value is replaced by the new one. 2005fd: New element	-	**dtSTRING**	250	-	2005fd

Copyright © 2022 BME e.V. - BMEcat® Version 2005.2
Copyright © 2010-2021 BME e.V. - BMEcat® Version 2005.1
Copyright © 2005-2009 BME e.V. - BMEcat® Version 2005
Copyright © 1998–2004 Fraunhofer IAO, Stuttgart; Universität Essen BLI - BMEcat® Version 1.2

TAX_DETAILS

(Tax details)

This element contains information of one applicable tax.

2005: New element

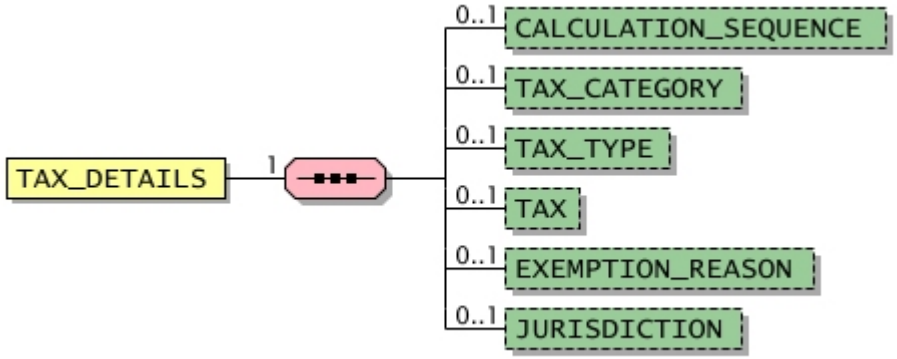

General					
Used in	Default value	Data type	Field length	Lang. specific	l.chg. in ver.
ARTICLE_PRICE, **PRODUCT_PRICE**	-	-	-	-	2005

Elements									
Designation	Element name	Mandatory/ Optional	Single/ Multiple	Explanation	Default value	Data type	Field length	Lang. specific	l.chg. in ver.
Calculation sequence	**CALCULATION_ SEQUENCE**	Optional	Single	This element determines the sequence for applying multiple taxes to a basis. The taxes must be applied beginning with the lowest value in **CALCULATION_SEQUENCE**. Therefore, the tax with the lowest sequence will be calculated first, then follows the tax with the next higher sequence, and so on. If two taxes have the same sequence, both tax factors must be added prior to calculation. 2005: New element	1	**dtCOUNT**	-	-	2005
Tax category	**TAX_CATEGORY**	Optional	Single	This element specifies the tax category as a code. By this it is possible to define the tax not as an absolute value, but as the currently valid percentage (**TAX**). The	-	**dtSTRING**	80	-	2005

Copyright © 2022 BME e.V. - BMEcat® Version 2005.2
Copyright © 2010-2021 BME e.V. - BMEcat® Version 2005.1
Copyright © 2005-2009 BME e.V. - BMEcat® Version 2005
Copyright © 1998–2004 Fraunhofer IAO, Stuttgart; Universität Essen BLI - BMEcat® Version 1.2

Elements

Designation	Element name	Mandatory/ Optional	Single/ Multiple	Explanation	Default value	Data type	Field length	Lang. specific	l.chg. in ver.
				specification should take place, if possible, by using a common code. The list of predefined values contains codes that should be used within the European Union (see also **http://europa.eu.int/comm/taxation_customs/taxation/vat/how_vat_works/rates/index_en.htm**). 2005: New element See also: **Predefined values for element TAX_CATEGORY**					
Tax type	**TAX_TYPE**	Optional	Single	This element specifies the tax type; it should take place by using internationally accepted terms, such as VAT for value added tax. 2005: New element	vat	**dtSTRING**	250	-	2005
Tax rate	**TAX**	Optional	Single	Factor for tax applicable to this price. Example: "0.16", corresponds to 16 percent.	-	**dtNUMBER**	-	-	-
Exemption reason	**EXEMPTION_REASON**	Optional	Single	This element gives the reason why the tax is an exemption from the norm. 2005: New element	-	**dtMLSTRING**	250	Yes	2005
Jurisdiction	**JURISDICTION**	Optional	Single	Tax jurisdiction 2005: New element	-	**dtMLSTRING**	250	Yes	2005

Predefined values for element TAX_CATEGORY

Designation	Element value	Explanation	l.chg. in ver.
Exemption	exemption	The item is free of tax.	2005
Parking rate	parking_rate	The tax is a parking rate.	2005
Reduced rate	reduced_rate	The tax is a reduced rate.	2005
Standard rate	standard_rate	The tax is the standard rate.	2005
Super reduced rate	super_reduced_rate	The tax is a super reduced rate.	2005
Zero rate	zero_rate	The tax is the zero rate.	2005
Other, user-defined category	User defined value, format: [\w\-\.]{1,80}	The specification of the tax category should take place by commonly used codes. The code should have at least 1 character and 80 characters at the maximum.	2005

Copyright © 2022 BME e.V. - BMEcat® Version 2005.2
Copyright © 2010-2021 BME e.V. - BMEcat® Version 2005.1
Copyright © 2005-2009 BME e.V. - BMEcat® Version 2005
Copyright © 1998–2004 Fraunhofer IAO, Stuttgart; Universität Essen BLI - BMEcat® Version 1.2

PRICE_BASE

(Price basis)

This element contains the price basis consisting of price unit and price factor, it defines the basis of a price.

2005fd: New element

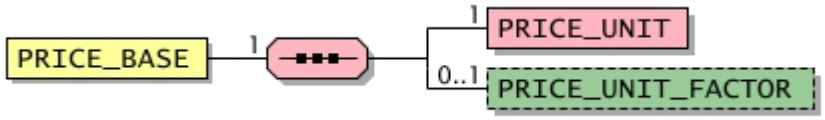

General					
Used in	Default value	Data type	Field length	Lang. specific	l.chg. in ver.
ARTICLE_PRICE, **PRODUCT_PRICE**	-	-	-	-	2005fd

Elements									
Designation	Element name	Mandatory/ Optional	Single/ Multiple	Explanation	Default value	Data type	Field length	Lang. specific	l.chg. in ver.
Price unit	**PRICE_UNIT**	Mandatory	Single	Unit of measurement on which the price is calculated 2005fd: New element	-	**dtPUNIT**	-	-	2005fd
Price unit factor	**PRICE_UNIT_FACTOR**	Optional	Single	The price factor is the conversion factor for price unit and order unit. The underlying formula is: PRICE_UNIT equals **PRICE_UNIT_FACTOR** * **ORDER_UNIT** 2005fd: New element 2005: A default value was added.	1	**dtFLOAT**	-	-	2005

Copyright © 2022 BME e.V. - BMEcat® Version 2005.2
Copyright © 2010-2021 BME e.V. - BMEcat® Version 2005.1
Copyright © 2005-2009 BME e.V. - BMEcat® Version 2005
Copyright © 1998–2004 Fraunhofer IAO, Stuttgart; Universität Essen BLI - BMEcat® Version 1.2

FT_SYNONYMS

(Feature synonyms)

This element contains a list of synonyms for the feature name.

2005fd: New element

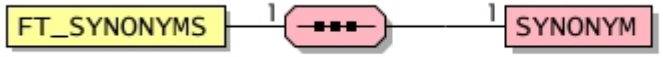

General					
Used in	Default value	Data type	Field length	Lang. specific	l.chg. in ver.
CLASSIFICATION_GROUP_FEATURE_TEMPLATE, **FEATURE_CONTENT**	-	-	-	-	2005fd

Elements

Designation	Element name	Mandatory/ Optional	Single/ Multiple	Explanation	Default value	Data type	Field length	Lang. specific	l.chg. in ver.
Synonym	**SYNONYM**	Mandatory	Single	The synonym support name-based product search. 2005fd: The maximum length has been extended from 60 characters to 80 characters.	-	**dtMLSTRING**	80	Yes	2005fd

Copyright © 2022 BME e.V. - BMEcat® Version 2005.2
Copyright © 2010-2021 BME e.V. - BMEcat® Version 2005.1
Copyright © 2005-2009 BME e.V. - BMEcat® Version 2005
Copyright © 1998–2004 Fraunhofer IAO, Stuttgart; Universität Essen BLI - BMEcat® Version 1.2

FT_SOURCE

(Feature source)

This element contains the source for the feature definition which has been given in the **FT_DESCR** element; e.g. a reference to a document, standard or definition describing the feature.

2005fd: New element
2005: The sub-element **SOURCE_DESCR** was renamed to **SOURCE_NAME**.

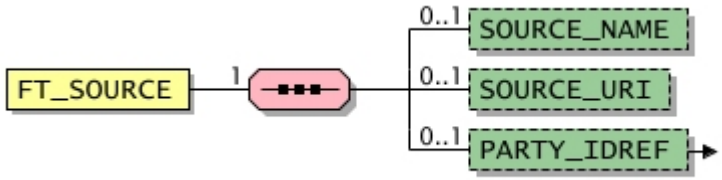

General					
Used in	Default value	Data type	Field length	Lang. specific	l.chg. in ver.
CLASSIFICATION_GROUP_FEATURE_TEMPLATE, **FEATURE_CONTENT**	-	-	-	-	2005

Elements

Designation	Element name	Mandatory/ Optional	Single/ Multiple	Explanation	Default value	Data type	Field length	Lang. specific	l.chg. in ver.
Source description	**SOURCE_NAME**	Optional	Single	Description of the source, e.g., the name of the document or standard 2005fd: New element 2005: This element was named **SOURCE_DESCR** in Version 2005 final draft, now it is named **SOURCE_NAME**. The maximum length has been reduced from 250 characters to 80 characters.	-	**dtMLSTRING**	80	Yes	2005
URI of the source	**SOURCE_URI**	Optional	Single	URI of the source, e.g., pointing to the document or standard 2005fd: New element	-	**dtSTRING**	255	-	2005fd
Reference to a business partner	**PARTY_IDREF - type**	Optional	Single	Reference to a business partner. It contains the unique identifier (**PARTY_ID**) of the respective party (element **PARTY**).	-	**dtSTRING**	250	-	2005fd

Copyright © 2022 BME e.V. - BMEcat® Version 2005.2
Copyright © 2010-2021 BME e.V. - BMEcat® Version 2005.1
Copyright © 2005-2009 BME e.V. - BMEcat® Version 2005
Copyright © 1998–2004 Fraunhofer IAO, Stuttgart; Universität Essen BLI - BMEcat® Version 1.2

Elements									
Designation	Element name	Mandatory/ Optional	Single/ Multiple	Explanation	Default value	Data type	Field length	Lang. specific	I.chg. in ver.

Copyright © 2022 BME e.V. - BMEcat® Version 2005.2
Copyright © 2010-2021 BME e.V. - BMEcat® Version 2005.1
Copyright © 2005-2009 BME e.V. - BMEcat® Version 2005
Copyright © 1998–2004 Fraunhofer IAO, Stuttgart; Universität Essen BLI - BMEcat® Version 1.2

CLASSIFICATION_GROUPS

(Classification groups)

This element contains all groups of the classification system and - if available - all feature lists.

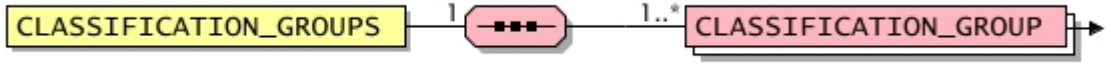

General					
Used in	Default value	Data type	Field length	Lang. specific	l.chg. in ver.
CLASSIFICATION_SYSTEM	-	-	-	-	-

Elements									
Designation	Element name	Mandatory/ Optional	Single/ Multiple	Explanation	Default value	Data type	Field length	Lang. specific	l.chg. in ver.
Classification group	**CLASSIFICATION_ GROUP** **- type** **- level**	Mandatory	Multiple	Defines a group of the classification system	-	-	-	-	2005

Example

```
<CLASSIFICATION_GROUPS>
     ...
    <CLASSIFICATION_GROUP level="2" type="leaf">
        <CLASSIFICATION_GROUP_ID>1458</CLASSIFICATION_GROUP_ID>
        <CLASSIFICATION_GROUP_NAME>Shaver</CLASSIFICATION_GROUP_NAME>
        <CLASSIFICATION_GROUP_SYNONYMS>
            <SYNONYM>Men’s shaver</SYNONYM>
            <SYNONYM>Electric shaver</SYNONYM>
            <SYNONYM>Lady Style shaver</SYNONYM>
            <SYNONYM>Wet / dry shaver</SYNONYM>
            <SYNONYM>Battery / electric shaver</SYNONYM>
            <SYNONYM>Vario-shaver</SYNONYM>
            <SYNONYM>Ladies’shaver</SYNONYM>
            <SYNONYM>Shaver</SYNONYM>
            <SYNONYM>Ladyshave</SYNONYM>
            <SYNONYM>Dry shaver</SYNONYM>
        </CLASSIFICATION_GROUP_SYNONYMS>
        <CLASSIFICATION_GROUP_FEATURE_TEMPLATES>
```

Copyright © 2022 BME e.V. - BMEcat® Version 2005.2
Copyright © 2010-2021 BME e.V. - BMEcat® Version 2005.1
Copyright © 2005-2009 BME e.V. - BMEcat® Version 2005
Copyright © 1998–2004 Fraunhofer IAO, Stuttgart; Universität Essen BLI - BMEcat® Version 1.2

```
            <CLASSIFICATION_GROUP_FEATURE_TEMPLATE>
                <FT_IDREF>13</FT_IDREF>
                <FT_MANDATORY>true</FT_MANDATORY>
                <FT_DATATYPE>alphanumeric</FT_DATATYPE>
                <FT_ORDER>5</FT_ORDER>
                <FT_ALLOWED_VALUES>
                    <ALLOWED_VALUE_IDREF order="1">16020</ALLOWED_VALUE_IDREF>
                    <ALLOWED_VALUE_IDREF order="2">51315</ALLOWED_VALUE_IDREF>
                    <ALLOWED_VALUE_IDREF order="3">6917</ALLOWED_VALUE_IDREF>
                    <ALLOWED_VALUE_IDREF order="4">6921</ALLOWED_VALUE_IDREF>
                    <ALLOWED_VALUE_IDREF order="5">6922</ALLOWED_VALUE_IDREF>
                </FT_ALLOWED_VALUES>
            </CLASSIFICATION_GROUP_FEATURE_TEMPLATE>
            <CLASSIFICATION_GROUP_FEATURE_TEMPLATE>
                <FT_IDREF>1625</FT_IDREF>
                <FT_MANDATORY>true</FT_MANDATORY>
                <FT_DATATYPE>integer</FT_DATATYPE>
                <FT_UNIT>C62</FT_UNIT>
                <FT_ORDER>15</FT_ORDER>
            </CLASSIFICATION_GROUP_FEATURE_TEMPLATE>
        </CLASSIFICATION_GROUP_FEATURE_TEMPLATES>
        <CLASSIFICATION_GROUP_PARENT_ID>112</CLASSIFICATION_GROUP_PARENT_ID>
    </CLASSIFICATION_GROUP>
     ...
</CLASSIFICATION_GROUPS>
```

Copyright © 2022 BME e.V. - BMEcat® Version 2005.2
Copyright © 2010-2021 BME e.V. - BMEcat® Version 2005.1
Copyright © 2005-2009 BME e.V. - BMEcat® Version 2005
Copyright © 1998–2004 Fraunhofer IAO, Stuttgart; Universität Essen BLI - BMEcat® Version 1.2

CLASSIFICATION_GROUP

(Classification group)

This element defines a group of the classification system.

2005fd: The element was revised and the following sub-elements were added **CLASSIFICATION_GROUP_ID2**, **CLASSIFICATION_GROUP_VERSION**, **CLASSIFICATION_GROUP_SHORTNAME**, **CLASSIFICATION_GROUP_SOURCE**, **CLASSIFICATION_GROUP_NOTE**, **CLASSIFICATION_GROUP_REMARK**, **CLASSIFICATION_GROUP_CONTACTS**, **CLASSIFICATION_GROUP_ORDER**, **MIME_INFO**, **CLASSIFICATION_GROUP_UDX**
2005: The attribute '**type**' is now optional.

Copyright © 2022 BME e.V. - BMEcat® Version 2005.2
Copyright © 2010-2021 BME e.V. - BMEcat® Version 2005.1
Copyright © 2005-2009 BME e.V. - BMEcat® Version 2005
Copyright © 1998–2004 Fraunhofer IAO, Stuttgart; Universität Essen BLI - BMEcat® Version 1.2

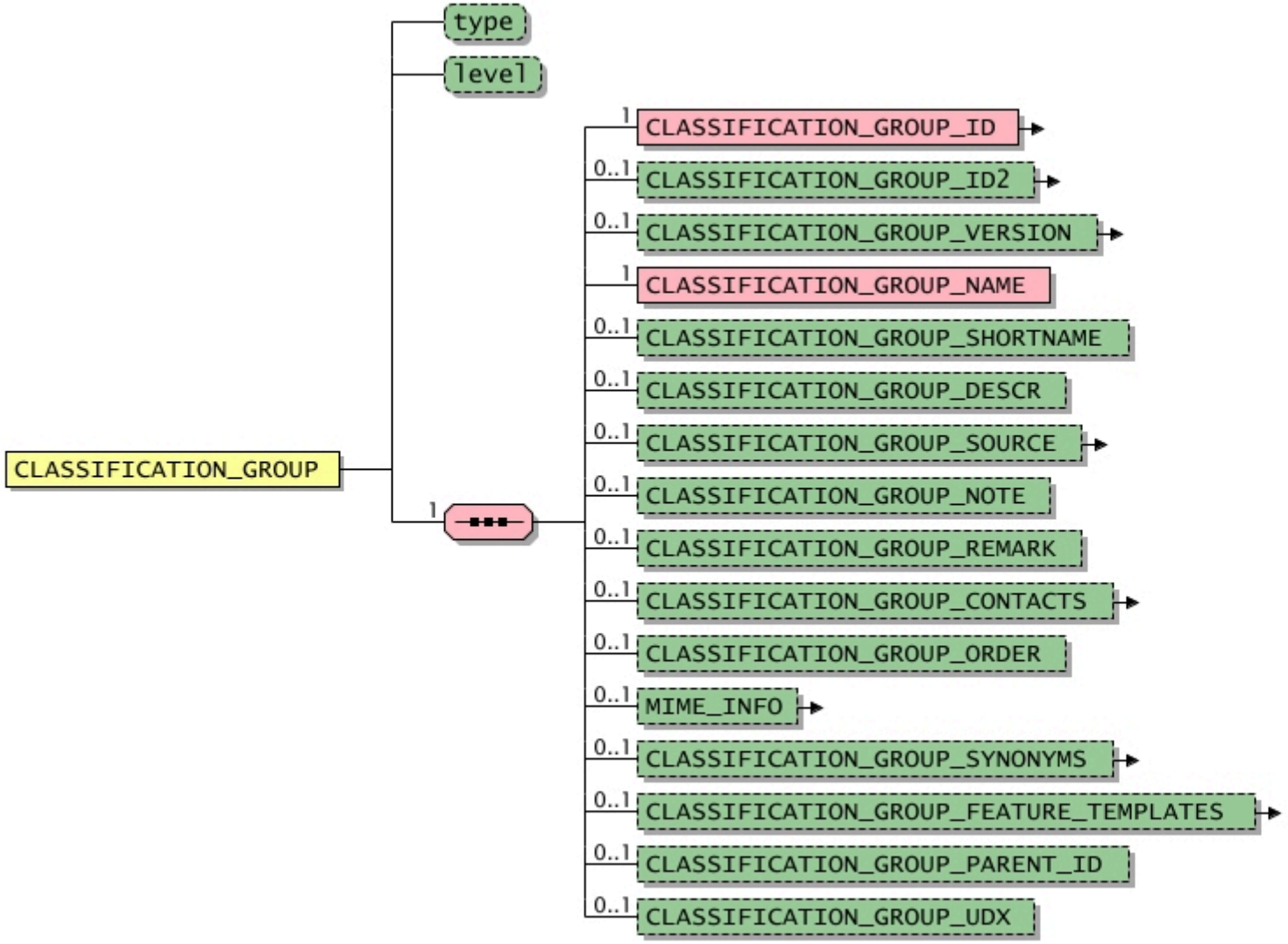

Copyright © 2022 BME e.V. - BMEcat® Version 2005.2
Copyright © 2010-2021 BME e.V. - BMEcat® Version 2005.1
Copyright © 2005-2009 BME e.V. - BMEcat® Version 2005
Copyright © 1998–2004 Fraunhofer IAO, Stuttgart; Universität Essen BLI - BMEcat® Version 1.2

General

Used in	Default value	Data type	Field length	Lang. specific	l.chg. in ver.
CLASSIFICATION_GROUPS	-	-	-	-	2005

Attributes

Designation	Attribute name	Mandatory/ optional	Explanation	Default value	Data type	Field length	Lang. specific	l.chg. in ver.
Group type	type	Optional	This attribute specifies whether the group is on the lowest level of the classification system. See also: **Permitted values for attribute "type"**	-	**dtSTRING**	4	-	-
Hierarchy level	level	Optional	This attribute specifies the hierarchy level of the group as an integer. 2005fd: The data type of this attribute has been changed from **dtINTEGER** to **dtCOUNT** in order to prevent negative hierarchy levels.	-	**dtCOUNT**	-	-	2005fd

Permitted values for attribute "type"

Designation	Attribute value	Explanation	l.chg. in ver.
Leaf	leaf	The group is on the lowest level of the hierarchy.	-
Branch	node	The group is a branch within the hierarchy, i.e. there is at least one group below this group.	-

Elements

Designation	Element name	Mandatory/ Optional	Single/ Multiple	Explanation	Default value	Data type	Field length	Lang. specific	l.chg. in ver.
Identification of the group	**CLASSIFICATION_ GROUP_ID - type**	Mandatory	Single	Unique identification of the group within the classification system. When transferring the eCl@ss classification system, this element has to be filled with the eCl@ss field 'idcl' (primary key). For example: AAA223001.	-	**dtSTRING**	60	-	-
Additional group ID	**CLASSIFICATION_ GROUP_ID2 - type**	Optional	Single	Additional identifier of the group. This element can be used if the classification system defines two different identifiers for the same group. When transferring the eCl@ss classification system, this element has to be filled with the eCl@ss field 'coded name' (eCl@ss number). For example: 24-01-04-01. 	-	**dtSTRING**	60	-	2005fd

Copyright © 2022 BME e.V. - BMEcat® Version 2005.2
Copyright © 2010-2021 BME e.V. - BMEcat® Version 2005.1
Copyright © 2005-2009 BME e.V. - BMEcat® Version 2005
Copyright © 1998–2004 Fraunhofer IAO, Stuttgart; Universität Essen BLI - BMEcat® Version 1.2

Elements

Designation	Element name	Mandatory/ Optional	Single/ Multiple	Explanation	Default value	Data type	Field length	Lang. specific	l.chg. in ver.
Group version	**CLASSIFICATION_ GROUP_VERSION**	Optional	Single	Detailed information about the version of the group.	-	-	-	-	2005fd
Group name	**CLASSIFICATION_ GROUP_NAME**	Mandatory	Single	Specifies the unique name of the group within the classification system. The name of a group is language-specific, the identification is not. 2005fd: The maximum length has been extended from 60 characters to 250 characters. **Example** `<CLASSIFICATION_GROUP_NAME>NV halogen lamp</CLASSIFICATION_GROUP_NAME>`	-	**dtMLSTRING**	250	Yes	2005fd
Group short name	**CLASSIFICATION_ GROUP_SHORTNAME**	Optional	Single	Short name of the group in addition to its group name. 2005fd: New element	-	**dtMLSTRING**	80	Yes	2005fd
Additional description of the group	**CLASSIFICATION_ GROUP_DESCR**	Optional	Single	This element can be used to describe the group in more detail. 2005fd: The maximum length has been extended from 250 characters to 16,000 characters. **Example** `<CLASSIFICATION_GROUP_DESCR> Halogen lamp up to 12 V</CLASSIFICATION_GROUP_DESCR>`	-	**dtMLSTRING**	16000	Yes	2005fd
Group source	**CLASSIFICATION_ GROUP_SOURCE**	Optional	Single	Information on the source of the definition that is given in **CLASSIFICATION_GROUP_ DESCR**, e.g., a reference to a standard.	-	-	-	-	2005
Classification group note	**CLASSIFICATION_ GROUP_NOTE**	Optional	Single	Note giving additional information about the group and its definition. The note should be taken from the source document of the definition (**CLASSIFICATION_GROUP_ SOURCE**). This element has been adopted from ISO 13584. 2005fd: New element	-	**dtMLSTRING**	16000	Yes	2005fd

Copyright © 2022 BME e.V. - BMEcat® Version 2005.2
Copyright © 2010-2021 BME e.V. - BMEcat® Version 2005.1
Copyright © 2005-2009 BME e.V. - BMEcat® Version 2005
Copyright © 1998–2004 Fraunhofer IAO, Stuttgart; Universität Essen BLI - BMEcat® Version 1.2

Elements

Designation	Element name	Mandatory/ Optional	Single/ Multiple	Explanation	Default value	Data type	Field length	Lang. specific	l.chg. in ver.
Group remark	**CLASSIFICATION_ GROUP_REMARK**	Optional	Single	Remark giving additional information about the group and its definition. The remark contains supplementing information, i.e. it describes a specific aspect that is relevant for using the respective group. This element has been adopted from ISO 13584. 2005fd: New element	-	**dtMLSTRING**	16000	Yes	2005fd
Classification group contacts	**CLASSIFICATION_ GROUP_CONTACTS**	Optional	Single	The contacts referenced by this element are responsible for the respective group, i.e. for purchasing these types of products. 	-	-	-	-	2005
Group order	**CLASSIFICATION_ GROUP_ORDER**	Optional	Single	Order number for the graphical user interface. When groups are listed they are always represented in ascending order (the first group is the one with the lowest number). 2005fd: New element	-	**dtINTEGER**	-	-	2005fd
Additional multimedia information	**MIME_INFO**	Optional	Single	Information about multimedia files	-	-	-	-	-
Group synonyms	**CLASSIFICATION_ GROUP_SYNONYMS**	Optional	Single	List of synonyms for the group name	-	-	-	-	-
Features of the group	**CLASSIFICATION_ GROUP_FEATURE_ TEMPLATES**	Optional	Single	Contains the features of the group	-	-	-	-	-
Parent group	**CLASSIFICATION_ GROUP_PARENT_ID**	Optional	Single	This element references the unique identification of the parent group (**CLASSIFICATION_GROUP_ID**). If there is no parent group for the group, this element must not be used.	-	**dtSTRING**	60	-	-
User-defined extension	**CLASSIFICATION_ GROUP_UDX**	Optional	Single	This element marks the area in which user-defined elements can be added to a catalog document. In this way it is possible for supplier and purchasing organization to exchange additional data which is not specified in the standard. The structures of the elements may be complicated. Any XML expressions are permitted. In the various contexts in which they can occur, USER_DEFINED_EXTENSIONS are defined exclusively as Can fields. Therefore, it is expressly pointed out that if user-defined extensions are used they must be compatible with the target systems and should be clarified on a case-to-case basis. The names of the elements must be clearly distinguishable from the names of other elements contained in the BMEcat standard. For this reason, all element must start with the string "UDX" (Example: <UDX.supplier.elementname>). When user-defined elements are to be transferred, the entity USERDEFINES, which is defined in the bmecat_base.dtd, must be newly-defined in the XML document. This enables the user to define even complex structures according to his own requirements.	-	**udxCLASSGROUP**	-	-	2005fd

Copyright © 2022 BME e.V. - BMEcat® Version 2005.2
Copyright © 2010-2021 BME e.V. - BMEcat® Version 2005.1
Copyright © 2005-2009 BME e.V. - BMEcat® Version 2005
Copyright © 1998–2004 Fraunhofer IAO, Stuttgart; Universität Essen BLI - BMEcat® Version 1.2

Elements									
Designation	Element name	Mandatory/ Optional	Single/ Multiple	Explanation	Default value	Data type	Field length	Lang. specific	l.chg. in ver.
				2005fd: New element					

Example
see example for the element **CLASSIFICATION_GROUPS , Beispiel 1**

Copyright © 2022 BME e.V. - BMEcat® Version 2005.2
Copyright © 2010-2021 BME e.V. - BMEcat® Version 2005.1
Copyright © 2005-2009 BME e.V. - BMEcat® Version 2005
Copyright © 1998–2004 Fraunhofer IAO, Stuttgart; Universität Essen BLI - BMEcat® Version 1.2

CLASSIFICATION_GROUP_ID

(Identification of the group)

This element contains the unique identification of the group within the classification system.

When transferring the eCl@ss classification system, this element has to be filled with the eCl@ss field 'idcl' (primary key). For example: AAA223001.

General						
Used in	Default value	Data type	Field length	Lang. specific	I.chg. in ver.	
CLASSIFICATION_GROUP	-	**dtSTRING**	60	-	-	

Attributes								
Designation	Attribute name	Mandatory/ optional	Explanation	Default value	Data type	Field length	Lang. specific	I.chg. in ver.
Codification	type	Optional	Determines whether the group ID describes the position of the respective group in the hierarchy. 2005fd: New attribute See also: **Permitted values for attribute "type"**	-	**dtSTRING**	20	-	2005fd

Permitted values for attribute "type"			
Designation	Attribute value	Explanation	I.chg. in ver.
flat	flat	The group ID does not describe the position of the respective group in the hierarchy.	2005fd
Hierarchy	hierarchy	The group ID describes the position of the respective group in the hierarchy.	2005fd

Copyright © 2022 BME e.V. - BMEcat® Version 2005.2
Copyright © 2010-2021 BME e.V. - BMEcat® Version 2005.1
Copyright © 2005-2009 BME e.V. - BMEcat® Version 2005
Copyright © 1998–2004 Fraunhofer IAO, Stuttgart; Universität Essen BLI - BMEcat® Version 1.2

CLASSIFICATION_GROUP_ID2

(Additional group ID)

This element contains an additional identifier of the group. This element can be used if the classification system defines two different identifiers for the same group.

When transferring the eCl@ss classification system, this element has to be filled with the eCl@ss field 'coded name' (eCl@ss number). For example: 24-01-04-01.

2005fd: New element

General					
Used in	Default value	Data type	Field length	Lang. specific	l.chg. in ver.
CLASSIFICATION_GROUP	-	**dtSTRING**	60	-	2005fd

Attributes								
Designation	Attribute name	Mandatory/ optional	Explanation	Default value	Data type	Field length	Lang. specific	l.chg. in ver.
Codification	type	Optional	Determines whether the group ID describes the position of the respective group in the hierarchy. See also: **Permitted values for attribute "type"**	-	**dtSTRING**	20	-	2005fd

Permitted values for attribute "type"			
Designation	Attribute value	Explanation	l.chg. in ver.
flat	flat	The group ID does not describe the position of the respective group in the hierarchy.	2005fd
Hierarchy	hierarchy	The group ID describes the position of the respective group in the hierarchy.	2005fd

Copyright © 2022 BME e.V. - BMEcat® Version 2005.2
Copyright © 2010-2021 BME e.V. - BMEcat® Version 2005.1
Copyright © 2005-2009 BME e.V. - BMEcat® Version 2005
Copyright © 1998–2004 Fraunhofer IAO, Stuttgart; Universität Essen BLI - BMEcat® Version 1.2

CLASSIFICATION_GROUP_VERSION

(Group version)

This element can be used to describe the version of the group. It consists of current version, revision, date and original version.

2005fd: New element

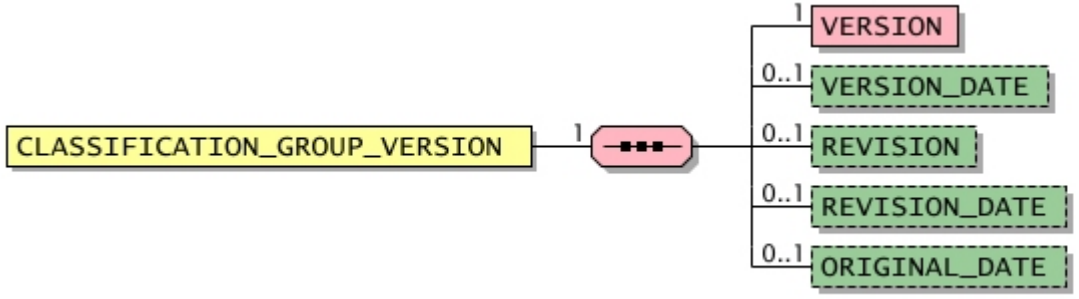

General					
Used in	Default value	Data type	Field length	Lang. specific	l.chg. in ver.
CLASSIFICATION_GROUP	-	-	-	-	2005fd

Elements									
Designation	Element name	Mandatory/ Optional	Single/ Multiple	Explanation	Default value	Data type	Field length	Lang. specific	l.chg. in ver.
Version	**VERSION**	Mandatory	Single	Detailled information on the version 2005fd: New element	-	**dtSTRING**	20	-	2005fd
Version date	**VERSION_DATE**	Optional	Single	Date of the given version 2005fd: New element	-	**dtDATETIME**	-	-	2005fd
Revision	**REVISION**	Optional	Single	Revision number of the given version 2005fd: New element	-	**dtSTRING**	20	-	2005fd

Copyright © 2022 BME e.V. - BMEcat® Version 2005.2
Copyright © 2010-2021 BME e.V. - BMEcat® Version 2005.1
Copyright © 2005-2009 BME e.V. - BMEcat® Version 2005
Copyright © 1998–2004 Fraunhofer IAO, Stuttgart; Universität Essen BLI - BMEcat® Version 1.2

Elements

Designation	Element name	Mandatory/ Optional	Single/ Multiple	Explanation	Default value	Data type	Field length	Lang. specific	l.chg. in ver.
Revision date	**REVISION_DATE**	Optional	Single	Date of the latest revision 2005fd: New element	-	**dtDATETIME**	-	-	2005fd
Original date	**ORIGINAL_DATE**	Optional	Single	Date of the first version in its first revision 2005fd: New element	-	**dtDATETIME**	-	-	2005fd

Copyright © 2022 BME e.V. - BMEcat® Version 2005.2
Copyright © 2010-2021 BME e.V. - BMEcat® Version 2005.1
Copyright © 2005-2009 BME e.V. - BMEcat® Version 2005
Copyright © 1998–2004 Fraunhofer IAO, Stuttgart; Universität Essen BLI - BMEcat® Version 1.2

CLASSIFICATION_GROUP_SOURCE

(Group source)

This element provides information on the source of the definition that is given in **CLASSIFICATION_GROUP_DESCR**, e.g., a reference to a standard.

2005fd: New element
2005: The sub-element **SOURCE_DESCR** was renamed to **SOURCE_NAME**.

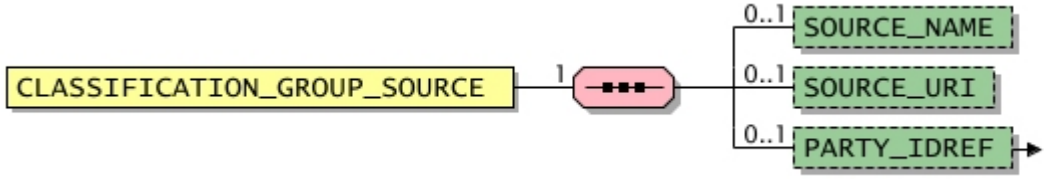

General

Used in	Default value	Data type	Field length	Lang. specific	l.chg. in ver.
CLASSIFICATION_GROUP	-	-	-	-	2005

Elements

Designation	Element name	Mandatory/ Optional	Single/ Multiple	Explanation	Default value	Data type	Field length	Lang. specific	l.chg. in ver.
Source description	**SOURCE_NAME**	Optional	Single	Description of the source, e.g., the name of the document or standard 2005fd: New element 2005: This element was named **SOURCE_DESCR** in Version 2005 final draft, now it is named **SOURCE_NAME**. The maximum length has been reduced from 250 characters to 80 characters.	-	**dtMLSTRING**	80	Yes	2005
URI of the source	**SOURCE_URI**	Optional	Single	URI of the source, e.g., pointing to the document or standard 2005fd: New element	-	**dtSTRING**	255	-	2005fd
Reference to a business partner	**PARTY_IDREF - type**	Optional	Single	Reference to a business partner. It contains the unique identifier (**PARTY_ID**) of the respective party (element **PARTY**).	-	**dtSTRING**	250	-	2005fd

Copyright © 2022 BME e.V. - BMEcat® Version 2005.2
Copyright © 2010-2021 BME e.V. - BMEcat® Version 2005.1
Copyright © 2005-2009 BME e.V. - BMEcat® Version 2005
Copyright © 1998–2004 Fraunhofer IAO, Stuttgart; Universität Essen BLI - BMEcat® Version 1.2

Copyright © 2022 BME e.V. - BMEcat® Version 2005.2
Copyright © 2010-2021 BME e.V. - BMEcat® Version 2005.1
Copyright © 2005-2009 BME e.V. - BMEcat® Version 2005
Copyright © 1998–2004 Fraunhofer IAO, Stuttgart; Universität Essen BLI - BMEcat® Version 1.2

CLASSIFICATION_GROUP_CONTACTS

(Classification group contacts)

This element contains contact information for the respective group.

2005fd: New element
2005: The sub-element **CONTACT_IDREF** may occur more than once.

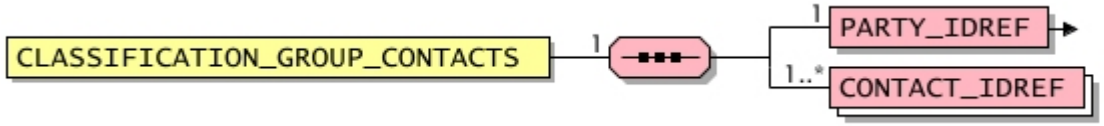

General					
Used in	Default value	Data type	Field length	Lang. specific	l.chg. in ver.
CLASSIFICATION_GROUP	-	-	-	-	2005

Elements

Designation	Element name	Mandatory/ Optional	Single/ Multiple	Explanation	Default value	Data type	Field length	Lang. specific	l.chg. in ver.
Reference to a business partner	**PARTY_IDREF - type**	Mandatory	Single	Reference to a business partner. It contains the unique identifier (**PARTY_ID**) of the respective party (element **PARTY**).	-	**dtSTRING**	250	-	2005fd
Reference to a contact	**CONTACT_IDREF**	Mandatory	Multiple	This element provides a reference to a contact. It contains the unique identifier **CONTACT_ID** that is defined for the partner, which has been referenced in the **PARTY_IDREF** element. 2005fd: New element 2005: The maximum length has been extended from 50 characters to 60 characters.	-	**dtSTRING**	60	-	2005

Copyright © 2022 BME e.V. - BMEcat® Version 2005.2
Copyright © 2010-2021 BME e.V. - BMEcat® Version 2005.1
Copyright © 2005-2009 BME e.V. - BMEcat® Version 2005
Copyright © 1998–2004 Fraunhofer IAO, Stuttgart; Universität Essen BLI - BMEcat® Version 1.2

CLASSIFICATION_GROUP_SYNONYMS

(Group synonyms)

This element contains the synonyms for the group name.

General					
Used in	Default value	Data type	Field length	Lang. specific	l.chg. in ver.
CLASSIFICATION_GROUP	-	-	-	-	-

Elements									
Designation	Element name	Mandatory/ Optional	Single/ Multiple	Explanation	Default value	Data type	Field length	Lang. specific	l.chg. in ver.
Synonym	**SYNONYM**	Mandatory	Single	The synonym support name-based product search. * 2005fd: The maximum length has been extended from 60 characters to 80 characters.	-	**dtMLSTRING**	80	Yes	2005fd

Example
see example for the **CLASSIFICATION_GROUPS , Beispiel 1** element

Copyright © 2022 BME e.V. - BMEcat® Version 2005.2
Copyright © 2010-2021 BME e.V. - BMEcat® Version 2005.1
Copyright © 2005-2009 BME e.V. - BMEcat® Version 2005
Copyright © 1998–2004 Fraunhofer IAO, Stuttgart; Universität Essen BLI - BMEcat® Version 1.2

CLASSIFICATION_GROUP_FEATURE_TEMPLATES

(Features of the group)

This element contains the features for the group. The feature list is built by referencing features that have been defined group-independently in the **CLASSIFICATION_SYSTEM_FEATURE_TEMPLATES** element.

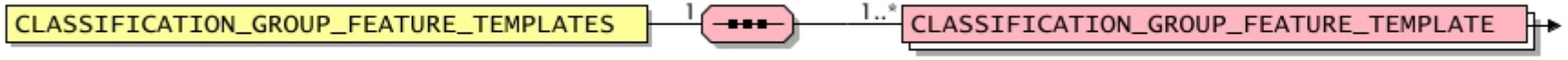

General					
Used in	Default value	Data type	Field length	Lang. specific	l.chg. in ver.
CLASSIFICATION_GROUP	-	-	-	-	-

Elements									
Designation	Element name	Mandatory/ Optional	Single/ Multiple	Explanation	Default value	Data type	Field length	Lang. specific	l.chg. in ver.
Feature of the group	**CLASSIFICATION_ GROUP_FEATURE_ TEMPLATE**	Mandatory	Multiple	Defines a feature of the group by referencing a feature that has been defined group-independently (see **CLASSIFICATION_SYSTEM_FEATURE_TEMPLATE** element). *	-	-	-	-	2005

Example

see Example for the **CLASSIFICATION_GROUPS , Beispiel 1** element

Copyright © 2022 BME e.V. - BMEcat® Version 2005.2
Copyright © 2010-2021 BME e.V. - BMEcat® Version 2005.1
Copyright © 2005-2009 BME e.V. - BMEcat® Version 2005
Copyright © 1998–2004 Fraunhofer IAO, Stuttgart; Universität Essen BLI - BMEcat® Version 1.2

CLASSIFICATION_GROUP_FEATURE_TEMPLATE

(Feature of the group)

This element defines a feature being part of the feature list of the group. This is done by referencing the group-independent definition (see **CLASSIFICATION_SYSTEM_FEATURE_TEMPLATE** element), which can be complemented or replaced, if necessary.

2005fd: The element was revised and the following sub-elements were added: **FT_VALUES** (in 2005fd FT_DOMAIN_VALUES), **FT_VALENCY**, **FT_SYMBOL**, **MIME_INFO**, **FT_SOURCE**, **FT_NOTE**, **FT_REMARK**
2005: The sub-element **FT_DOMAIN_VALUES** was renamed to **FT_VALUES**. The sub-element **FT_UNIT_IDREF** was added as an alternative to **FT_UNIT**. The sub-elements **FT_MANDATORY** and **FT_DATATYPE** were changed from mandatory elements to optional elements. The sub-element **FT_DEPENDENCIES** was added.

Copyright © 2022 BME e.V. - BMEcat® Version 2005.2
Copyright © 2010-2021 BME e.V. - BMEcat® Version 2005.1
Copyright © 2005-2009 BME e.V. - BMEcat® Version 2005
Copyright © 1998–2004 Fraunhofer IAO, Stuttgart; Universität Essen BLI - BMEcat® Version 1.2

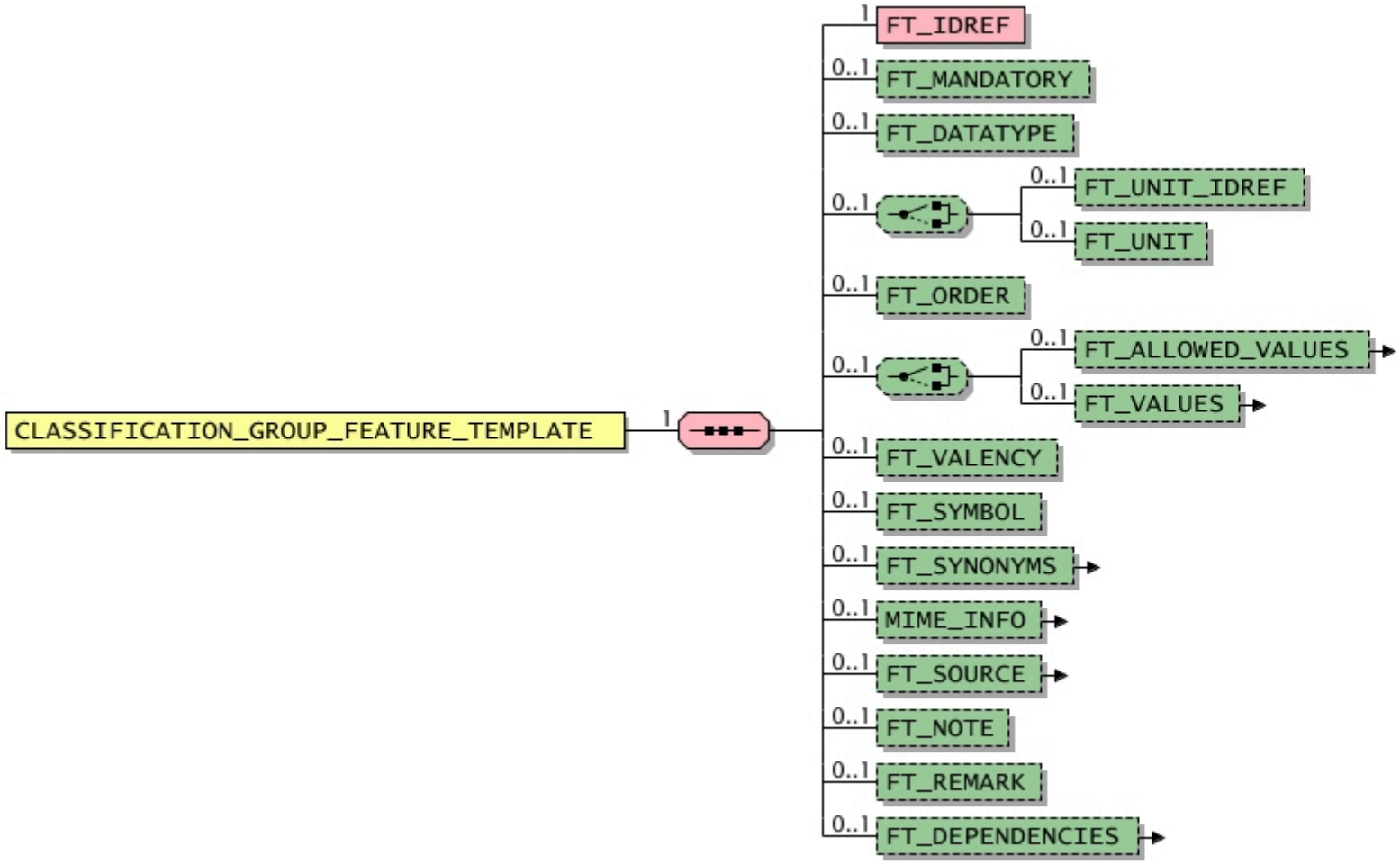

General					
Used in	Default value	Data type	Field length	Lang. specific	l.chg. in ver.
CLASSIFICATION_GROUP_FEATURE_TEMPLATES	-	-	-	-	2005

Copyright © 2022 BME e.V. - BMEcat® Version 2005.2
Copyright © 2010-2021 BME e.V. - BMEcat® Version 2005.1
Copyright © 2005-2009 BME e.V. - BMEcat® Version 2005
Copyright © 1998–2004 Fraunhofer IAO, Stuttgart; Universität Essen BLI - BMEcat® Version 1.2

Elements

Designation	Element name	Mandatory/ Optional	Single/ Multiple	Explanation	Default value	Data type	Field length	Lang. specific	l.chg. in ver.
Feature reference	**FT_IDREF**	Mandatory	Single	Reference to the unique ID of a feature (see**CLASSIFICATION_SYSTEM_FEATURE_TEMPLATE**)	-	**dtSTRING**	60	-	-
Mandatory feature	**FT_MANDATORY**	Optional	Single	This element specifies, whether the feature is mandatory or optional; if so, the feature must be used when classifying a respective product.	-	**dtBOOLEAN**	-	-	-
Feature data type	**FT_DATATYPE**	Optional	Single	This element contains the data type of the feature. See also: **Permitted values for element FT_DATATYPE**	-	**dtSTRING**	20	-	-
Feature unit ID reference	**FT_UNIT_IDREF**	Optional	Single	Reference to the unique ID of a unit of measurement. The reference must point to a **UNIT_ID**, which has been defined in the **UNIT** element for the respective classification system. This element can only be used for defining features of a classification system. Therefore, it can not used on the product level for defining static features (**PRODUCT_FEATURES**) or for configuration purposes (**CONFIG_FEATURE**). 2005fd: This new element replaces with a modified semantics the former **FT_UNIT** element.	-	**dtSTRING**	60	-	2005fd
Feature unit	**FT_UNIT**	Optional	Single	Unit of measurement for the feature; the unit should be coded in accordance with the **dtUNIT** data type. 2005fd: The maximum length has been extended from 20 characters to 80 characters.	-	**dtSTRING**	80	-	2005fd
Feature order	**FT_ORDER**	Optional	Single	Defines the order (sequence) in which the feature has to be presented in the target system.	-	**dtINTEGER**	-	-	-
Feature values	**FT_ALLOWED_VALUES**	Optional	Single	List of allowed values for the feature	-	-	-	-	-
Feature domain values	**FT_VALUES**	Optional	Single	List of allowed values for the feature (only available for enumerative features) 	-	-	-	-	2005
Feature valency	**FT_VALENCY**	Optional	Single	Indicates whether the product feature can have more than one value (**multivalent**) or only one value (**univalent**). 2005fd: New element See also: **Permitted values for element FT_VALENCY**	univalent	**dtSTRING**	20	-	2005fd
Feature symbol	**FT_SYMBOL**	Optional	Single	Symbol of the feature	-	**dtMLSTRING**	20	Yes	1.2
Feature synonyms	**FT_SYNONYMS**	Optional	Single	List of synonyms for the feature name	-	-	-	-	2005fd

Copyright © 2022 BME e.V. - BMEcat® Version 2005.2
Copyright © 2010-2021 BME e.V. - BMEcat® Version 2005.1
Copyright © 2005-2009 BME e.V. - BMEcat® Version 2005
Copyright © 1998–2004 Fraunhofer IAO, Stuttgart; Universität Essen BLI - BMEcat® Version 1.2

Elements

Designation	Element name	Mandatory/ Optional	Single/ Multiple	Explanation	Default value	Data type	Field length	Lang. specific	l.chg. in ver.
Additional multimedia information	**MIME_INFO**	Optional	Single	Information about multimedia files	-	-	-	-	-
Feature source	**FT_SOURCE**	Optional	Single	Source for the feature definition which has been given in the **FT_DESCR** element; e.g. a reference to a document, standard or definition describing the feature.	-	-	-	-	2005
Feature note	**FT_NOTE**	Optional	Single	The note should be extracted from the source of the definition (element **FT_SOURCE**). It increases the tangibility of the definition. This element has been adopted from ISO 13584. 2005fd: New element	-	**dtMLSTRING**	16000	Yes	2005fd
Feature remark	**FT_REMARK**	Optional	Single	Remark giving additional information about the feature and its definition. This element has been adopted from ISO 13584. 2005fd: New element	-	**dtMLSTRING**	16000	Yes	2005fd
Feature dependencies	**FT_DEPENDENCIES**	Optional	Single	List of features on which the current feature depends	-	-	-	-	2005

Permitted values for element FT_DATATYPE

Designation	Element value	Explanation	l.chg. in ver.
Alphanumeric	alphanumeric	Alphanumeric string, see also data type **dtSTRING**	-
Boolean value	boolean	"true" or "false", see data type **dtBOOLEAN**	-
Class instance type	class_instance_type	Reference to a classification group. By this type it is possible to define a feature that establishes a relationship to another product class; e.g., feature "component". This type has been adopted from the ISO 13584 standard. 2005: New value	2005
Positive number	count	Positive number, see also data type **dtCOUNT**	2005fd

Copyright © 2022 BME e.V. - BMEcat® Version 2005.2
Copyright © 2010-2021 BME e.V. - BMEcat® Version 2005.1
Copyright © 2005-2009 BME e.V. - BMEcat® Version 2005
Copyright © 1998–2004 Fraunhofer IAO, Stuttgart; Universität Essen BLI - BMEcat® Version 1.2

Permitted values for element FT_DATATYPE			
Designation	Element value	Explanation	l.chg. in ver.
		2005fd: New value	
Currency	currency	Currency code, see also data type **dtCURRENCIES** 2005: New value	2005
Date	date	Date, see also data type **dtDATETIME** 2005fd: New value	2005fd
Date and time	date-time	Date and time, see also data type **dtDATETIME** 2005fd: New value	2005fd
Floating-point number	float	Floating-point number, see also data type **dtFLOAT** 2005fd: New value	2005fd
Integer value	integer	Integer value, see also data type **dtINTEGER**	-
Boolean value	logic	"true" or "false", see data type **dtBOOLEAN**	-
Named type	named_type	Named type. This type has been adopted from the ISO 13584 standard. 2005: New value	2005
Number	number	Number, see also data type **dtNUMBER**	-
Numeric	numeric	Numeric, see also data type **dtNUMBER**	-
Integer range	range-integer	Range definition by two integer values (see also**FEATURE , Beispiel 1**)	-
Numeric range	range-numeric	Range definition by two numeric values (see also**FEATURE , Beispiel 1**)	-
Alphanumeric set	set-alphanumeric	Set of alphanumeric values (see also **FEATURE , Beispiel 1**)	-
Integer set	set-integer	Set of integer values (see also **FEATURE , Beispiel 1**)	-
Numeric set	set-numeric	Set of numeric values (see also **FEATURE , Beispiel 1**)	-
Alphanumeric	string	Alphanumeric string, see also data type **dtSTRING**	-
Time	time	Time, see also data type **dtTIME** 	2005fd

Copyright © 2022 BME e.V. - BMEcat® Version 2005.2
Copyright © 2010-2021 BME e.V. - BMEcat® Version 2005.1
Copyright © 2005-2009 BME e.V. - BMEcat® Version 2005
Copyright © 1998–2004 Fraunhofer IAO, Stuttgart; Universität Essen BLI - BMEcat® Version 1.2

Permitted values for element FT_DATATYPE			
Designation	Element value	Explanation	l.chg. in ver.
		2005fd: New value	

Permitted values for element FT_VALENCY			
Designation	Element value	Explanation	l.chg. in ver.
Multivalent	multivalent	The feature can have more than one value.	2005fd
Univalent	**univalent**	The feature can only have one value.	2005fd

Example
see Example for the **CLASSIFICATION_GROUPS , Beispiel 1** element

Copyright © 2022 BME e.V. - BMEcat® Version 2005.2
Copyright © 2010-2021 BME e.V. - BMEcat® Version 2005.1
Copyright © 2005-2009 BME e.V. - BMEcat® Version 2005
Copyright © 1998–2004 Fraunhofer IAO, Stuttgart; Universität Essen BLI - BMEcat® Version 1.2

FT_ALLOWED_VALUES

(Feature values)

This element defines the allowed values for the feature by referring to previously defined values (**ALLOWED_VALUES**).

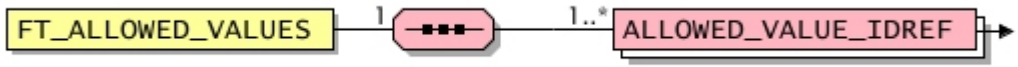

General					
Used in	Default value	Data type	Field length	Lang. specific	l.chg. in ver.
CLASSIFICATION_GROUP_FEATURE_TEMPLATE	-	-	-	-	-

Elements									
Designation	Element name	Mandatory/ Optional	Single/ Multiple	Explanation	Default value	Data type	Field length	Lang. specific	l.chg. in ver.
Value ID reference	**ALLOWED_VALUE_ IDREF - order**	Mandatory	Multiple	Reference to an allowed value taken from the list of all values (siehe **ALLOWED_ VALUES**) of the classification system.	-	**dtSTRING**	60	-	-

Example

see example for the **CLASSIFICATION_GROUPS , Beispiel 1** element

Copyright © 2022 BME e.V. - BMEcat® Version 2005.2
Copyright © 2010-2021 BME e.V. - BMEcat® Version 2005.1
Copyright © 2005-2009 BME e.V. - BMEcat® Version 2005
Copyright © 1998–2004 Fraunhofer IAO, Stuttgart; Universität Essen BLI - BMEcat® Version 1.2

ALLOWED_VALUE_IDREF

(Value ID reference)

This element references an allowed values taken from the list of all values (see **ALLOWED_VALUES**) of the classification system.

General					
Used in	Default value	Data type	Field length	Lang. specific	l.chg. in ver.
FT_ALLOWED_VALUES	-	**dtSTRING**	60	-	-

Attributes								
Designation	Attribute name	Mandatory/ optional	Explanation	Default value	Data type	Field length	Lang. specific	l.chg. in ver.
Sequence of the allowed value	order	Optional	This attribute contains the sequence, in which target system should list the allowed value within a list of values.	-	**dtINTEGER**	-	-	-

Example

see example for the **CLASSIFICATION_GROUPS , Beispiel 1** element

Copyright © 2022 BME e.V. - BMEcat® Version 2005.2
Copyright © 2010-2021 BME e.V. - BMEcat® Version 2005.1
Copyright © 2005-2009 BME e.V. - BMEcat® Version 2005
Copyright © 1998–2004 Fraunhofer IAO, Stuttgart; Universität Essen BLI - BMEcat® Version 1.2

CATALOG_GROUP_SYSTEM

(Catalog group system)

The purpose of a catalog group system is to structure a set of products hierarchically (e.g., division into chapters in printed catalogs, hierarchical browsing in on-line catalogs). A catalog group system can be constructed from the **CATALOG_STRUCTURE** elements using the **CATALOG_GROUP_SYSTEM** element. Product can then be attached to a catalog group (**CATALOG_STRUCTURE**) using the **PRODUCT_TO_CATALOGGROUP_MAP** in context T_NEW_CATALOG element (in the context **T_NEW_CATALOG**) or **PRODUCT_TO_CATALOGGROUP_MAP** in context T_UPDATE_PRODUCTS (in the context **T_UPDATE_PRODUCTS**).

A catalog group system is built starting at the root and working up to its leaves. The structure is created one layer at a time by defining the required subgroup (subsection) for each catalog group. In BMEcat however, it is not the relevant subgroups which are specified for each catalog group but rather the other way around: the parent group (element **PARENT_ID**) belonging to each catalog subgroup is specified instead. The complete hierarchical catalog group system can be built up in this way.

The order of **CATALOG_STRUCTURE** elements is irrelevant. Furthermore, not every branch of the catalog group system needs necessarily hang as low as all the others, i.e. the tree structure does not have to be balanced.

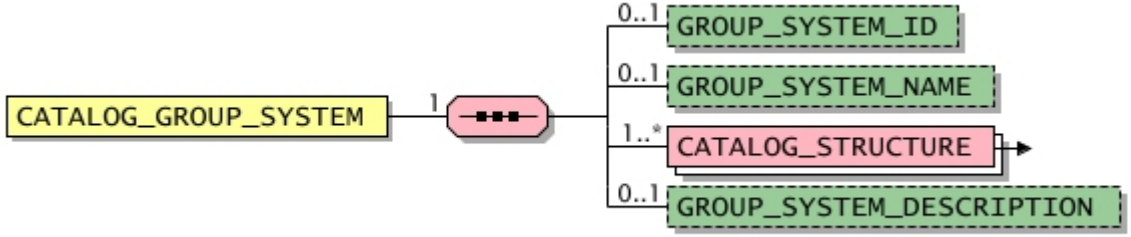

General					
Used in	Default value	Data type	Field length	Lang. specific	I.chg. in ver.
T_NEW_CATALOG	-	-	-	-	-

Elements									
Designation	Element name	Mandatory/ Optional	Single/ Multiple	Explanation	Default value	Data type	Field length	Lang. specific	I.chg. in ver.
Catalog group system ID	**GROUP_SYSTEM_ID**	Optional	Single	Identification of the catalog group system The supplier must allocate a unique identification to his catalog group system.	-	**dtSTRING**	50	-	-
Catalog group system name	**GROUP_SYSTEM_ NAME**	Optional	Single	Name of the catalog group system	-	**dtMLSTRING**	50	Yes	-
Catalog structure element	**CATALOG_STRUCTURE - type**	Mandatory	Multiple	Information on a catalog group	-	-	-	-	-

Copyright © 2022 BME e.V. - BMEcat® Version 2005.2
Copyright © 2010-2021 BME e.V. - BMEcat® Version 2005.1
Copyright © 2005-2009 BME e.V. - BMEcat® Version 2005
Copyright © 1998–2004 Fraunhofer IAO, Stuttgart; Universität Essen BLI - BMEcat® Version 1.2

Elements									
Designation	Element name	Mandatory/ Optional	Single/ Multiple	Explanation	Default value	Data type	Field length	Lang. specific	l.chg. in ver.
Group system description	**GROUP_SYSTEM_ DESCRIPTION**	Optional	Single	Description of the catalog group system	-	**dtMLSTRING**	250	Yes	-

Example

```
<CATALOG_GROUP_SYSTEM>
    <GROUP_SYSTEM_ID>OS2005/06</GROUP_SYSTEM_ID>
    <GROUP_SYSTEM_NAME>Office Supplies 2005/06</GROUP_SYSTEM_NAME>
    <CATALOG_STRUCTURE type="root">
        ...
    </CATALOG_STRUCTURE>
    <CATALOG_STRUCTURE type="node">
        ...
    </CATALOG_STRUCTURE>
    <CATALOG_STRUCTURE type="node">
        ...
    </CATALOG_STRUCTURE>
    <CATALOG_STRUCTURE type="leaf">
        ...
    </CATALOG_STRUCTURE>
    <CATALOG_STRUCTURE type="leaf">
        ...
    </CATALOG_STRUCTURE>
    <CATALOG_STRUCTURE type="leaf">
        ...
    </CATALOG_STRUCTURE>
    <CATALOG_STRUCTURE type="leaf">
        ...
    </CATALOG_STRUCTURE>
    <GROUP_SYSTEM_DESCRIPTION>Office Supplies Catalog 2005/06</GROUP_SYSTEM_DESCRIPTION>
</CATALOG_GROUP_SYSTEM>
```

Copyright © 2022 BME e.V. - BMEcat® Version 2005.2
Copyright © 2010-2021 BME e.V. - BMEcat® Version 2005.1
Copyright © 2005-2009 BME e.V. - BMEcat® Version 2005
Copyright © 1998–2004 Fraunhofer IAO, Stuttgart; Universität Essen BLI - BMEcat® Version 1.2

CATALOG_STRUCTURE

(Catalog structure element)

This element serves the purpose of specifying a group within a catalog group system and linking the group into the hierarchical tree.

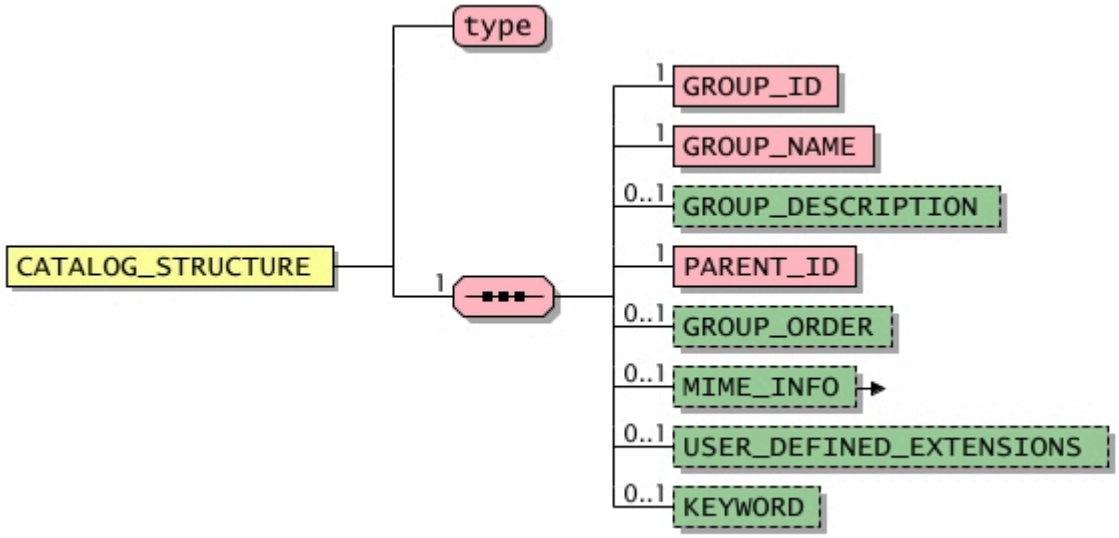

General					
Used in	Default value	Data type	Field length	Lang. specific	l.chg. in ver.
CATALOG_GROUP_SYSTEM	-	-	-	-	-

Attributes								
Designation	Attribute name	Mandatory/ optional	Explanation	Default value	Data type	Field length	Lang. specific	l.chg. in ver.
Catalog group type	type	Mandatory	The "type" attribute specifies the position of the group within the catalog tree. The topmost group in the catalog structure is the only one on the top level and consequently has no parent. It forms the root from which all the other groups branch off and must therefore be the only **CATALOG_ STRUCTURE** element to have the type "root". All groups with no children (on the bottom level), in other words all groups which are not referenced by any other groups, must have the type "leaf". All other groups, in other words those which have both parents and children, must be defined by the type "node".	-	**dtSTRING**	20	-	2005fd

Copyright © 2022 BME e.V. - BMEcat® Version 2005.2
Copyright © 2010-2021 BME e.V. - BMEcat® Version 2005.1
Copyright © 2005-2009 BME e.V. - BMEcat® Version 2005
Copyright © 1998–2004 Fraunhofer IAO, Stuttgart; Universität Essen BLI - BMEcat® Version 1.2

Attributes

Designation	Attribute name	Mandatory/ optional	Explanation	Default value	Data type	Field length	Lang. specific	l.chg. in ver.
			 2005fd: The maximum length has been extended from 4 characters to 20 characters. See also: **Permitted values for attribute "type"**					

Permitted values for attribute "type"

Designation	Attribute value	Explanation	l.chg. in ver.
Leave	leaf	The lowest hierarchical level in a branch of the catalog group system; products are only allowed to be attached to leaves.	-
Branch	node	A catalog group which only contains other subgroups and no individual products.	-
Root	root	The root of a catalog group system; all other groups and subgroups of the catalog group system branch off from this root. The root is only allowed to occur once within each catalog group system.	-

Elements

Designation	Element name	Mandatory/ Optional	Single/ Multiple	Explanation	Default value	Data type	Field length	Lang. specific	l.chg. in ver.
Group ID	**GROUP_ID**	Mandatory	Single	The **GROUP_ID** is a unique designator which identifies the group. It is used to specify the parent-child relationship and to attach articles to the catalog group. The **GROUP_ID** in the topmost group (root) is "1". The **GROUP_ID** of all the other groups is freely selectable, whereby each **GROUP_ID** should only be assigned once.	-	**dtSTRING**	50	-	-
Group name	**GROUP_NAME**	Mandatory	Single	The name of the catalog group is displayed in the target system and allows users to search for and find the group. The name is usually the generic term for all the other groups and articles below it.	-	**dtMLSTRING**	50	Yes	-
Group description	**GROUP_DESCRIPTION**	Optional	Single	This element can be used to describe the group in more detail.	-	**dtMLSTRING**	250	Yes	-
Superordinate leven	**PARENT_ID**	Mandatory	Single	This element specifies the ID of the parent catalog group. The group on the top level (root) represents an exception here because it has no parent. Here 0 must be set.	-	**dtSTRING**	50	-	-
Catalog group order	**GROUP_ORDER**	Optional	Single	When catalog groups are listed they are always represented in ascending order (the first group is the one with the lowest number).	-	**dtINTEGER**	-	-	-
Additional multimedia information	**MIME_INFO**	Optional	Single	Information about multimedia files	-	-	-	-	-
User-defined extension	**USER_DEFINED_ EXTENSIONS** in context HEADER	Optional	Single	This element can be used for transferring information in user-defined non-BMEcat-elements; hence it is possible to extend the pre-defined set of BMEcat-elements by user-defined ones. The usage of those elements results in BMEcat catalog documents, which can only be exchanged between the companies that have agreed on these extensions. The structure of these elements can be very complex, though it must be valid XML.	-	**udxCATALOGGROUP**	-	-	-

Copyright © 2022 BME e.V. - BMEcat® Version 2005.2
Copyright © 2010-2021 BME e.V. - BMEcat® Version 2005.1
Copyright © 2005-2009 BME e.V. - BMEcat® Version 2005
Copyright © 1998–2004 Fraunhofer IAO, Stuttgart; Universität Essen BLI - BMEcat® Version 1.2

Elements

Designation	Element name	Mandatory/ Optional	Single/ Multiple	Explanation	Default value	Data type	Field length	Lang. specific	I.chg. in ver.
				USER_DEFINED_EXTENSIONS are defined exclusively as optional fields. Therefore, it is expressly pointed out that if user-defined extensions are used they must be compatible with the target systems and should be clarified on a case-to-case basis. The names of the elements must be clearly distinguishable from the names of other elements contained in the BMEcat standard. For this reason, all element must start with the string "UDX" (Example: <UDX.supplier.elementname>). The definition of user-defined extensions takes place by additional XML DTD or XML Schema files. **Example: usage of the non-BMEcat elements (XML)** <HEADER> <CATALOG> ... </CATALOG> ... <USER_DEFINED_EXTENSIONS> <UDX.MYORG.METACLASSIFICATION>4624364361 </UDX.MYORG.METACLASSIFICATION> <UDX.MYORG.METACLASSIFICATION2>4624364369 </UDX.MYORG.METACLASSIFICATION2> </USER_DEFINED_EXTENSIONS> </HEADER>					
Keyword	**KEYWORD**	Optional	Single	Keyword that supports product search in target systems	-	**dtMLSTRING**	50	Yes	-

Example

The following example shows a catalog structure consisting of three levels. The boxes stand for the groups. The numbers inside the boxes are the **GROUP_ID**s of the groups. The lines represent the parent-child relationships.

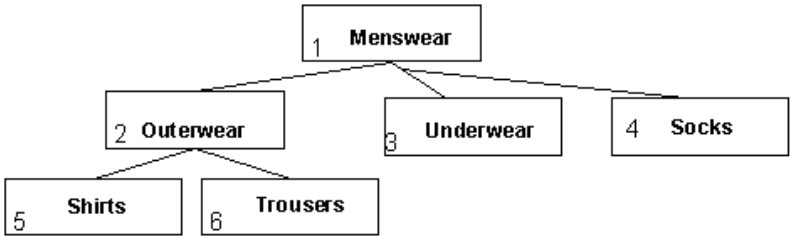

Copyright © 2022 BME e.V. - BMEcat® Version 2005.2
Copyright © 2010-2021 BME e.V. - BMEcat® Version 2005.1
Copyright © 2005-2009 BME e.V. - BMEcat® Version 2005
Copyright © 1998–2004 Fraunhofer IAO, Stuttgart; Universität Essen BLI - BMEcat® Version 1.2

The following **CATALOG_STRUCTURE**s must be entered in order to represent this catalog group system:

```
<CATALOG_GROUP_SYSTEM>
    <GROUP_SYSTEM_ID>HK-2005</GROUP_SYSTEM_ID>
    <GROUP_SYSTEM_NAME>Men's fashion</GROUP_SYSTEM_NAME>
    <CATALOG_STRUCTURE type="root">
        <GROUP_ID>1</GROUP_ID>
        <GROUP_NAME>Meanswear</GROUP_NAME>
        <PARENT_ID>0</PARENT_ID>
    </CATALOG_STRUCTURE>
    <CATALOG_STRUCTURE type="node">
        <GROUP_ID>2</GROUP_ID>
        <GROUP_NAME>Outerwear</GROUP_NAME>
        <GROUP_DESCRIPTION>Topwear fashion for men</GROUP_DESCRIPTION>
        <PARENT_ID>1</PARENT_ID>
        <MIME_INFO>
            <MIME>
                <MIME_TYPE>image/jpeg</MIME_TYPE>
                <MIME_SOURCE>hr_ober.jpg</MIME_SOURCE>
            </MIME>
        </MIME_INFO>
    </CATALOG_STRUCTURE>
    <CATALOG_STRUCTURE type="leaf">
        <GROUP_ID>3</GROUP_ID>
        <GROUP_NAME>Underwear</GROUP_NAME>
        <GROUP_DESCRIPTION>Underwear fashion for men</GROUP_DESCRIPTION>
        <PARENT_ID>1</PARENT_ID>
        <MIME_INFO>
            <MIME>
                <MIME_TYPE>image/jpeg</MIME_TYPE>
                <MIME_SOURCE>hr_unter.jpg</MIME_SOURCE>
            </MIME>
        </MIME_INFO>
    </CATALOG_STRUCTURE>
    <CATALOG_STRUCTURE type="leaf">
        <GROUP_ID>4</GROUP_ID>
        <GROUP_NAME>Socks</GROUP_NAME>
        <GROUP_DESCRIPTION>Socks and more</GROUP_DESCRIPTION>
        <PARENT_ID>1</PARENT_ID>
        <MIME_INFO>
            <MIME>
                <MIME_TYPE>image/jpeg</MIME_TYPE>
                <MIME_SOURCE>stink1.jpg</MIME_SOURCE>
            </MIME>
        </MIME_INFO>
    </CATALOG_STRUCTURE>
    <CATALOG_STRUCTURE type="leaf">
```

Copyright © 2022 BME e.V. - BMEcat® Version 2005.2
Copyright © 2010-2021 BME e.V. - BMEcat® Version 2005.1
Copyright © 2005-2009 BME e.V. - BMEcat® Version 2005
Copyright © 1998–2004 Fraunhofer IAO, Stuttgart; Universität Essen BLI - BMEcat® Version 1.2

```
        <GROUP_ID>5</GROUP_ID>
        <GROUP_NAME>Shirts</GROUP_NAME>
        <GROUP_DESCRIPTION>For business and leisure</GROUP_DESCRIPTION>
        <PARENT_ID>2</PARENT_ID>
        <MIME_INFO>
            <MIME>
                <MIME_TYPE>image/jpeg</MIME_TYPE>
                <MIME_SOURCE>charlie_und_dennis.jpg</MIME_SOURCE>
            </MIME>
        </MIME_INFO>
        <USER_DEFINED_EXTENSIONS>
            <UDX.UGE.LEVEL>4</UDX.UGE.LEVEL>
        </USER_DEFINED_EXTENSIONS>
        <KEYWORD>Short-sleeved shirts</KEYWORD>
        <KEYWORD>Beach shirts</KEYWORD>
    </CATALOG_STRUCTURE>
    <CATALOG_STRUCTURE type="leaf">
        <GROUP_ID>6</GROUP_ID>
        <GROUP_NAME>Trousers</GROUP_NAME>
        <GROUP_DESCRIPTION>For the man about town</GROUP_DESCRIPTION>
        <PARENT_ID>2</PARENT_ID>
        <MIME_INFO>
            <MIME>
                <MIME_TYPE>image/jpeg</MIME_TYPE>
                <MIME_SOURCE>tote_h.jpg</MIME_SOURCE>
            </MIME>
        </MIME_INFO>
    </CATALOG_STRUCTURE>
</CATALOG_GROUP_SYSTEM>
```

Copyright © 2022 BME e.V. - BMEcat® Version 2005.2
Copyright © 2010-2021 BME e.V. - BMEcat® Version 2005.1
Copyright © 2005-2009 BME e.V. - BMEcat® Version 2005
Copyright © 1998–2004 Fraunhofer IAO, Stuttgart; Universität Essen BLI - BMEcat® Version 1.2

FORMULAS

(Dictionary of formulas)

This element contains a list of formulas that are specified in the document header.

2005fd: New element

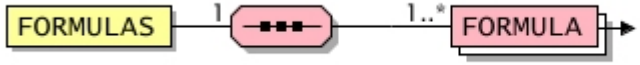

General					
Used in	Default value	Data type	Field length	Lang. specific	l.chg. in ver.
T_NEW_CATALOG, **T_UPDATE_PRICES**, **T_UPDATE_PRODUCTS**	-	-	-	-	2005fd

Elements									
Designation	Element name	Mandatory/ Optional	Single/ Multiple	Explanation	Default value	Data type	Field length	Lang. specific	l.chg. in ver.
Formula	**FORMULA**	Mandatory	Multiple	Definition of a formula on the header level. All required parameters have to be specified here, this can include default values. Eventually, the formula can be referenced on the product level, when referencing a formula, default values can be overwritten with values specific for the respective product.	-	-	-	-	2005fd

Copyright © 2022 BME e.V. - BMEcat® Version 2005.2
Copyright © 2010-2021 BME e.V. - BMEcat® Version 2005.1
Copyright © 2005-2009 BME e.V. - BMEcat® Version 2005
Copyright © 1998–2004 Fraunhofer IAO, Stuttgart; Universität Essen BLI - BMEcat® Version 1.2

FORMULA

(Formula)

This element is used to define a formula on the header level. All required parameters have to be specified here, this can include default values. Eventually, the formula can be referenced on the product level, when referencing a formula, default values can be overwritten with values specific for the respective product.

2005fd: New element

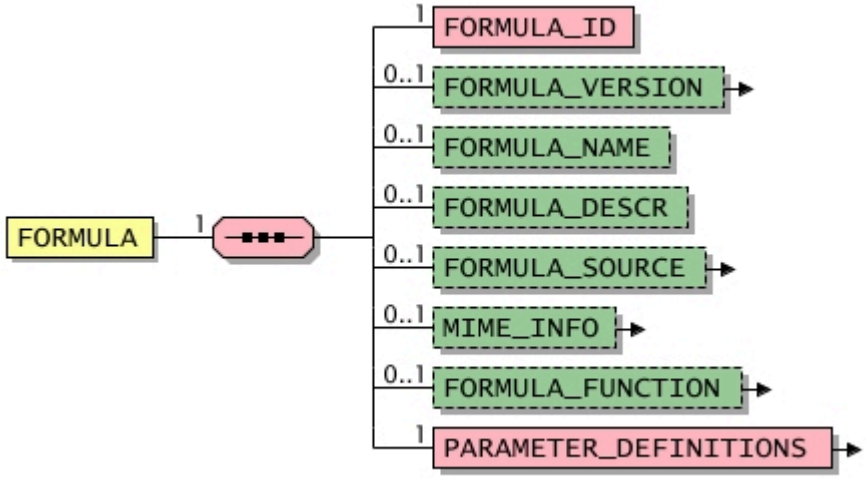

General					
Used in	Default value	Data type	Field length	Lang. specific	l.chg. in ver.
FORMULAS	-	-	-	-	2005fd

Elements									
Designation	Element name	Mandatory/ Optional	Single/ Multiple	Explanation	Default value	Data type	Field length	Lang. specific	l.chg. in ver.
Formula ID	**FORMULA_ID**	Mandatory	Single	Unique identifier of the formula. This ID is used on the product level to reference the formula. 2005fd: New element	-	**dtSTRING**	60	-	2005fd

Copyright © 2022 BME e.V. - BMEcat® Version 2005.2
Copyright © 2010-2021 BME e.V. - BMEcat® Version 2005.1
Copyright © 2005-2009 BME e.V. - BMEcat® Version 2005
Copyright © 1998–2004 Fraunhofer IAO, Stuttgart; Universität Essen BLI - BMEcat® Version 1.2

Elements									
Designation	Element name	Mandatory/ Optional	Single/ Multiple	Explanation	Default value	Data type	Field length	Lang. specific	l.chg. in ver.
Formula version	**FORMULA_VERSION**	Optional	Single	Detailled information on the version of the formula	-	-	-	-	2005fd
Formula name	**FORMULA_NAME**	Optional	Single	e.g., "Formula for livestocks" 2005fd: New element	-	**dtMLSTRING**	100	Yes	2005fd
Description of the formula	**FORMULA_DESCR**	Optional	Single	This element is used to describe the formula. 2005fd: New element	-	**dtMLSTRING**	250	Yes	2005fd
Formula source	**FORMULA_SOURCE**	Optional	Single	Reference to a document, standard or definition describing the formula.	-	-	-	-	2005
Additional multimedia information	**MIME_INFO**	Optional	Single	Information about multimedia files	-	-	-	-	-
Function of the formula	**FORMULA_FUNCTION**	Optional	Single	Mathematical description of the formula	-	-	-	-	2005fd
Parameter definitions	**PARAMETER_ DEFINITIONS**	Mandatory	Single	List of parameter definitions	-	-	-	-	2005fd

Example 1
A well documented example can be found in chapter **Example: metal allowances**.

Example 2
In this example the price of the specified product depends on the the delivery time. The price is structured as follows:

- normal (up to 3 days): without allowance
- short (24 hours): 50 euro allowance
- long (up to 2 weeks): 20 euro discount

The price of the product depends on a paramter which has to be entered within a (very small) configuartion by the user. Therefore the example is divided up into three parts: the definition of the formula within the global formula repository is shown below; the specification of the required configuration is described here **Example 2 for element PRODUCT_CONFIG_DETAILS**; the usage of the defined price formulas is described in **Example 2 for element PRODUCT_PRICE_DETAILS**.

Copyright © 2022 BME e.V. - BMEcat® Version 2005.2
Copyright © 2010-2021 BME e.V. - BMEcat® Version 2005.1
Copyright © 2005-2009 BME e.V. - BMEcat® Version 2005
Copyright © 1998–2004 Fraunhofer IAO, Stuttgart; Universität Essen BLI - BMEcat® Version 1.2

One option to define this priceformula is the usage of one formula with three terms (**TERM**) each with different conditions (**TERM_CONDITION**). To access the results of the configuration a paramter "DT" with the **type** "**PARAMETER_ORIGIN -->type =config**"is defined. in this case the content of the element **PARAMETER_ORIGIN** references to the identificator of the configuration step.

```
<FORMULA>
    <FORMULA_ID>33</FORMULA_ID>
    <FORMULA_NAME>Delivery speed</FORMULA_NAME>
    <FORMULA_FUNCTION>
        <TERM type="function">
            <TERM_ID>1</TERM_ID>
            <TERM_CONDITION>DT="N"</TERM_CONDITION>
            <TERM_EXPRESSION>PP</TERM_EXPRESSION>
        </TERM>
        <TERM type="function">
            <TERM_ID>2</TERM_ID>
            <TERM_CONDITION>DT="E"</TERM_CONDITION>
            <TERM_EXPRESSION>PP+50</TERM_EXPRESSION>
        </TERM>
        <TERM type="function">
            <TERM_ID>3</TERM_ID>
            <TERM_CONDITION>DT="S"</TERM_CONDITION>
            <TERM_EXPRESSION>PP-20</TERM_EXPRESSION>
        </TERM>
    </FORMULA_FUNCTION>
    <PARAMETER_DEFINITIONS>
        <PARAMETER_DEFINITION>
            <PARAMETER_SYMBOL>PP</PARAMETER_SYMBOL>
            <PARAMETER_BASICS>
                <PARAMETER_NAME>Product price</PARAMETER_NAME>
                <PARAMETER_UNIT>EUR</PARAMETER_UNIT>
            </PARAMETER_BASICS>
            <PARAMETER_ORDER>1</PARAMETER_ORDER>
        </PARAMETER_DEFINITION>
        <PARAMETER_DEFINITION>
            <PARAMETER_SYMBOL>DT</PARAMETER_SYMBOL>
            <PARAMETER_BASICS>
                <PARAMETER_NAME>Delivery time</PARAMETER_NAME>
            </PARAMETER_BASICS>
            <PARAMETER_ORIGIN type="config">S1</PARAMETER_ORIGIN>
            <PARAMETER_ORDER>2</PARAMETER_ORDER>
        </PARAMETER_DEFINITION>
    </PARAMETER_DEFINITIONS>
</FORMULA>
```

Copyright © 2022 BME e.V. - BMEcat® Version 2005.2
Copyright © 2010-2021 BME e.V. - BMEcat® Version 2005.1
Copyright © 2005-2009 BME e.V. - BMEcat® Version 2005
Copyright © 1998–2004 Fraunhofer IAO, Stuttgart; Universität Essen BLI - BMEcat® Version 1.2

Example 3
In this example the configuration information for a cable with individual length are shown. The order unit should be piece to order any amount of cables with an individual length within one order line. The cable length can be entered from 10 cm up to 1000 m in 1cm steps.

The length of the cable can be entered by the user via a configuration (see also **Example 3 for element PRODUCT_CONFIG_DETAILS**). The ID of the configuration step (**STEP_ID**) is referenced in the definition of the paramter "LENGTH" in the element **PARAMETER_ORIGIN** with the attribute "**type**" = "**config**".

```
<FORMULA>
    <FORMULA_ID>cableconf</FORMULA_ID>
    <FORMULA_NAME>Formel cable with individual length</FORMULA_NAME>
    <FORMULA_FUNCTION>
        <TERM type="function">
            <TERM_ID>1</TERM_ID>
            <TERM_EXPRESSION>KP+(PPM * LENGTH)</TERM_EXPRESSION>
        </TERM>
    </FORMULA_FUNCTION>
    <PARAMETER_DEFINITIONS>
        <PARAMETER_DEFINITION>
            <PARAMETER_SYMBOL>KP</PARAMETER_SYMBOL>
            <PARAMETER_BASICS>
                <PARAMETER_NAME>Base price</PARAMETER_NAME>
                <PARAMETER_DESCR>There is a base price for every tailor made cable</PARAMETER_DESCR>
                <PARAMETER_UNIT>EUR</PARAMETER_UNIT>
            </PARAMETER_BASICS>
            <PARAMETER_DEFAULT_VALUE>5</PARAMETER_DEFAULT_VALUE>
            <PARAMETER_ORDER>1</PARAMETER_ORDER>
        </PARAMETER_DEFINITION>
        <PARAMETER_DEFINITION>
            <PARAMETER_SYMBOL>PPM</PARAMETER_SYMBOL>
            <PARAMETER_BASICS>
                <PARAMETER_NAME>Price per meter</PARAMETER_NAME>
                <PARAMETER_UNIT>EUR/m</PARAMETER_UNIT>
            </PARAMETER_BASICS>
            <PARAMETER_ORDER>2</PARAMETER_ORDER>
        </PARAMETER_DEFINITION>
        <PARAMETER_DEFINITION>
            <PARAMETER_SYMBOL>LENGTH</PARAMETER_SYMBOL>
            <PARAMETER_BASICS>
                <PARAMETER_NAME>Cable length</PARAMETER_NAME>
                <PARAMETER_UNIT>m</PARAMETER_UNIT>
            </PARAMETER_BASICS>
            <PARAMETER_ORIGIN type="config">CL</PARAMETER_ORIGIN>
            <PARAMETER_ORDER>3</PARAMETER_ORDER>
        </PARAMETER_DEFINITION>
    </PARAMETER_DEFINITIONS>
</FORMULA>
...
```

Copyright © 2022 BME e.V. - BMEcat® Version 2005.2
Copyright © 2010-2021 BME e.V. - BMEcat® Version 2005.1
Copyright © 2005-2009 BME e.V. - BMEcat® Version 2005
Copyright © 1998–2004 Fraunhofer IAO, Stuttgart; Universität Essen BLI - BMEcat® Version 1.2

```
<PRODUCT_PRICE_DETAILS>
    <PRODUCT_PRICE price_type="net_list">
        <PRICE_FORMULA>
            <FORMULA_IDREF>cableconf</FORMULA_IDREF>
            <PARAMETERS>
                <PARAMETER>
                    <PARAMETER_SYMBOLREF>PPM</PARAMETER_SYMBOLREF>
                    <PARAMETER_VALUE>1.2</PARAMETER_VALUE>
                </PARAMETER>
            </PARAMETERS>
        </PRICE_FORMULA>
        <PRICE_CURRENCY>EUR</PRICE_CURRENCY>
        <TAX>.16</TAX>
    </PRODUCT_PRICE>
</PRODUCT_PRICE_DETAILS>
```

Example 4
This example shows how a pen is specified which a individual text can be printed on. The text is limited to 20 characters.

The length of the text is considered within the formula via the property "length" of the string.

The user can enter the printed text in a configuration (see also **Example 4 for element PRODUCT_CONFIG_DETAILS**).

```
<FORMULA>
    <FORMULA_ID>pp</FORMULA_ID>
    <FORMULA_FUNCTION>
        <TERM type="function">
            <TERM_ID>1</TERM_ID>
            <TERM_EXPRESSION>PP+(PPC * TEXT.length)</TERM_EXPRESSION>
        </TERM>
    </FORMULA_FUNCTION>
    <PARAMETER_DEFINITIONS>
        <PARAMETER_DEFINITION>
            <PARAMETER_SYMBOL>PP</PARAMETER_SYMBOL>
            <PARAMETER_BASICS>
                <PARAMETER_NAME>Print price</PARAMETER_NAME>
                <PARAMETER_UNIT>EUR</PARAMETER_UNIT>
            </PARAMETER_BASICS>
            <PARAMETER_DEFAULT_VALUE>10</PARAMETER_DEFAULT_VALUE>
            <PARAMETER_ORDER>1</PARAMETER_ORDER>
        </PARAMETER_DEFINITION>
        <PARAMETER_DEFINITION>
            <PARAMETER_SYMBOL>PPC</PARAMETER_SYMBOL>
            <PARAMETER_BASICS>
                <PARAMETER_NAME>Price per character</PARAMETER_NAME>
                <PARAMETER_UNIT>EUR/character</PARAMETER_UNIT>
            </PARAMETER_BASICS>
```

Copyright © 2022 BME e.V. - BMEcat® Version 2005.2
Copyright © 2010-2021 BME e.V. - BMEcat® Version 2005.1
Copyright © 2005-2009 BME e.V. - BMEcat® Version 2005
Copyright © 1998–2004 Fraunhofer IAO, Stuttgart; Universität Essen BLI - BMEcat® Version 1.2

```
            <PARAMETER_ORDER>2</PARAMETER_ORDER>
        </PARAMETER_DEFINITION>
        <PARAMETER_DEFINITION>
            <PARAMETER_SYMBOL>TEXT</PARAMETER_SYMBOL>
            <PARAMETER_BASICS>
                <PARAMETER_NAME>Print text</PARAMETER_NAME>
            </PARAMETER_BASICS>
            <PARAMETER_ORIGIN type="config">PTEXT</PARAMETER_ORIGIN>
            <PARAMETER_ORDER>3</PARAMETER_ORDER>
        </PARAMETER_DEFINITION>
    </PARAMETER_DEFINITIONS>
</FORMULA>
```

Copyright © 2022 BME e.V. - BMEcat® Version 2005.2
Copyright © 2010-2021 BME e.V. - BMEcat® Version 2005.1
Copyright © 2005-2009 BME e.V. - BMEcat® Version 2005
Copyright © 1998–2004 Fraunhofer IAO, Stuttgart; Universität Essen BLI - BMEcat® Version 1.2

FORMULA_VERSION

(Formula version)

This element contains detailled information on the version of the formula.

2005fd: New element

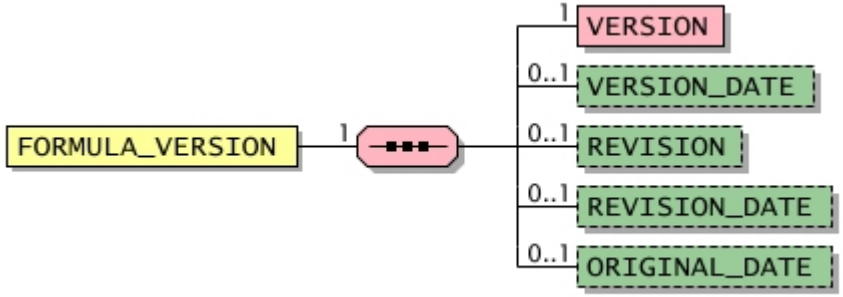

General					
Used in	Default value	Data type	Field length	Lang. specific	l.chg. in ver.
FORMULA	-	-	-	-	2005fd

Elements

Designation	Element name	Mandatory/ Optional	Single/ Multiple	Explanation	Default value	Data type	Field length	Lang. specific	l.chg. in ver.
Version	**VERSION**	Mandatory	Single	Detailled information on the version 2005fd: New element	-	**dtSTRING**	20	-	2005fd
Version date	**VERSION_DATE**	Optional	Single	Date of the given version 2005fd: New element	-	**dtDATETIME**	-	-	2005fd
Revision	**REVISION**	Optional	Single	Revision number of the given version 2005fd: New element	-	**dtSTRING**	20	-	2005fd

Copyright © 2022 BME e.V. - BMEcat® Version 2005.2
Copyright © 2010-2021 BME e.V. - BMEcat® Version 2005.1
Copyright © 2005-2009 BME e.V. - BMEcat® Version 2005
Copyright © 1998–2004 Fraunhofer IAO, Stuttgart; Universität Essen BLI - BMEcat® Version 1.2

Elements									
Designation	Element name	Mandatory/ Optional	Single/ Multiple	Explanation	Default value	Data type	Field length	Lang. specific	I.chg. in ver.
Revision date	**REVISION_DATE**	Optional	Single	Date of the latest revision 2005fd: New element	-	**dtDATETIME**	-	-	2005fd
Original date	**ORIGINAL_DATE**	Optional	Single	Date of the first version in its first revision 2005fd: New element	-	**dtDATETIME**	-	-	2005fd

Copyright © 2022 BME e.V. - BMEcat® Version 2005.2
Copyright © 2010-2021 BME e.V. - BMEcat® Version 2005.1
Copyright © 2005-2009 BME e.V. - BMEcat® Version 2005
Copyright © 1998–2004 Fraunhofer IAO, Stuttgart; Universität Essen BLI - BMEcat® Version 1.2

FORMULA_SOURCE

(Formula source)

This element contains a reference to a document, standard or definition describing the formula.

2005fd: New element
2005: The sub-element **SOURCE_DESCR** was renamed to **SOURCE_NAME**.

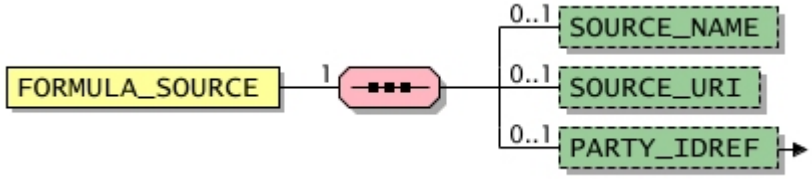

General					
Used in	Default value	Data type	Field length	Lang. specific	l.chg. in ver.
FORMULA	-	-	-	-	2005

Elements

Designation	Element name	Mandatory/ Optional	Single/ Multiple	Explanation	Default value	Data type	Field length	Lang. specific	l.chg. in ver.
Source description	**SOURCE_NAME**	Optional	Single	Description of the source, e.g., the name of the document or standard 2005fd: New element 2005: This element was named **SOURCE_DESCR** in Version 2005 final draft, now it is named **SOURCE_NAME**. The maximum length has been reduced from 250 characters to 80 characters.	-	**dtMLSTRING**	80	Yes	2005
URI of the source	**SOURCE_URI**	Optional	Single	URI of the source, e.g., pointing to the document or standard 2005fd: New element	-	**dtSTRING**	255	-	2005fd
Reference to a business partner	**PARTY_IDREF - type**	Optional	Single	Reference to a business partner. It contains the unique identifier (**PARTY_ID**) of the respective party (element **PARTY**).	-	**dtSTRING**	250	-	2005fd

Copyright © 2022 BME e.V. - BMEcat® Version 2005.2
Copyright © 2010-2021 BME e.V. - BMEcat® Version 2005.1
Copyright © 2005-2009 BME e.V. - BMEcat® Version 2005
Copyright © 1998–2004 Fraunhofer IAO, Stuttgart; Universität Essen BLI - BMEcat® Version 1.2

Copyright © 2022 BME e.V. - BMEcat® Version 2005.2
Copyright © 2010-2021 BME e.V. - BMEcat® Version 2005.1
Copyright © 2005-2009 BME e.V. - BMEcat® Version 2005
Copyright © 1998–2004 Fraunhofer IAO, Stuttgart; Universität Essen BLI - BMEcat® Version 1.2

FORMULA_FUNCTION

(Function of the formula)

This element describes the formula in a technical way. Therefore the formula expression can be mathematically evaluated.

2005fd: New element

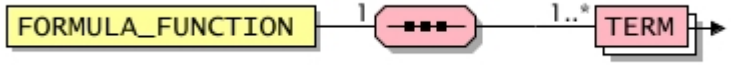

General					
Used in	Default value	Data type	Field length	Lang. specific	l.chg. in ver.
FORMULA	-	-	-	-	2005fd

Elements									
Designation	Element name	Mandatory/ Optional	Single/ Multiple	Explanation	Default value	Data type	Field length	Lang. specific	l.chg. in ver.
Term	**TERM** **- type**	Mandatory	Multiple	Term for calculating values or for restricting configurations	-	-	-	-	2005fd

Example 1
In the following example the weight of a wood plate is calculated (overallweight = length * width * 0.3). With the parameters O, L and W the function of the formula looks like this:

```
<FORMULA_FUNCTION>
    <TERM type="function">
        <TERM_ID>PLATE1</TERM_ID>
        <TERM_EXPRESSION>O = L * W * 0.3</TERM_EXPRESSION>
    </TERM>
</FORMULA_FUNCTION>
```

Example 2
In the following example the delivery time of the product depends on the selected alternative. With the parameters DURATION and STEP1, which refers to the CONFIG_STEP for selecting the alternative, the function of the formula looks like this:

```
<FORMULA_FUNCTION>
    <TERM type="function">
        <TERM_ID>TERM1</TERM_ID>
```

Copyright © 2022 BME e.V. - BMEcat® Version 2005.2
Copyright © 2010-2021 BME e.V. - BMEcat® Version 2005.1
Copyright © 2005-2009 BME e.V. - BMEcat® Version 2005
Copyright © 1998–2004 Fraunhofer IAO, Stuttgart; Universität Essen BLI - BMEcat® Version 1.2

```
        <TERM_CONDITION>STEP1 = "A1"</TERM_CONDITION>
        <TERM_EXPRESSION>DURATION = 4</TERM_EXPRESSION>
    </TERM>
    <TERM type="function">
        <TERM_ID>TERM2</TERM_ID>
        <TERM_CONDITION>STEP1 = "A2"</TERM_CONDITION>
        <TERM_EXPRESSION>DURATION = 10</TERM_EXPRESSION>
    </TERM>
    <TERM type="function">
        <TERM_ID>TERM3</TERM_ID>
        <TERM_CONDITION>STEP1 = "A3"</TERM_CONDITION>
        <TERM_EXPRESSION>DURATION = 14</TERM_EXPRESSION>
    </TERM>
</FORMULA_FUNCTION>
```

Copyright © 2022 BME e.V. - BMEcat® Version 2005.2
Copyright © 2010-2021 BME e.V. - BMEcat® Version 2005.1
Copyright © 2005-2009 BME e.V. - BMEcat® Version 2005
Copyright © 1998–2004 Fraunhofer IAO, Stuttgart; Universität Essen BLI - BMEcat® Version 1.2

TERM

(Term)

This element specifies a term for calculating values or for restricting configurations. Which of this two function the term serves depends on the content of the attribute "**type**".

2005fd: New element

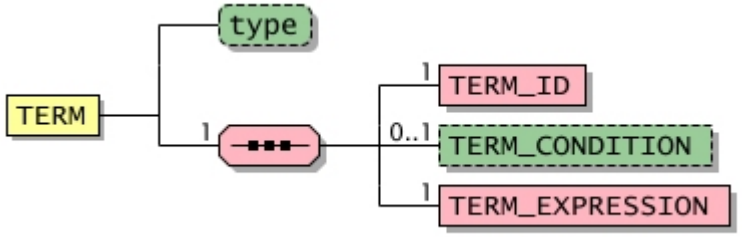

General					
Used in	Default value	Data type	Field length	Lang. specific	I.chg. in ver.
CONFIG_RULES, **FORMULA_FUNCTION**	-	-	-	-	2005fd

Attributes								
Designation	Attribute name	Mandatory/ optional	Explanation	Default value	Data type	Field length	Lang. specific	I.chg. in ver.
Term type	type	Optional	This attribute specifies the purpose of the term. See also: **Permitted values for attribute "type"**	function	**dtSTRING**	20	-	2005fd

Permitted values for attribute "type"			
Designation	Attribute value	Explanation	I.chg. in ver.
Calculation	**function**	The term contains a formula to calculate a value.	2005fd
Constraint	constraint	The term is used to restrict valid configurations.	2005fd

Copyright © 2022 BME e.V. - BMEcat® Version 2005.2
Copyright © 2010-2021 BME e.V. - BMEcat® Version 2005.1
Copyright © 2005-2009 BME e.V. - BMEcat® Version 2005
Copyright © 1998–2004 Fraunhofer IAO, Stuttgart; Universität Essen BLI - BMEcat® Version 1.2

Elements

Designation	Element name	Mandatory/ Optional	Single/ Multiple	Explanation	Default value	Data type	Field length	Lang. specific	l.chg. in ver.
Identification of the term	**TERM_ID**	Mandatory	Single	Unique identifier of the term. 2005fd: New element	-	**dtSTRING**	20	-	2005fd
Condition	**TERM_CONDITION**	Optional	Single	This element contains the condition of the term (e.g. "M1='red' and not(M2>5)"). The meaning of the element depends on the type of the term (**TERM -->type**). In calculation terms (**TERM -->type =function**) the element **TERM_CONDITION** is used to indicate if the expression of the term (**TERM_EXPRESSION**) should be calculated. Normally in these cases there are different terms (**TERM**) with diverse condition (**TERM_CONDITION**) and diverse expressions (**TERM_EXPRESSION**) (see also **Example for price formulas** and **Examples for configuration rules**). If the term is used to express a constraint to specify valid configurations a term is valid if the result of the evaluation of the **TERM_CONDITION** equals the evaluation of **TERM_EXPRESSION**. If all configuartion terms are valid the whole configuration is valid (see also **Examples for configuration rules**. This means that in case of configurations the meaning of the content of the **TERM_CONDITION** depends on the value of the **TERM_EXPRESSION**. Is the valuer "true" the **TERM_CONDITION** specifies the conditions for a valid product. Is the value "false" the element **TERM_CONDITION** specifies situation which are not allowed for valid products. The language to define the conditions is defined close to terms from the language javascript (see also **http://web.archive.org/web/20040211195031/http://devedge.netscape.com/library/manuals/2000/javascript/1.5/guide/**). The content of the condition has to be evaluated to a logical value ("true" oder "false"). 2005fd: New element	-	**dtSTRING**	3000	-	2005fd
Expression	**TERM_EXPRESSION**	Mandatory	Single	This element is used to specify an expression. This expression consists of parameter symbols, mathematical functions, operands and numbers. Conditionals, loops or funftion definitions are not allowed. In the context of a calculation term (**TERM -->type =function**) the expression has to be calculated either if the content of the element **TERM_CONDITION** evaluates to a true result or if the element **TERM_CONDITION** is absent. In this case the element **TERM_EXPRESSION** contains a funktion like P = A * B (see also **Examples to price formulas** and **Examples to configuration rules**). If the term is used to constrict valid configurations (**TERM -->type =constraint**) within configuration rules the element **TERM_EXPRESSION** contains always either "true" or "false" (see also **CONFIG_RULES**).	-	**dtSTRING**	3000	-	2005fd

Copyright © 2022 BME e.V. - BMEcat® Version 2005.2
Copyright © 2010-2021 BME e.V. - BMEcat® Version 2005.1
Copyright © 2005-2009 BME e.V. - BMEcat® Version 2005
Copyright © 1998–2004 Fraunhofer IAO, Stuttgart; Universität Essen BLI - BMEcat® Version 1.2

Elements									
Designation	Element name	Mandatory/ Optional	Single/ Multiple	Explanation	Default value	Data type	Field length	Lang. specific	l.chg. in ver.
				The language to define the expressions is defined close to terms from the language javascript (see also **http://web.archive.org/web/20040211195031/http://devedge.netscape.com/library/manuals/2000/javascript/1.5/guide/**). 2005fd: New element					

Copyright © 2022 BME e.V. - BMEcat® Version 2005.2
Copyright © 2010-2021 BME e.V. - BMEcat® Version 2005.1
Copyright © 2005-2009 BME e.V. - BMEcat® Version 2005
Copyright © 1998–2004 Fraunhofer IAO, Stuttgart; Universität Essen BLI - BMEcat® Version 1.2

PARAMETER_DEFINITIONS

(Parameter definitions)

This element contains a list of definitions of parameters, which can be used in formulas.

2005fd: New element

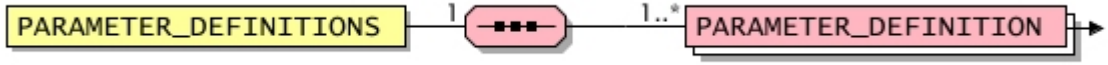

General					
Used in	Default value	Data type	Field length	Lang. specific	l.chg. in ver.
FORMULA	-	-	-	-	2005fd

Elements									
Designation	Element name	Mandatory/ Optional	Single/ Multiple	Explanation	Default value	Data type	Field length	Lang. specific	l.chg. in ver.
Parameter definition	**PARAMETER_ DEFINITION**	Mandatory	Multiple	Definition of the parameter in the document header	-	-	-	-	2005

Copyright © 2022 BME e.V. - BMEcat® Version 2005.2
Copyright © 2010-2021 BME e.V. - BMEcat® Version 2005.1
Copyright © 2005-2009 BME e.V. - BMEcat® Version 2005
Copyright © 1998–2004 Fraunhofer IAO, Stuttgart; Universität Essen BLI - BMEcat® Version 1.2

PARAMETER_DEFINITION

(Parameter definition)

This element defines the parameter in the document header.

Referencing this parameter and setting a product-specific value takes place on the product level by the **PARAMETERS** element.

Besides using the parameters to calculate the formula, the paramters could also be displayed as a list in the target system. Often this allready enables the buyer to evaluate the price.

2005fd: New element
2005: The sub-element **CLASSIFICATION_FEATURE_REF** was renamed to **FREF**.

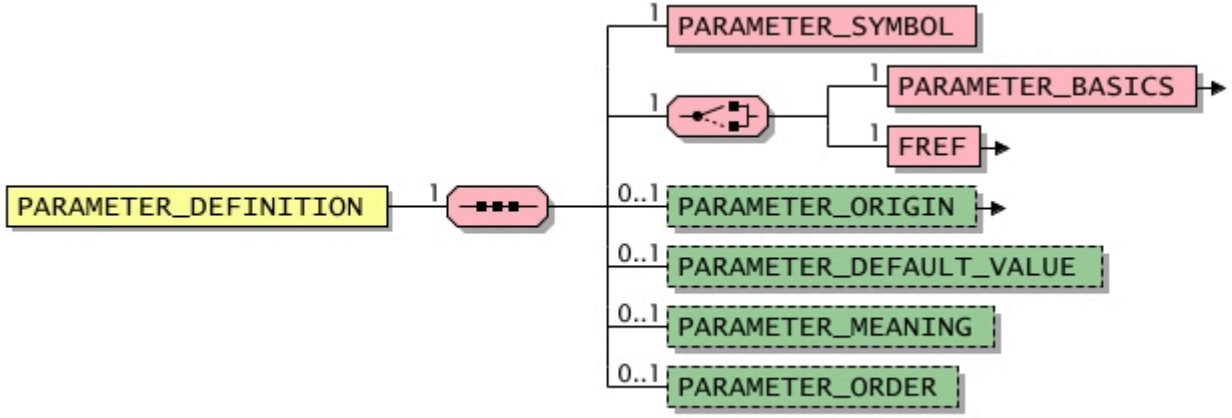

General					
Used in	Default value	Data type	Field length	Lang. specific	l.chg. in ver.
PARAMETER_DEFINITIONS	-	-	-	-	2005

Elements									
Designation	Element name	Mandatory/ Optional	Single/ Multiple	Explanation	Default value	Data type	Field length	Lang. specific	l.chg. in ver.
Parameter symbol	**PARAMETER_SYMBOL**	Mandatory	Single	This element contains the parameter symbol. The symbol can be used in formulas where its represents the parameter. In addition, the symbol can be used on the product level for setting product-specific parameter values.	-	**dtSTRING**	60	-	2005fd

Copyright © 2022 BME e.V. - BMEcat® Version 2005.2
Copyright © 2010-2021 BME e.V. - BMEcat® Version 2005.1
Copyright © 2005-2009 BME e.V. - BMEcat® Version 2005
Copyright © 1998–2004 Fraunhofer IAO, Stuttgart; Universität Essen BLI - BMEcat® Version 1.2

Elements

Designation	Element name	Mandatory/ Optional	Single/ Multiple	Explanation	Default value	Data type	Field length	Lang. specific	l.chg. in ver.
				 The symbol must start with a character followed by a combination of characters and numbers. Country-specific characters, i.e. vowels, are not allowed. 2005fd: New element					
Basic parameter information	**PARAMETER_BASICS**	Mandatory	Single	Basic information on the paraemter; it is not necessary, if the parameter has been derived from a property of a classification system (then, it is described there) 	-	-	-	-	2005fd
Reference to a feature	**FREF**	Mandatory	Single	Reference to a feature which is defined in a classification system 	-	-	-	-	2005
Parameter origin	**PARAMETER_ORIGIN - type**	Optional	Single	This element determines the origin of the parameter. 	-	**dtMLSTRING**	6000	Yes	2005fd
Default value of the parameter	**PARAMETER_ DEFAULT_VALUE**	Optional	Single	This element sets a default value for the parameter. The parameter can be changed on the product level by the **PARAMETER_VALUE** element. 2005fd: New element	-	**dtSTRING**	250	-	2005fd
Parameter type	**PARAMETER_MEANING**	Optional	Single	Marks the meaning of the parameter 2005fd: New element See also: **Permitted values for element PARAMETER_MEANING**	-	**dtSTRING**	20	-	2005fd
Parameter order	**PARAMETER_ORDER**	Optional	Single	Order (sequence) in which the parameter is listed in target system When parameters are listed they are always represented in ascending order (the first parameter is the one with the lowest number). 2005fd: New element	-	**dtINTEGER**	-	-	2005fd

Copyright © 2022 BME e.V. - BMEcat® Version 2005.2
Copyright © 2010-2021 BME e.V. - BMEcat® Version 2005.1
Copyright © 2005-2009 BME e.V. - BMEcat® Version 2005
Copyright © 1998–2004 Fraunhofer IAO, Stuttgart; Universität Essen BLI - BMEcat® Version 1.2

Permitted values for element PARAMETER_MEANING			
Designation	Element value	Explanation	l.chg. in ver.
Allowance or charge	allow_or_charge	The parameter contains an allowance or charge.	2005fd
Tax rate	tax	The parameter contains a tax rate.	2005fd

Copyright © 2022 BME e.V. - BMEcat® Version 2005.2
Copyright © 2010-2021 BME e.V. - BMEcat® Version 2005.1
Copyright © 2005-2009 BME e.V. - BMEcat® Version 2005
Copyright © 1998–2004 Fraunhofer IAO, Stuttgart; Universität Essen BLI - BMEcat® Version 1.2

PARAMETER_BASICS

(Basic parameter information)

This element provides basic information on the paraemter; it is not necessary, if the parameter has been derived from a property of a classification system (then, it is described there)

2005fd: New element

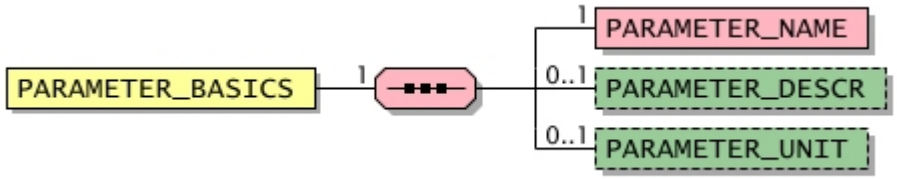

General					
Used in	Default value	Data type	Field length	Lang. specific	l.chg. in ver.
PARAMETER_DEFINITION	-	-	-	-	2005fd

Elements									
Designation	Element name	Mandatory/ Optional	Single/ Multiple	Explanation	Default value	Data type	Field length	Lang. specific	l.chg. in ver.
Parameter name	**PARAMETER_NAME**	Mandatory	Single	Name of the parameter. The name is shown in the GUI when listing the values for a product, e.g., Metal weight: 0.5 kg 2005fd: New element	-	**dtMLSTRING**	100	Yes	2005fd
Parameter description	**PARAMETER_DESCR**	Optional	Single	This element is used to describe the parameter. 2005fd: New element	-	**dtMLSTRING**	250	Yes	2005fd
Parameter unit	**PARAMETER_UNIT**	Optional	Single	Unit of measurement of the parameter. The unit is shown in the GUI when listing the values for a product, e.g., Metal weight: 0.5 kg 2005fd: New element 2005: The maximum length has been reduced from 600 characters to 60 characters.	-	**dtMLSTRING**	60	Yes	2005

Copyright © 2022 BME e.V. - BMEcat® Version 2005.2
Copyright © 2010-2021 BME e.V. - BMEcat® Version 2005.1
Copyright © 2005-2009 BME e.V. - BMEcat® Version 2005
Copyright © 1998–2004 Fraunhofer IAO, Stuttgart; Universität Essen BLI - BMEcat® Version 1.2

FREF

(Reference to a feature)

This element contains a reference to a feature, which is defined in a classification system.

2005fd: New element
2005: This element was named **CLASSIFICATION_FEATURE_REF** in BMEcat 2005 final draft, now it is named **FREF**.

General					
Used in	Default value	Data type	Field length	Lang. specific	l.chg. in ver.
CONFIG_FEATURE, **PARAMETER_DEFINITION**	-	-	-	-	2005

Elements									
Designation	Element name	Mandatory/ Optional	Single/ Multiple	Explanation	Default value	Data type	Field length	Lang. specific	l.chg. in ver.
Classification or feature system	**REFERENCE_ FEATURE_SYSTEM_ NAME**	Mandatory	Single	Name of the referenced classification or feature system If the classification system is transferred by the **T_NEW_CATALOG** transaction and its **CLASSIFICATION_SYSTEM** element, the value of this element must be equal with the name defined in **CLASSIFICATION_SYSTEM_NAME**. Remark: The format for the name (**CLASSIFICATION_SYSTEM_NAME**) should comply with the following structure: "<Name>-<Major Version>.<Minor Version> See also: **Predefined values for element REFERENCE_FEATURE_SYSTEM_NAME** **Examples** ECLASS-4.1, UNSPSC-6.0801 `<REFERENCE_FEATURE_SYSTEM_NAME>ECLASS-4.1 </REFERENCE_FEATURE_SYSTEM_NAME>`	-	**dtSTRING**	80	-	-
Feature reference	**FT_IDREF**	Mandatory	Single	Reference to the unique ID of a feature (see**CLASSIFICATION_SYSTEM_FEATURE_ TEMPLATE**)	-	**dtSTRING**	60	-	-

Copyright © 2022 BME e.V. - BMEcat® Version 2005.2
Copyright © 2010-2021 BME e.V. - BMEcat® Version 2005.1
Copyright © 2005-2009 BME e.V. - BMEcat® Version 2005
Copyright © 1998–2004 Fraunhofer IAO, Stuttgart; Universität Essen BLI - BMEcat® Version 1.2

Predefined values for element REFERENCE_FEATURE_SYSTEM_NAME			
Designation	Element value	Explanation	l.chg. in ver.
CPV	CPV-yyyy-mm-dd	Reference to the classification system CPV (Common Procurement Vocabulary) with version date (e.g., CPV-2003-12-16); see siehe **http://simap.eu.int**	2005fd
eCl@ss	ECLASS-x.y	Reference to the classification system eCl@ss with major version x and minor version y (e.g., ECLASS-5.1); see **http://www.eclass-online.com**	-
eOTD	EOTD-yyyy-mm-dd	Reference to the classification system eOTD (ECCMA Open Technical Dictionary) with version date (e.g., EOTD-2004-08-01); see **http://www.eccma.org**	2005fd
ETIM	ETIM-x.y	Reference to the classification system ETIM with major version x and minor version y (e.g., ETIM-2.0); see **http://www.etim.de**	-
GPC	GPC-x.y	Reference to the classification system EAN.UCC GPC (Global Product Classification) with major version x and minor version y (e.g., GPC-4.0); see **http://www.gs1.org**	2005fd
profiCl@ss	PROFICLASS-x.y	Reference to the classification system profiCl@ss with major version x and minor version y (e.g., PROFICLASS-2.1); see **http://www.proficlass.de**	2005fd
RNTD	RNTD-x.y	Reference to the classification system RNTD (RosettaNet Technical Dictionary) with major version x and minor version y (e.g., RNTD-4.0); see **http://www.rosettanet.org**	2005fd
RUS	RUS-x.y	Reference to the classification system RUS (Requisite Unifying Structure) with major version x and minor version y (e.g., RUS-4.0); see **http://rusportal.requisite.com**	2005fd
UNSPSC	UNSPSC-x.yyyy	Reference to the classification system UNSPSC with major version x and minor version y (e.g., UNSPSC-6.0801); see **http://www.unspsc.org**	-
Proprietary classification system	udf_NAME-x.y	Reference to a proprietary (non-standard) classification system. The value has to start with 'udf_' followed by the classification system name in capital letters, hyphen, and version (major version x and minor version y). For example: udf_MYSYSTEM-3.0. The length of the name is limited to 72 characters; the version to 7 characters.	-
Other classification system	User defined value, format: [\w\-\.]{1,80}	Other standard classification system, which is not pre-defined in BMEcat, can be described in a similar way: The name of the system in capital, followed by a hyphen and the version information. For instance, NAME-3.4. The length of the name is limited to 72 characters. The version information, where major and minor version are separated by a dot, is limited to 7 characters.	2005fd

Copyright © 2022 BME e.V. - BMEcat® Version 2005.2
Copyright © 2010-2021 BME e.V. - BMEcat® Version 2005.1
Copyright © 2005-2009 BME e.V. - BMEcat® Version 2005
Copyright © 1998–2004 Fraunhofer IAO, Stuttgart; Universität Essen BLI - BMEcat® Version 1.2

PARAMETER_ORIGIN

(Parameter origin)

This element determines the origin of the parameter. If the parameter value is given in a **PARAMETER_DEFAULT_VALUE** or **PARAMETER_VALUE** element, this element is not permitted.

The content of this element depends on the content of the attribute '**type**'. The element is language-dependent in order to enable language-specific URISs, if the attribute has the value "uri".

2005fd: New element

General					
Used in	Default value	Data type	Field length	Lang. specific	l.chg. in ver.
PARAMETER_DEFINITION	-	**dtMLSTRING**	6000	Yes	2005fd

Attributes								
Designation	Attribute name	Mandatory/ optional	Explanation	Default value	Data type	Field length	Lang. specific	l.chg. in ver.
Origin type	type	Mandatory	This attribute determines the source of the parameter value. See also: **Permitted values for attribute "type"**	-	**dtSTRING**	20	-	2005fd

Permitted values for attribute "type"			
Designation	Attribute value	Explanation	l.chg. in ver.
User input	config	The value is provided by the user during the product configuration. In this case, the **PARAMETER_ORIGIN** element must contain the identifier of the respective configuration step (**STEP_ID**).	2005fd
Formula	formula	The value is the result of another formula. In this case, the **PARAMETER_ORIGIN** element must contain the identifier of the respective formula (**FORMULA_ID**).	2005fd
Value from URI	uri	The value is requested online from the a URI. In this case, the **PARAMETER_ORIGIN** element must contain the identifier of the respective URI.	2005fd

Copyright © 2022 BME e.V. - BMEcat® Version 2005.2
Copyright © 2010-2021 BME e.V. - BMEcat® Version 2005.1
Copyright © 2005-2009 BME e.V. - BMEcat® Version 2005
Copyright © 1998–2004 Fraunhofer IAO, Stuttgart; Universität Essen BLI - BMEcat® Version 1.2

Permitted values for attribute "type"			
Designation	Attribute value	Explanation	l.chg. in ver.
		If the internet connection is broken, the target system may determine the parameter value by other means, i.e. user input or local data source.	
XPATH	xpath	The value is referenced by a XPATH expression. In this case, the **PARAMETER_ORIGIN** element must contain the respective XPATH expression. Elements and its values within the BMEcat catalog documents can be referenced by these expressions (see also **http://www.w3.org/TR/xpath**). The starting element for XPATH is the **PRODUCT** element of the respective product (for which the formula is used). **Example 1** A XPATH expression for referencing the **INTERNATIONAL_PID** element looks like this: `<PARAMETER_ORIGIN>PRODUCT_DETAILS/INTERNATIONAL_PID|@type='ean'|</PARAMETER_ORIGIN>`. **Example 2** A reference to a product feature is made by its ID (**FT_IDREF**) or its name (**FNAME**): `<PARAMETER_ORIGIN>PRODUCT_FEATURES/FEATURE|FT_IDREF='a12120'|/FVALUE</PARAMETER_ORIGIN>`.	2005fd

Copyright © 2022 BME e.V. - BMEcat® Version 2005.2
Copyright © 2010-2021 BME e.V. - BMEcat® Version 2005.1
Copyright © 2005-2009 BME e.V. - BMEcat® Version 2005
Copyright © 1998–2004 Fraunhofer IAO, Stuttgart; Universität Essen BLI - BMEcat® Version 1.2

IPP_DEFINITIONS

(IPP applications of the catalog)

This element holds definitions of IPP applications that are supported by the catalog.For that purpose each IPP application has to be defined in detail.

2005fd: New element

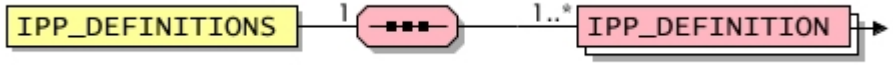

General					
Used in	Default value	Data type	Field length	Lang. specific	l.chg. in ver.
T_NEW_CATALOG	-	-	-	-	2005fd

Elements									
Designation	Element name	Mandatory/ Optional	Single/ Multiple	Explanation	Default value	Data type	Field length	Lang. specific	l.chg. in ver.
IPP definition	IPP_DEFINITION	Mandatory	Multiple	Definition of an IPP	-	-	-	-	2005fd

Copyright © 2022 BME e.V. - BMEcat® Version 2005.2
Copyright © 2010-2021 BME e.V. - BMEcat® Version 2005.1
Copyright © 2005-2009 BME e.V. - BMEcat® Version 2005
Copyright © 1998–2004 Fraunhofer IAO, Stuttgart; Universität Essen BLI - BMEcat® Version 1.2

IPP_DEFINITION

(IPP definition)

This element defines an IPP.

2005fd: New element

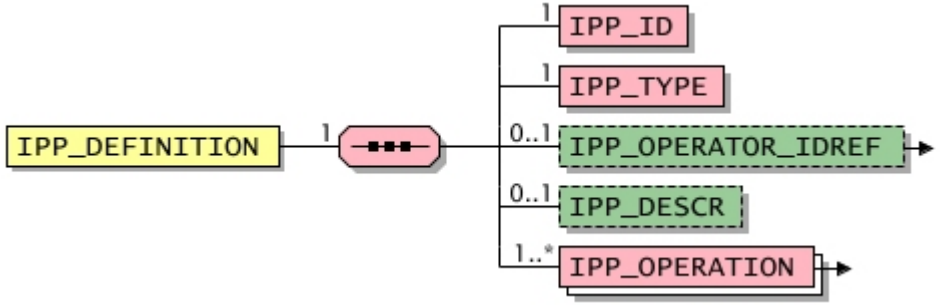

General					
Used in	Default value	Data type	Field length	Lang. specific	l.chg. in ver.
IPP_DEFINITIONS	-	-	-	-	2005fd

Elements									
Designation	Element name	Mandatory/ Optional	Single/ Multiple	Explanation	Default value	Data type	Field length	Lang. specific	l.chg. in ver.
IPP application ID	**IPP_ID**	Mandatory	Single	Unique identifier of the IPP application 2005fd: New element	-	**dtSTRING**	60	-	2005fd
IPP application	**IPP_TYPE**	Mandatory	Single	This element determines the IPP application, e.g., external catalog, price request. 2005fd: New element See also: **Permitted values for element IPP_TYPE**	-	**dtSTRING**	20	-	2005fd
Reference to IPP provider	**IPP_OPERATOR_IDREF - type**	Optional	Single	Reference to the IPP provider. It contains the unique identifier (**PARTY_ID**) of the respective party that is defined in the document.	-	**dtSTRING**	250	-	2005fd

Copyright © 2022 BME e.V. - BMEcat® Version 2005.2
Copyright © 2010-2021 BME e.V. - BMEcat® Version 2005.1
Copyright © 2005-2009 BME e.V. - BMEcat® Version 2005
Copyright © 1998–2004 Fraunhofer IAO, Stuttgart; Universität Essen BLI - BMEcat® Version 1.2

Elements									
Designation	Element name	Mandatory/ Optional	Single/ Multiple	Explanation	Default value	Data type	Field length	Lang. specific	l.chg. in ver.
				*					
Description of the IPP application	**IPP_DESCR**	Optional	Single	This element is used to describe the IPP application (e.g., "Configurator for Office Chairs").	-	**dtMLSTRING**	250	Yes	2005fd
IPP operation	**IPP_OPERATION**	Mandatory	Multiple	Specification of an IPP operation supported by the respective IPP *	-	-	-	-	2005fd

Permitted values for element IPP_TYPE			
Designation	Element value	Explanation	l.chg. in ver.
Availability request	availability_request	This IPP application starts a **request for availability information**.	2005fd
External catalog	external_catalog	This IPP application starts an **external catalog**.	2005fd
Price request	price_request	This IPP application starts a **request for price information**.	2005fd
Product request	product_request	This IPP application starts a **request for product information** and validation respectively.	2005fd
Request for quotation	rfq	This IPP application starts a **request for quotation**.	2005fd

Example "external catalog"

In the subsequent example an IPP application "external catalog" is defined with the following charcteristics: it decribes an office chair cofigurator which can be started via the 'show' operation; call and return are realized with the format OCI 4.0; one of two possible languages has to be selected; the prices shown in the configurator are net customer end prices in euro; when calling the catalog the login name has to be transferred; finally the IPP requires the transfer of a user-defined parameter, which extends the OCI format.

```
<IPP_DEFINITION>
    <IPP_ID>1</IPP_ID>
    <IPP_TYPE>external_catalog</IPP_TYPE>
    <IPP_DESCR>Office Chair Configurator</IPP_DESCR>
    <IPP_OPERATION>
        <IPP_OPERATION_ID>1</IPP_OPERATION_ID>
        <IPP_OPERATION_TYPE>show</IPP_OPERATION_TYPE>
        <IPP_OUTBOUND>
            <IPP_OUTBOUND_FORMAT>OCI-4.0</IPP_OUTBOUND_FORMAT>
            <IPP_OUTBOUND_PARAMS>
                <IPP_LANGUAGES occurence="mandatory">
                    <LANGUAGE>deu</LANGUAGE>
                    <LANGUAGE>eng</LANGUAGE>
                </IPP_LANGUAGES>
                <IPP_PRICE_CURRENCIES occurence="optional">
```

Copyright © 2022 BME e.V. - BMEcat® Version 2005.2
Copyright © 2010-2021 BME e.V. - BMEcat® Version 2005.1
Copyright © 2005-2009 BME e.V. - BMEcat® Version 2005
Copyright © 1998–2004 Fraunhofer IAO, Stuttgart; Universität Essen BLI - BMEcat® Version 1.2

```
                <PRICE_CURRENCY>EUR</PRICE_CURRENCY>
            </IPP_PRICE_CURRENCIES>
            <IPP_PRICE_TYPES>
                <PRICE_TYPE>net_customer</PRICE_TYPE>
            </IPP_PRICE_TYPES>
            <IPP_AUTHENTIFICATION_INFO>
                <AUTHENTIFICATION>
                    <LOGIN>EXTERNAL834646</LOGIN>
                </AUTHENTIFICATION>
            </IPP_AUTHENTIFICATION_INFO>
            <IPP_PARAM_DEFINITION occurence="mandatory">
                <IPP_PARAM_NAME>JOBSHOP</IPP_PARAM_NAME>
                <IPP_PARAM_DESCR>customer job-shop</IPP_PARAM_DESCR>
            </IPP_PARAM_DEFINITION>
        </IPP_OUTBOUND_PARAMS>
        <IPP_URI>https://config.mymarket.com</IPP_URI>
    </IPP_OUTBOUND>
    <IPP_INBOUND>
        <IPP_INBOUND_FORMAT>OCI-4.0</IPP_INBOUND_FORMAT>
    </IPP_INBOUND>
</IPP_OPERATION>
</IPP_DEFINITION>
```

Example "price request"

In the subsequent example an IPP application "price request" is defined with the following charcteristics:call and return are realized with the format OCI 4.0; one of three possible currencies has to be selected; net customer or net list prices can be returned (must be specified during the call); during the call the specified login name has to be used; the return of the requested price information is carried out in a garantied response time of 15 seconds at most.

```
<IPP_DEFINITION>
    <IPP_ID>8</IPP_ID>
    <IPP_TYPE>price_request</IPP_TYPE>
    <IPP_DESCR>Realtime Prices</IPP_DESCR>
    <IPP_OPERATION>
        <IPP_OPERATION_ID>1</IPP_OPERATION_ID>
        <IPP_OPERATION_TYPE>process</IPP_OPERATION_TYPE>
        <IPP_OUTBOUND>
            <IPP_OUTBOUND_FORMAT>OCI-4.0</IPP_OUTBOUND_FORMAT>
            <IPP_OUTBOUND_PARAMS>
                <IPP_PRICE_CURRENCIES occurence="mandatory">
                    <PRICE_CURRENCY>EUR</PRICE_CURRENCY>
                    <PRICE_CURRENCY>GBP</PRICE_CURRENCY>
                    <PRICE_CURRENCY>USD</PRICE_CURRENCY>
                </IPP_PRICE_CURRENCIES>
                <IPP_PRICE_TYPES occurence="mandatory">
                    <PRICE_TYPE>net_customer</PRICE_TYPE>
                    <PRICE_TYPE>net_list</PRICE_TYPE>
                </IPP_PRICE_TYPES>
```

Copyright © 2022 BME e.V. - BMEcat® Version 2005.2
Copyright © 2010-2021 BME e.V. - BMEcat® Version 2005.1
Copyright © 2005-2009 BME e.V. - BMEcat® Version 2005
Copyright © 1998–2004 Fraunhofer IAO, Stuttgart; Universität Essen BLI - BMEcat® Version 1.2

```
            <IPP_AUTHENTIFICATION_INFO>
                <AUTHENTIFICATION>
                    <LOGIN>EXTERNAL834646</LOGIN>
                </AUTHENTIFICATION>
            </IPP_AUTHENTIFICATION_INFO>
        </IPP_OUTBOUND_PARAMS>
        <IPP_URI>https://pricing.mymarket.com</IPP_URI>
    </IPP_OUTBOUND>
    <IPP_INBOUND>
        <IPP_INBOUND_FORMAT>OCI-4.0</IPP_INBOUND_FORMAT>
        <IPP_RESPONSE_TIME>PT15S</IPP_RESPONSE_TIME>
    </IPP_INBOUND>
</IPP_OPERATION>
</IPP_DEFINITION>
```

Example "request for quotation"

In the subsequent example an IPP application "request for quotation" is defined with the following charcteristics:return is realized with the format openTRANS 1.0; the one of three possible currencies has to be selected; net customer or net list prices can be returned (must be specified during the call); during the call the specified login name has to be used; the return of the requested price information is carried out in a garantied response time of 15 seconds at most.

```
<IPP_DEFINITION>
    <IPP_ID>31</IPP_ID>
    <IPP_TYPE>rfq</IPP_TYPE>
    <IPP_DESCR>Get quotations here, 24/7!</IPP_DESCR>
    <IPP_OPERATION>
        <IPP_OPERATION_ID>1</IPP_OPERATION_ID>
        <IPP_OPERATION_TYPE>process</IPP_OPERATION_TYPE>
        <IPP_OUTBOUND>
            <IPP_OUTBOUND_FORMAT>OPENTRANS-1.0</IPP_OUTBOUND_FORMAT>
            <IPP_OUTBOUND_PARAMS>
                <IPP_LANGUAGES occurence="mandatory">
                    <LANGUAGE>deu</LANGUAGE>
                    <LANGUAGE>eng</LANGUAGE>
                </IPP_LANGUAGES>
                <IPP_PRICE_CURRENCIES occurence="mandatory">
                    <PRICE_CURRENCY>EUR</PRICE_CURRENCY>
                    <PRICE_CURRENCY>GBP</PRICE_CURRENCY>
                    <PRICE_CURRENCY>USD</PRICE_CURRENCY>
                </IPP_PRICE_CURRENCIES>
                <IPP_AUTHENTIFICATION_INFO>
                    <AUTHENTIFICATION>
                        <LOGIN>EXTERNAL834646</LOGIN>
                    </AUTHENTIFICATION>
                </IPP_AUTHENTIFICATION_INFO>
            </IPP_OUTBOUND_PARAMS>
            <IPP_URI>https://quoting.mymarket.com</IPP_URI>
        </IPP_OUTBOUND>
```

Copyright © 2022 BME e.V. - BMEcat® Version 2005.2
Copyright © 2010-2021 BME e.V. - BMEcat® Version 2005.1
Copyright © 2005-2009 BME e.V. - BMEcat® Version 2005
Copyright © 1998–2004 Fraunhofer IAO, Stuttgart; Universität Essen BLI - BMEcat® Version 1.2

```
        <IPP_INBOUND>
            <IPP_INBOUND_FORMAT>OPENTRANS-1.0</IPP_INBOUND_FORMAT>
            <IPP_RESPONSE_TIME>P10D</IPP_RESPONSE_TIME>
        </IPP_INBOUND>
        <IPP_INBOUND>
            <IPP_INBOUND_FORMAT>fax</IPP_INBOUND_FORMAT>
            <IPP_RESPONSE_TIME>P10D</IPP_RESPONSE_TIME>
        </IPP_INBOUND>
    </IPP_OPERATION>
</IPP_DEFINITION>
```

Copyright © 2022 BME e.V. - BMEcat® Version 2005.2
Copyright © 2010-2021 BME e.V. - BMEcat® Version 2005.1
Copyright © 2005-2009 BME e.V. - BMEcat® Version 2005
Copyright © 1998–2004 Fraunhofer IAO, Stuttgart; Universität Essen BLI - BMEcat® Version 1.2

IPP_OPERATOR_IDREF

(Reference to IPP provider)

This element provides a reference to the IPP provider. The reference must point to an existing **PARTY_ID**.

2005fd: New element

General					
Used in	Default value	Data type	Field length	Lang. specific	l.chg. in ver.
IPP_DEFINITION	-	**dtSTRING**	250	-	2005fd

Attributes								
Designation	Attribute name	Mandatory/ optional	Explanation	Default value	Data type	Field length	Lang. specific	l.chg. in ver.
Coding standard	type	Optional	This attribute is used to state the coding standard to which the identifier (**PARTY_ID**) adheres. The most common coding standards are predefined. See also: **Predefined values for attribute "type"**	-	**dtSTRING**	250	-	1.2_fd

Predefined values for attribute "type"			
Designation	Attribute value	Explanation	l.chg. in ver.
Buyer-specific number	buyer_specific	Identification number defined by the buyer	-
Customer specific number	customer_specific	Identification number defined by the customer	2005fd
Dun & Bradstreet	duns	DUNS-Number (see also **http://dbuk.dnb.com/english/DataBase/duns.htm**)	-
Global location number	iln	Internationally called GLN (see GLN below)	-
Global location number	gln	Global Location Number GLN (see also **http://www.ean-int.org/locations.html**)	2005fd
Party-specific number	party_specific	Identification number defined by the respective party	2005fd
Supplier-specific number	supplier_specific	Identification number defined by the supplier	-

Copyright © 2022 BME e.V. - BMEcat® Version 2005.2
Copyright © 2010-2021 BME e.V. - BMEcat® Version 2005.1
Copyright © 2005-2009 BME e.V. - BMEcat® Version 2005
Copyright © 1998–2004 Fraunhofer IAO, Stuttgart; Universität Essen BLI - BMEcat® Version 1.2

Predefined values for attribute "type"			
Designation	Attribute value	Explanation	l.chg. in ver.
Other codification standard	User defined value, format: \w{1,250}	Identificator of codification standard. "\w{1,250}" means that the identificator of the codification standard has to be at least 1 chraracter long up to a maximum of 250 characters.	-

Copyright © 2022 BME e.V. - BMEcat® Version 2005.2
Copyright © 2010-2021 BME e.V. - BMEcat® Version 2005.1
Copyright © 2005-2009 BME e.V. - BMEcat® Version 2005
Copyright © 1998–2004 Fraunhofer IAO, Stuttgart; Universität Essen BLI - BMEcat® Version 1.2

IPP_OPERATION

(IPP operation)

This element serves for specifying an IPP operation.

2005fd: New element

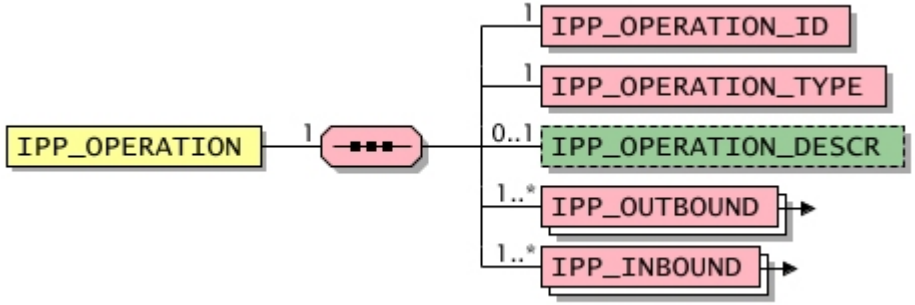

General					
Used in	Default value	Data type	Field length	Lang. specific	I.chg. in ver.
IPP_DEFINITION	-	-	-	-	2005fd

Elements									
Designation	Element name	Mandatory/ Optional	Single/ Multiple	Explanation	Default value	Data type	Field length	Lang. specific	I.chg. in ver.
IPP operation ID	**IPP_OPERATION_ID**	Mandatory	Single	Unique identifier of the IPP operation 2005fd: New element	-	**dtSTRING**	60	-	2005fd
IPP operation type	**IPP_OPERATION_TYPE**	Mandatory	Single	An IPP application can provide more than one operation. This element sets the operation. 2005fd: New element See also: **Permitted values for element IPP_OPERATION_TYPE**	-	**dtSTRING**	20	-	2005fd
Description of the IPP operation	**IPP_OPERATION_ DESCR**	Optional	Single	This element is used to describe the IPP operation.	-	**dtMLSTRING**	250	Yes	2005fd

Copyright © 2022 BME e.V. - BMEcat® Version 2005.2
Copyright © 2010-2021 BME e.V. - BMEcat® Version 2005.1
Copyright © 2005-2009 BME e.V. - BMEcat® Version 2005
Copyright © 1998–2004 Fraunhofer IAO, Stuttgart; Universität Essen BLI - BMEcat® Version 1.2

Elements									
Designation	Element name	Mandatory/ Optional	Single/ Multiple	Explanation	Default value	Data type	Field length	Lang. specific	l.chg. in ver.
IPP call	**IPP_OUTBOUND**	Mandatory	Multiple	Spezification of the IPP call	-	-	-	-	2005fd
IPP return	**IPP_INBOUND**	Mandatory	Multiple	Spezification of the IPP return	-	-	-	-	2005fd

Permitted values for element IPP_OPERATION_TYPE			
Designation	Element value	Explanation	l.chg. in ver.
Create	create	IPP application "external catalog": jumps to the external website of the IPP provider to build up a product list vie user interaction (e.g. product search or product configuration)	2005fd
Process	process	The meaning depends on the type of the IPP application (see **IPP_TYPE**). IPP application "product inquiry": starts a product inquiry for a list of products. IPP application "price inquiry": starts a price inquiry for a list of products. IPP application "availability inquiry": starts an availability inquiry for a list of products. IPP application "request for quotation": starts a request for quotation for a list of products.	2005fd
Recreate	recreate	The meaning depends on the type of the IPP application (see **IPP_TYPE**). IPP application "external catalog": makes a copy of the (old) product list and creates out of that a new changeble product list on the external website.	2005fd
Show	show	The meaning depends on the type of the IPP application (see **IPP_TYPE**). IPP application "external catalog": shows a shopping basket on the exsternal system (may include status information). IPP application "request for quotation": shows the status of a started request for quotation on the external system.	2005fd

Example
see example for element **IPP_DEFINITION , Beispiel 1**

Copyright © 2022 BME e.V. - BMEcat® Version 2005.2
Copyright © 2010-2021 BME e.V. - BMEcat® Version 2005.1
Copyright © 2005-2009 BME e.V. - BMEcat® Version 2005
Copyright © 1998–2004 Fraunhofer IAO, Stuttgart; Universität Essen BLI - BMEcat® Version 1.2

IPP_OUTBOUND

(IPP call)

This element contains information about the exchange format used for the IPP call and the exchanged parameter.

2005fd: New element

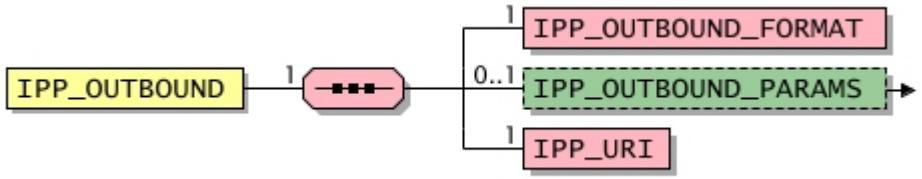

General					
Used in	Default value	Data type	Field length	Lang. specific	l.chg. in ver.
IPP_OPERATION	-	-	-	-	2005fd

Elements									
Designation	Element name	Mandatory/ Optional	Single/ Multiple	Explanation	Default value	Data type	Field length	Lang. specific	l.chg. in ver.
Exchange format	**IPP_OUTBOUND_ FORMAT**	Mandatory	Single	Exchange format used for implementing the IPP operation, e.g., OCI 4.0 (Open Catalog Interface) 2005fd: New element See also: **Predefined values for element IPP_OUTBOUND_FORMAT**	-	**dtSTRING**	50	-	2005fd
IPP input parameters	**IPP_OUTBOUND_ PARAMS**	Optional	Single	List of input parameters and their allowed values	-	-	-	-	2005
IPP operation URL	**IPP_URI**	Mandatory	Single	Calling address of the IPP operation 2005fd: New element	-	**dtMLSTRING**	255	Yes	2005fd

Copyright © 2022 BME e.V. - BMEcat® Version 2005.2
Copyright © 2010-2021 BME e.V. - BMEcat® Version 2005.1
Copyright © 2005-2009 BME e.V. - BMEcat® Version 2005
Copyright © 1998–2004 Fraunhofer IAO, Stuttgart; Universität Essen BLI - BMEcat® Version 1.2

Predefined values for element IPP_OUTBOUND_FORMAT			
Designation	Element value	Explanation	l.chg. in ver.
BMEcat	BMECAT-2005	Use of the exchange format BMEcat 2005. Attention: The needed document types are not specified yet; they may be available in future versions	2005fd
cXML	CXML-x.y.zzz	Use of the exchange format cXML by Ariba (e.g., CXML-1.2.011; see also **http://www.cxml.org**)	2005fd
cXML	OCI-x.yZ	Use of the exchange format OCI (Open Catalog Interface) by SAP (e.g., OCI-2.0B oder OCI-4.0; see also **http://help.sap.com/saphelp_crm20c/helpdata/en/0F/F2573901F0FE7CE10000000A114084/frameset.htm**)	2005fd
openTRANS	OPENTRANS-x.y	Use of the exchange openTRANS (e.g., OPENTRANS-1.0; see also **www.opentrans.org**) especially for the exchange of a quotation (see also **IPP_TYPE =rfq**))	2005fd
Other exchange format	User defined value, format: [\w\-\.]{1,50}	All other exchange formats not covered here shoul be described the same way: Name of the format in capital letters, ein hyphen and version with majorversion.minorversion(s) e.g. NAME-3.0. The combination of name and version information must not be empty or longer than 50 characters.	2005fd

Copyright © 2022 BME e.V. - BMEcat® Version 2005.2
Copyright © 2010-2021 BME e.V. - BMEcat® Version 2005.1
Copyright © 2005-2009 BME e.V. - BMEcat® Version 2005
Copyright © 1998–2004 Fraunhofer IAO, Stuttgart; Universität Essen BLI - BMEcat® Version 1.2

IPP_OUTBOUND_PARAMS

(IPP input parameters)

This element contains a list of input parameters that control the IPP application.

2005fd: New element
2005: The sub-element **IPP_CLASSIFICATION_INFO** was removed.

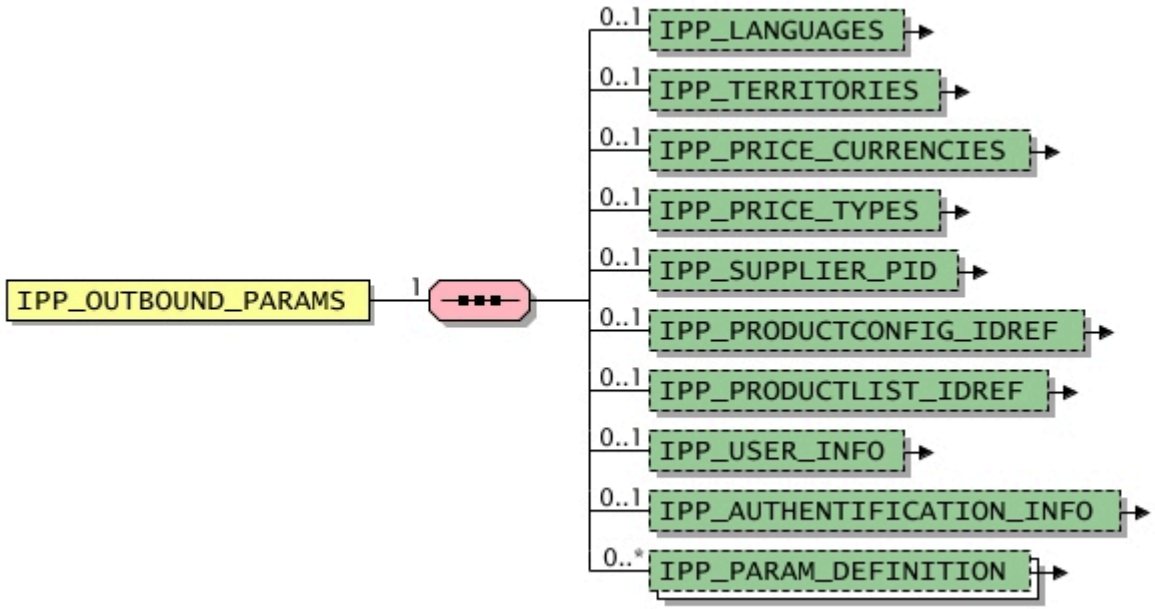

General					
Used in	Default value	Data type	Field length	Lang. specific	l.chg. in ver.
IPP_OUTBOUND	-	-	-	-	2005

Elements									
Designation	Element name	Mandatory/ Optional	Single/ Multiple	Explanation	Default value	Data type	Field length	Lang. specific	l.chg. in ver.
IPP languages	**IPP_LANGUAGES**	Optional	Single	List of languages that are supported by the IPP application.	-	-	-	-	2005fd

Copyright © 2022 BME e.V. - BMEcat® Version 2005.2
Copyright © 2010-2021 BME e.V. - BMEcat® Version 2005.1
Copyright © 2005-2009 BME e.V. - BMEcat® Version 2005
Copyright © 1998–2004 Fraunhofer IAO, Stuttgart; Universität Essen BLI - BMEcat® Version 1.2

Elements

Designation	Element name	Mandatory/ Optional	Single/ Multiple	Explanation	Default value	Data type	Field length	Lang. specific	l.chg. in ver.
	- occurence								
IPP countries and regions	**IPP_TERRITORIES** **- occurence**	Optional	Single	List of languages that are supported by the IPP application 	-	-	-	-	2005fd
IPP currencies	**IPP_PRICE_ CURRENCIES** **- occurence**	Optional	Single	List of currencies that are supported by the IPP application. 	-	-	-	-	2005fd
IPP price types	**IPP_PRICE_TYPES** **- occurence**	Optional	Single	List of price types that are supported by the IPP application. 	-	-	-	-	2005fd
IPP product ID	**IPP_SUPPLIER_PID** **- occurence**	Optional	Single	Product identifier as input for the IPP application 	-	-	-	-	2005fd
Reference to an IPP product configuration	**IPP_PRODUCTCONFIG_ IDREF** **- occurence**	Optional	Single	Reference to the unique identifier of a product configuration that is input for the IPP application. 	-	-	-	-	2005fd
Reference to an IPP shopping cart	**IPP_PRODUCTLIST_ IDREF** **- occurence**	Optional	Single	Specification if and how identifiers of product lists are used with an IPP application call. 	-	-	-	-	2005fd
IPP user information	**IPP_USER_INFO** **- occurence**	Optional	Single	Specification if and how user information are used with an IPP application call. 	-	-	-	-	2005fd
IPP authentification information	**IPP_ AUTHENTIFICATION_ INFO** **- occurence**	Optional	Single	Specification if and how authentification information are used with an IPP application call. 	-	-	-	-	2005fd
Other IPP input parameters	**IPP_PARAM_ DEFINITION** **- occurence**	Optional	Multiple	Specification if and how additional parameters have to be used in the IPP application 	-	-	-	-	2005fd

Copyright © 2022 BME e.V. - BMEcat® Version 2005.2
Copyright © 2010-2021 BME e.V. - BMEcat® Version 2005.1
Copyright © 2005-2009 BME e.V. - BMEcat® Version 2005
Copyright © 1998–2004 Fraunhofer IAO, Stuttgart; Universität Essen BLI - BMEcat® Version 1.2

IPP_LANGUAGES

(IPP languages)

This element contains a list of languages that are supported by the IPP application.

2005fd: New element

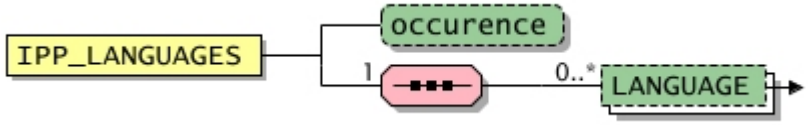

General					
Used in	Default value	Data type	Field length	Lang. specific	l.chg. in ver.
IPP_OUTBOUND_PARAMS	-	-	-	-	2005fd

Attributes								
Designation	Attribute name	Mandatory/ optional	Explanation	Default value	Data type	Field length	Lang. specific	l.chg. in ver.
Occurence	occurence	Optional	Declares whether the parameter is optional or mandatory. See also: **Permitted values for attribute "occurence"**	-	**dtSTRING**	20	-	2005fd

Permitted values for attribute "occurence"			
Designation	Attribute value	Explanation	l.chg. in ver.
Optional	optional	Otional occurence	2005fd
Mandatory	mandatory	Mandatory occurence	2005fd

Elements									
Designation	Element name	Mandatory/ Optional	Single/ Multiple	Explanation	Default value	Data type	Field length	Lang. specific	l.chg. in ver.
Language	**LANGUAGE** **- default**	Optional	Multiple	Specification of used languages, especially the default language of all language-dependent information	-	**dtLANG**	-	-	-

Copyright © 2022 BME e.V. - BMEcat® Version 2005.2
Copyright © 2010-2021 BME e.V. - BMEcat® Version 2005.1
Copyright © 2005-2009 BME e.V. - BMEcat® Version 2005
Copyright © 1998–2004 Fraunhofer IAO, Stuttgart; Universität Essen BLI - BMEcat® Version 1.2

IPP_TERRITORIES

(IPP countries and regions)

This element contais a list of languages that are supported by the IPP application.

2005fd: New element

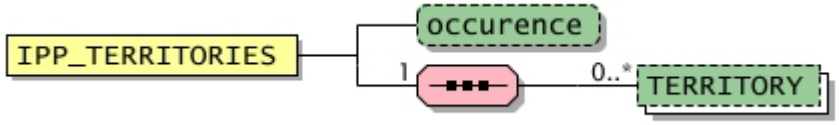

General					
Used in	Default value	Data type	Field length	Lang. specific	l.chg. in ver.
IPP_OUTBOUND_PARAMS	-	-	-	-	2005fd

Attributes								
Designation	Attribute name	Mandatory/ optional	Explanation	Default value	Data type	Field length	Lang. specific	l.chg. in ver.
Occurence	occurence	Optional	Declares whether the parameter is optional or mandatory. See also: **Permitted values for attribute "occurence"**	-	**dtSTRING**	20	-	2005fd

Permitted values for attribute "occurence"			
Designation	Attribute value	Explanation	l.chg. in ver.
Optional	optional	Otional occurence	2005fd
Mandatory	mandatory	Mandatory occurence	2005fd

Elements									
Designation	Element name	Mandatory/ Optional	Single/ Multiple	Explanation	Default value	Data type	Field length	Lang. specific	l.chg. in ver.
Territory	**TERRITORY**	Optional	Multiple	Territory (i.e. country, state, region) coded according to ISO 3166	-	**dtCOUNTRIES**	-	-	1.2_fd

Copyright © 2022 BME e.V. - BMEcat® Version 2005.2
Copyright © 2010-2021 BME e.V. - BMEcat® Version 2005.1
Copyright © 2005-2009 BME e.V. - BMEcat® Version 2005
Copyright © 1998–2004 Fraunhofer IAO, Stuttgart; Universität Essen BLI - BMEcat® Version 1.2

IPP_PRICE_CURRENCIES

(IPP currencies)

This element contains a list of currencies that are supported by the IPP application.

2005fd: New element

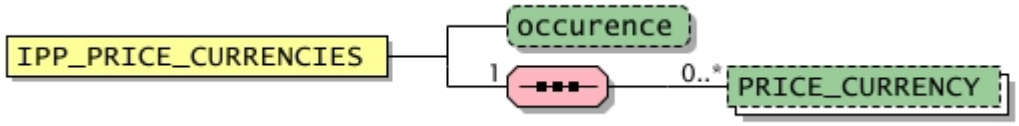

General						
Used in	Default value	Data type	Field length	Lang. specific	l.chg. in ver.
IPP_OUTBOUND_PARAMS	-	-	-	-	2005fd

Attributes								
Designation	Attribute name	Mandatory/ optional	Explanation	Default value	Data type	Field length	Lang. specific	l.chg. in ver.
Occurence	occurence	Optional	Declares whether the parameter is optional or mandatory. See also: **Permitted values for attribute "occurence"**	-	**dtSTRING**	20	-	2005fd

Permitted values for attribute "occurence"			
Designation	Attribute value	Explanation	l.chg. in ver.
Optional	optional	Otional occurence	2005fd
Mandatory	mandatory	Mandatory occurence	2005fd

Elements									
Designation	Element name	Mandatory/ Optional	Single/ Multiple	Explanation	Default value	Data type	Field length	Lang. specific	l.chg. in ver.
Price currency	**PRICE_CURRENCY**	Optional	Multiple	Currency of the price If nothing is specified in this field, the currency defined in the document header (**HEADER**) in the element **CURRENCY** is used for all prices.	-	**dtCURRENCIES**		-	-

Copyright © 2022 BME e.V. - BMEcat® Version 2005.2
Copyright © 2010-2021 BME e.V. - BMEcat® Version 2005.1
Copyright © 2005-2009 BME e.V. - BMEcat® Version 2005
Copyright © 1998–2004 Fraunhofer IAO, Stuttgart; Universität Essen BLI - BMEcat® Version 1.2

IPP_PRICE_TYPES

(IPP price types)

This element contains a list of price types that are supported by the IPP application.

2005fd: New element

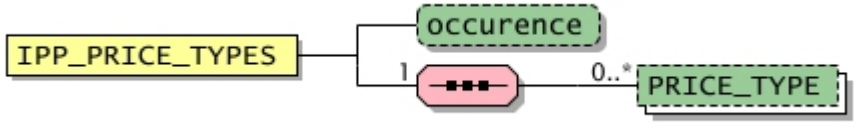

General					
Used in	Default value	Data type	Field length	Lang. specific	l.chg. in ver.
IPP_OUTBOUND_PARAMS	-	-	-	-	2005fd

Attributes								
Designation	Attribute name	Mandatory/ optional	Explanation	Default value	Data type	Field length	Lang. specific	l.chg. in ver.
Occurence	occurence	Optional	Declares whether the parameter is optional or mandatory. See also: **Permitted values for attribute "occurence"**	-	**dtSTRING**	20	-	2005fd

Permitted values for attribute "occurence"			
Designation	Attribute value	Explanation	l.chg. in ver.
Optional	optional	Otional occurence	2005fd
Mandatory	mandatory	Mandatory occurence	2005fd

Elements									
Designation	Element name	Mandatory/ Optional	Single/ Multiple	Explanation	Default value	Data type	Field length	Lang. specific	l.chg. in ver.
Price type	**PRICE_TYPE**	Optional	Multiple	This element determines the default price type for all products. The default price type can be replaced (or set) on the product level by the **PRODUCT_PRICE -->price_type** attribute.	-	**dtSTRING**	20	-	2005fd

Copyright © 2022 BME e.V. - BMEcat® Version 2005.2
Copyright © 2010-2021 BME e.V. - BMEcat® Version 2005.1
Copyright © 2005-2009 BME e.V. - BMEcat® Version 2005
Copyright © 1998–2004 Fraunhofer IAO, Stuttgart; Universität Essen BLI - BMEcat® Version 1.2

Elements									
Designation	Element name	Mandatory/ Optional	Single/ Multiple	Explanation	Default value	Data type	Field length	Lang. specific	l.chg. in ver.
				 2005fd: New element See also: **Predefined values for element PRICE_TYPE**					

Predefined values for element PRICE_TYPE			
Designation	Element value	Explanation	l.chg. in ver.
List price	gros_list	(Purchasing) list price including sales tax	-
Customer price	net_customer	Customer-specific end price excluding sales tax	-
Price for express delivery	net_customer_exp	Customer-specific end price for express delivery excluding sales tax This price type is not clearly defined enough. If it is to be used regardless, the supplier and the customer must clarify the exact meaning of the price.	-
List price	net_list	(Purchasing) list price excluding sales tax	-
Nonbinding recommended price	nrp	Nonbinding recommended (retail) price	1.2_fd
Price on request	on_request	The price is not given and has to be requested.	2005fd
User-defined price type	User defined value, format: udp_\w{1,16}	Any other user-defined prices with own price types are allowed to be transferred. These types must then have a type description beginning with "udp". User-defined types are likewise only allowed to be specified once per article. Example: udp_aircargo_price It is essential to clarify beforehand whether or not the target systems are able to process user-defined price types. Furthermore, the exact meaning of the prices must be clarified between the supplier and the customer.	-

Copyright © 2022 BME e.V. - BMEcat® Version 2005.2
Copyright © 2010-2021 BME e.V. - BMEcat® Version 2005.1
Copyright © 2005-2009 BME e.V. - BMEcat® Version 2005
Copyright © 1998–2004 Fraunhofer IAO, Stuttgart; Universität Essen BLI - BMEcat® Version 1.2

IPP_SUPPLIER_PID

(IPP product ID)

This element contains the identifier ID which is input for the IPP application.

2005fd: New element

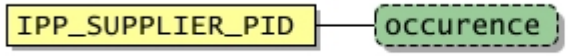

General					
Used in	Default value	Data type	Field length	Lang. specific	l.chg. in ver.
IPP_OUTBOUND_PARAMS	-	-	-	-	2005fd

Attributes								
Designation	Attribute name	Mandatory/ optional	Explanation	Default value	Data type	Field length	Lang. specific	l.chg. in ver.
Occurence	occurence	Optional	Declares whether the parameter is optional or mandatory. See also: **Permitted values for attribute "occurence"**	-	**dtSTRING**	20	-	2005fd

Permitted values for attribute "occurence"			
Designation	Attribute value	Explanation	l.chg. in ver.
Optional	optional	Otional occurence	2005fd
Mandatory	mandatory	Mandatory occurence	2005fd

Copyright © 2022 BME e.V. - BMEcat® Version 2005.2
Copyright © 2010-2021 BME e.V. - BMEcat® Version 2005.1
Copyright © 2005-2009 BME e.V. - BMEcat® Version 2005
Copyright © 1998–2004 Fraunhofer IAO, Stuttgart; Universität Essen BLI - BMEcat® Version 1.2

IPP_PRODUCTCONFIG_IDREF

(Reference to an IPP product configuration)

This element determines if and how identifiers of product configurations have to be used when calling an IPP application. This element must be empty and the occurence-attribute specifies, whether providing such an identifier is optional or mandatory.

2005fd: New element

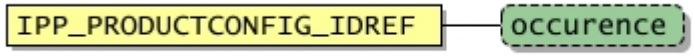

General					
Used in	Default value	Data type	Field length	Lang. specific	l.chg. in ver.
IPP_OUTBOUND_PARAMS	-	-	-	-	2005fd

Attributes								
Designation	Attribute name	Mandatory/ optional	Explanation	Default value	Data type	Field length	Lang. specific	l.chg. in ver.
Occurence	occurence	Optional	Declares whether the parameter is optional or mandatory. See also: **Permitted values for attribute "occurence"**	-	dtSTRING	20	-	2005fd

Permitted values for attribute "occurence"			
Designation	Attribute value	Explanation	l.chg. in ver.
Optional	optional	Otional occurence	2005fd
Mandatory	mandatory	Mandatory occurence	2005fd

Copyright © 2022 BME e.V. - BMEcat® Version 2005.2
Copyright © 2010-2021 BME e.V. - BMEcat® Version 2005.1
Copyright © 2005-2009 BME e.V. - BMEcat® Version 2005
Copyright © 1998–2004 Fraunhofer IAO, Stuttgart; Universität Essen BLI - BMEcat® Version 1.2

IPP_PRODUCTLIST_IDREF

(Reference to an IPP shopping cart)

This element specifies if and how identifiers of product lists are used with an IPP application call. The element has to be empty and the the attribute "occurance" states wether the transfer of this identifier is mandatory or optional.

2005fd: New element

General					
Used in	Default value	Data type	Field length	Lang. specific	l.chg. in ver.
IPP_OUTBOUND_PARAMS	-	-	-	-	2005fd

Attributes								
Designation	Attribute name	Mandatory/ optional	Explanation	Default value	Data type	Field length	Lang. specific	l.chg. in ver.
Occurence	occurence	Optional	Declares whether the parameter is optional or mandatory. See also: **Permitted values for attribute "occurence"**	-	**dtSTRING**	20	-	2005fd

Permitted values for attribute "occurence"			
Designation	Attribute value	Explanation	l.chg. in ver.
Optional	optional	Otional occurence	2005fd
Mandatory	mandatory	Mandatory occurence	2005fd

Copyright © 2022 BME e.V. - BMEcat® Version 2005.2
Copyright © 2010-2021 BME e.V. - BMEcat® Version 2005.1
Copyright © 2005-2009 BME e.V. - BMEcat® Version 2005
Copyright © 1998–2004 Fraunhofer IAO, Stuttgart; Universität Essen BLI - BMEcat® Version 1.2

IPP_USER_INFO

(IPP user information)

This element specifies if and how user information are used with an IPP application call. Two cases have to be distinguished: If there are user information included in this element these user information have to be transfered during the IPP application call. If the element is empty the attribute "occurance" states wether the user information is mandatory or optional in the IPP call but not which are the user information.

2005fd: New element

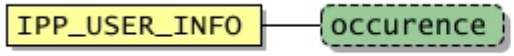

General						
Used in	Default value	Data type	Field length	Lang. specific	I.chg. in ver.	
IPP_OUTBOUND_PARAMS	-	-	-	-	2005fd	

Attributes								
Designation	Attribute name	Mandatory/ optional	Explanation	Default value	Data type	Field length	Lang. specific	I.chg. in ver.
Occurence	occurence	Optional	Declares whether the parameter is optional or mandatory. See also: **Permitted values for attribute "occurence"**	-	**dtSTRING**	20	-	2005fd

Permitted values for attribute "occurence"			
Designation	Attribute value	Explanation	I.chg. in ver.
Optional	optional	Otional occurence	2005fd
Mandatory	mandatory	Mandatory occurence	2005fd

Copyright © 2022 BME e.V. - BMEcat® Version 2005.2
Copyright © 2010-2021 BME e.V. - BMEcat® Version 2005.1
Copyright © 2005-2009 BME e.V. - BMEcat® Version 2005
Copyright © 1998–2004 Fraunhofer IAO, Stuttgart; Universität Essen BLI - BMEcat® Version 1.2

IPP_AUTHENTIFICATION_INFO

(IPP authentification information)

This element specifies if and how authentification information are used with an IPP application call. Two cases have to be distinguished: If there are authentification information included in this element these authentification information have to be transfered during the IPP application call. If the element is empty the attribute "occurance" states wether the authentification information is mandatory or optional in the IPP call but not which are the authentification information.

2005fd: New element

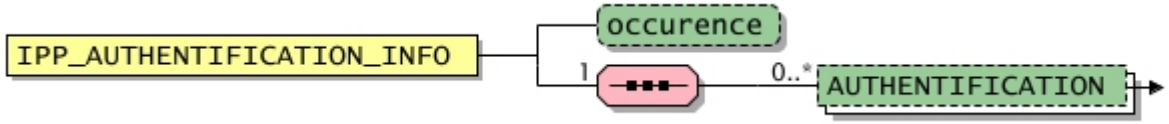

General					
Used in	Default value	Data type	Field length	Lang. specific	l.chg. in ver.
IPP_OUTBOUND_PARAMS	-	-	-	-	2005fd

Attributes								
Designation	Attribute name	Mandatory/ optional	Explanation	Default value	Data type	Field length	Lang. specific	l.chg. in ver.
Occurence	occurence	Optional	Declares whether the parameter is optional or mandatory. See also: **Permitted values for attribute "occurence"**	-	**dtSTRING**	20	-	2005fd

Permitted values for attribute "occurence"			
Designation	Attribute value	Explanation	l.chg. in ver.
Optional	optional	Optional occurence	2005fd
Mandatory	mandatory	Mandatory occurence	2005fd

Elements									
Designation	Element name	Mandatory/ Optional	Single/ Multiple	Explanation	Default value	Data type	Field length	Lang. specific	l.chg. in ver.
Authentification information	**AUTHENTIFICATION**	Optional	Multiple	Authentification information	-	-	-	-	2005fd

Copyright © 2022 BME e.V. - BMEcat® Version 2005.2
Copyright © 2010-2021 BME e.V. - BMEcat® Version 2005.1
Copyright © 2005-2009 BME e.V. - BMEcat® Version 2005
Copyright © 1998–2004 Fraunhofer IAO, Stuttgart; Universität Essen BLI - BMEcat® Version 1.2

Elements									
Designation	Element name	Mandatory/ Optional	Single/ Multiple	Explanation	Default value	Data type	Field length	Lang. specific	l.chg. in ver.

Copyright © 2022 BME e.V. - BMEcat® Version 2005.2
Copyright © 2010-2021 BME e.V. - BMEcat® Version 2005.1
Copyright © 2005-2009 BME e.V. - BMEcat® Version 2005
Copyright © 1998–2004 Fraunhofer IAO, Stuttgart; Universität Essen BLI - BMEcat® Version 1.2

AUTHENTIFICATION

(Authentification information)

This element contains authentification information that is forwarded to the respective application.

2005fd: New element

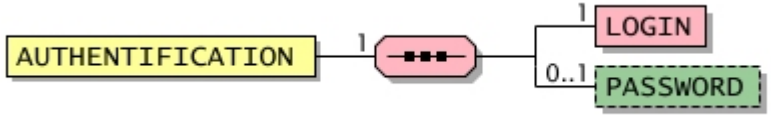

General					
Used in	Default value	Data type	Field length	Lang. specific	l.chg. in ver.
IPP_AUTHENTIFICATION_INFO	-	-	-	-	2005fd

Elements									
Designation	Element name	Mandatory/ Optional	Single/ Multiple	Explanation	Default value	Data type	Field length	Lang. specific	l.chg. in ver.
Login	**LOGIN**	Mandatory	Single	Login as part of the authentification 2005fd: New element	-	**dtSTRING**	60	-	2005fd
Password	**PASSWORD**	Optional	Single	Password for the login. 2005fd: New element	-	**dtSTRING**	20	-	2005fd

Copyright © 2022 BME e.V. - BMEcat® Version 2005.2
Copyright © 2010-2021 BME e.V. - BMEcat® Version 2005.1
Copyright © 2005-2009 BME e.V. - BMEcat® Version 2005
Copyright © 1998–2004 Fraunhofer IAO, Stuttgart; Universität Essen BLI - BMEcat® Version 1.2

IPP_PARAM_DEFINITION

(Other IPP input parameters)

This element is used to define if and how additional parameters have to be used in the IPP application.

2005fd: New element

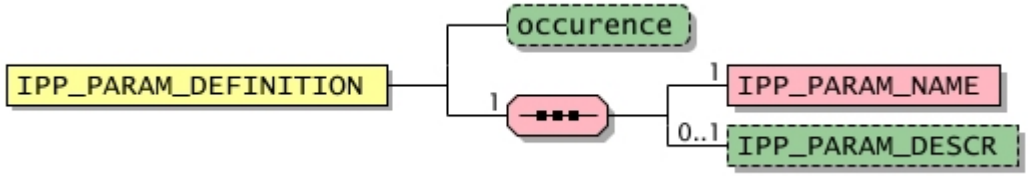

General					
Used in	Default value	Data type	Field length	Lang. specific	l.chg. in ver.
IPP_INBOUND_PARAMS, IPP_OUTBOUND_PARAMS	-	-	-	-	2005fd

Attributes								
Designation	Attribute name	Mandatory/ optional	Explanation	Default value	Data type	Field length	Lang. specific	l.chg. in ver.
Occurence	occurence	Optional	Declares whether the parameter is optional or mandatory. See also: **Permitted values for attribute "occurence"**	-	**dtSTRING**	20	-	2005fd

Permitted values for attribute "occurence"			
Designation	Attribute value	Explanation	l.chg. in ver.
Optional	optional	Otional occurence	2005fd
Mandatory	mandatory	Mandatory occurence	2005fd

Elements									
Designation	Element name	Mandatory/ Optional	Single/ Multiple	Explanation	Default value	Data type	Field length	Lang. specific	l.chg. in ver.
Parameter name	**IPP_PARAM_NAME**	Mandatory	Single	Name of the parameter	-	**dtSTRING**	100	-	2005fd

Copyright © 2022 BME e.V. - BMEcat® Version 2005.2
Copyright © 2010-2021 BME e.V. - BMEcat® Version 2005.1
Copyright © 2005-2009 BME e.V. - BMEcat® Version 2005
Copyright © 1998–2004 Fraunhofer IAO, Stuttgart; Universität Essen BLI - BMEcat® Version 1.2

Elements									
Designation	Element name	Mandatory/ Optional	Single/ Multiple	Explanation	Default value	Data type	Field length	Lang. specific	I.chg. in ver.
				2005fd: New element					
Description of the parameter	**IPP_PARAM_DESCR**	Optional	Single	This element is used to describe the parameter. 2005fd: New element	-	**dtMLSTRING**	250	Yes	2005fd

Copyright © 2022 BME e.V. - BMEcat® Version 2005.2
Copyright © 2010-2021 BME e.V. - BMEcat® Version 2005.1
Copyright © 2005-2009 BME e.V. - BMEcat® Version 2005
Copyright © 1998–2004 Fraunhofer IAO, Stuttgart; Universität Essen BLI - BMEcat® Version 1.2

IPP_INBOUND

(IPP return)

This element contains information about the exchange format used for the IPP return and the exchanged parameter.

2005fd: New element

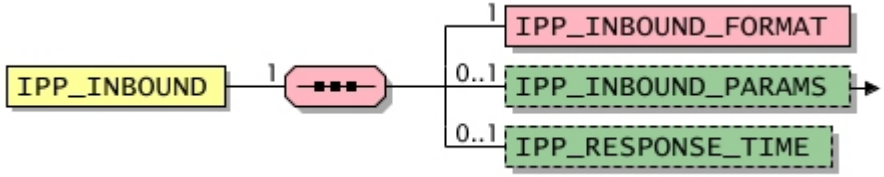

General					
Used in	Default value	Data type	Field length	Lang. specific	l.chg. in ver.
IPP_OPERATION	-	-	-	-	2005fd

Elements									
Designation	Element name	Mandatory/ Optional	Single/ Multiple	Explanation	Default value	Data type	Field length	Lang. specific	l.chg. in ver.
Exchange format	**IPP_INBOUND_FORMAT**	Mandatory	Single	Exchange format used for implementing the IPP operation, e.g., OCI 4.0 (Open Catalog Interface) 2005fd: New element See also: **Predefined values for element IPP_INBOUND_FORMAT**	-	**dtSTRING**	50	-	2005fd
IPP output parameters	**IPP_INBOUND_PARAMS**	Optional	Single	List of output parameters and their allowed values of the IPP application	-	-	-	-	2005fd
Response time	**IPP_RESPONSE_TIME**	Optional	Single	Guaranteed response time of the IPP application. If no response is received after this time beginning with the IPP initiation, the transaction has failed. 2005fd: New element	-	**dtDURATION**	-	-	2005fd

Copyright © 2022 BME e.V. - BMEcat® Version 2005.2
Copyright © 2010-2021 BME e.V. - BMEcat® Version 2005.1
Copyright © 2005-2009 BME e.V. - BMEcat® Version 2005
Copyright © 1998–2004 Fraunhofer IAO, Stuttgart; Universität Essen BLI - BMEcat® Version 1.2

Predefined values for element IPP_INBOUND_FORMAT			
Designation	Element value	Explanation	l.chg. in ver.
BMEcat	BMECAT-2005	Use of the exchange format BMEcat 2005. Attention: The needed document types are not specified yet; they may be available in future versions	2005fd
cXML	CXML-x.y.zzz	Use of the exchange format cXML by Ariba (e.g., CXML-1.2.011; see also **http://www.cxml.org**)	2005fd
cXML	OCI-x.yZ	Use of the exchange format OCI (Open Catalog Interface) by SAP (e.g., OCI-2.0B oder OCI-4.0; see also **http://help.sap.com/saphelp_crm20c/helpdata/en/0F/F2573901F0FE7CE10000000A114084/frameset.htm**)	2005fd
openTRANS	OPENTRANS-x.y	Use of the exchange openTRANS (e.g., OPENTRANS-1.0; see also **www.opentrans.org**) especially for the exchange of a quotation (see also **IPP_TYPE =rfq**))	2005fd
e-mail	email	Usage of e-mail transfer for the IPP return; the e-mail address has to be agreed upon bilateral.	2005fd
fax	fax	Usage of fax for the IPP return; the fax number has to be agreed upon bilateral.	2005fd
Post delivery	mail	Usage of postal letter for the IPP return; the postal address has to be agreed upon bilateral.	2005fd
Other exchange format	User defined value, format: [\w\-\.]{1,50}	All other exchange formats not covered here shoul be described the same way: Name of the format in capital letters, ein hyphen and version with majorversion.minorversion(s) e.g. NAME-3.0. The combination of name and version information must not be empty or longer than 50 characters.	2005fd

Copyright © 2022 BME e.V. - BMEcat® Version 2005.2
Copyright © 2010-2021 BME e.V. - BMEcat® Version 2005.1
Copyright © 2005-2009 BME e.V. - BMEcat® Version 2005
Copyright © 1998–2004 Fraunhofer IAO, Stuttgart; Universität Essen BLI - BMEcat® Version 1.2

IPP_INBOUND_PARAMS

(IPP output parameters)

This element contains a list of output parameters that are received from the IPP application.

2005fd: New element

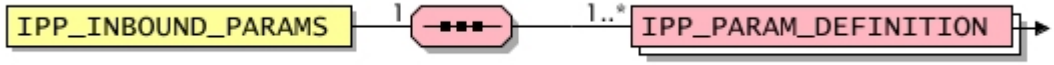

General					
Used in	Default value	Data type	Field length	Lang. specific	l.chg. in ver.
IPP_INBOUND	-	-	-	-	2005fd

Elements									
Designation	Element name	Mandatory/ Optional	Single/ Multiple	Explanation	Default value	Data type	Field length	Lang. specific	l.chg. in ver.
Other IPP input parameters	**IPP_PARAM_ DEFINITION - occurence**	Mandatory	Multiple	Specification if and how additional parameters have to be used in the IPP application	-	-	-	-	2005fd

Copyright © 2022 BME e.V. - BMEcat® Version 2005.2
Copyright © 2010-2021 BME e.V. - BMEcat® Version 2005.1
Copyright © 2005-2009 BME e.V. - BMEcat® Version 2005
Copyright © 1998–2004 Fraunhofer IAO, Stuttgart; Universität Essen BLI - BMEcat® Version 1.2

PRODUCT in context T_NEW_CATALOG

(Product)

This element contains information about a product.

2005fd: This new element replaces with a modified semantics the former **ARTICLE** in context T_NEW_CATALOGelement; it has been extended by the following sub-elements: **SUPPLIER_IDREF**, **PRODUCT_CONTACTS**, **PRODUCT_IPP_DETAILS**, **PRODUCT_LOGISTIC_DETAILS**, **PRODUCT_CONFIG_DETAILS**, **PRODUCT_MODULES**; the sub-element **SUPPLIER_AID** has been renamed to **SUPPLIER_PID**; the sub-element **ARTICLE_DETAILS** has been renamed to **PRODUCT_DETAILS**; the sub-element **ARTICLE_FEATURES** has been renamed to **PRODUCT_FEATURES**; the sub-element **ARTICLE_ORDER_DETAILS** has been renamed to **PRODUCT_ORDER_DETAILS**; the sub-element **ARTICLE_PRICE_DETAILS** has been renamed to **PRODUCT_PRICE_DETAILS**; the sub-element **ARTICLE_REFERENCE** has been renamed to **PRODUCT_REFERENCE**

2005: The sub-element **PRODUCT_MODULES**which had been added in BMEcat 2005 final draft, was removed again.

Copyright © 2022 BME e.V. - BMEcat® Version 2005.2
Copyright © 2010-2021 BME e.V. - BMEcat® Version 2005.1
Copyright © 2005-2009 BME e.V. - BMEcat® Version 2005
Copyright © 1998–2004 Fraunhofer IAO, Stuttgart; Universität Essen BLI - BMEcat® Version 1.2

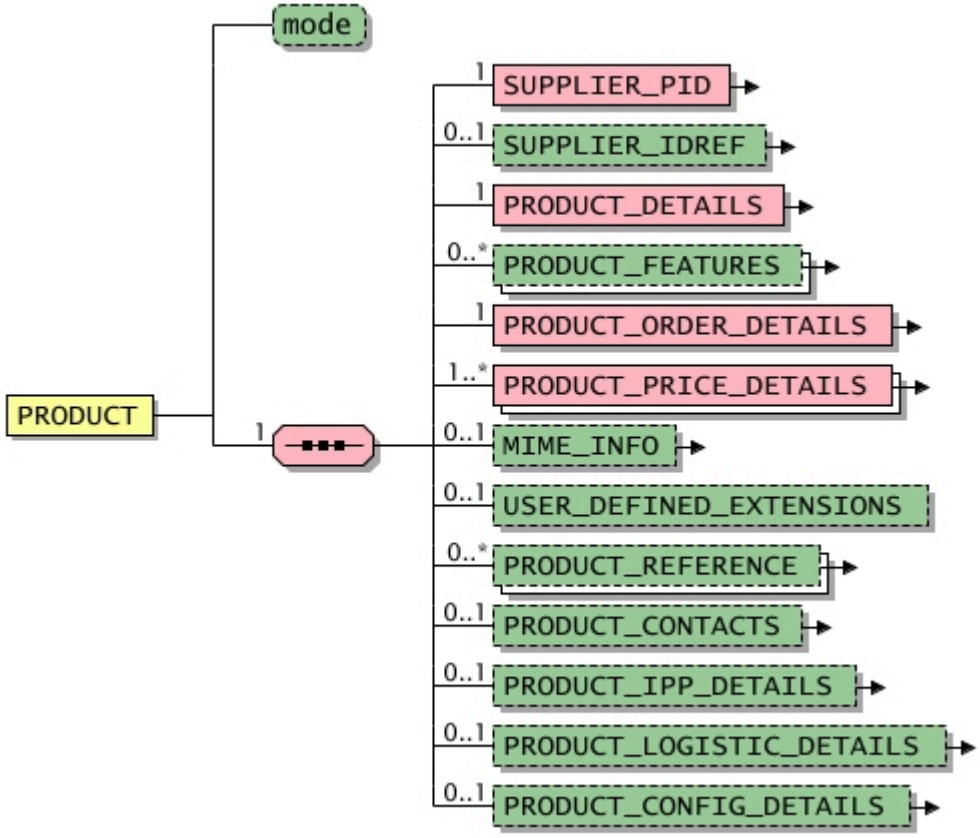

General

Used in	Default value	Data type	Field length	Lang. specific	l.chg. in ver.
T_NEW_CATALOG	-	-	-	-	2005

Attributes

Designation	Attribute name	Mandatory/ optional	Explanation	Default value	Data type	Field length	Lang. specific	l.chg. in ver.
Transfer mode	mode	Optional	Determines how the transferred data should be processed by the target system (insert, update, delete); see also example (**combination of different transactions**)"	new	**dtSTRING**	20	-	-

Copyright © 2022 BME e.V. - BMEcat® Version 2005.2
Copyright © 2010-2021 BME e.V. - BMEcat® Version 2005.1
Copyright © 2005-2009 BME e.V. - BMEcat® Version 2005
Copyright © 1998–2004 Fraunhofer IAO, Stuttgart; Universität Essen BLI - BMEcat® Version 1.2

Attributes

Designation	Attribute name	Mandatory/ optional	Explanation	Default value	Data type	Field length	Lang. specific	l.chg. in ver.
			If the transfer mode for the **T_NEW_CATALOG**transaction is set in a not allowed way, the following procedure is recommended wird bei einer unzulässigen Angabe des Übertragungsmodus folgende Vorgehensweise empfohlen: Mode / Error / Recommendation update / Wrong mode / Error, do not import product delete / Wrong mode / Error, do not import product Therefore, if the **T_NEW_CATALOG** transaction uses the transfer mode (**PRODUCT -->mode** in context T_NEW_CATALOG) 'delete' or 'update', the mode is wrong, and the product should not be imported at all. See also: **Permitted values for attribute "mode"**					

Permitted values for attribute "mode"

Designation	Attribute value	Explanation	l.chg. in ver.
Insert product	**new**	In the context of the **T_NEW_CATALOG** transaction, determing the transfer mode is not necessary, otherwise it is always 'new'. See also example (**combination of different transactions**)".	-

Elements

Designation	Element name	Mandatory/ Optional	Single/ Multiple	Explanation	Default value	Data type	Field length	Lang. specific	l.chg. in ver.
Supplier's product ID	**SUPPLIER_PID - type**	Mandatory	Single	This element contains the product number issued by the supplier. It is determining for ordering the product; it identifies the product in the supplier catalog. In multi-supplier catalogs, however, only the combination of **SUPPLIER_PID** and **SUPPLIER_IDREF** identifies a product.	-	**dtSTRING**	32	-	2005
Reference to supplier	**SUPPLIER_IDREF - type**	Optional	Single	Reference to the supplier. It contains the unique identifier (**PARTY_ID**) of the respective party that is defined in the document (element **PARTY**).	-	**dtSTRING**	250	-	2005fd
Product details	**PRODUCT_DETAILS**	Mandatory	Single	Identification and description of the product	-	-	-	-	2005fd
Product features	**PRODUCT_FEATURES**	Optional	Multiple	Description of the product by features and/or classification of the product	-	-	-	-	2005

Copyright © 2022 BME e.V. - BMEcat® Version 2005.2
Copyright © 2010-2021 BME e.V. - BMEcat® Version 2005.1
Copyright © 2005-2009 BME e.V. - BMEcat® Version 2005
Copyright © 1998–2004 Fraunhofer IAO, Stuttgart; Universität Essen BLI - BMEcat® Version 1.2

Elements

Designation	Element name	Mandatory/ Optional	Single/ Multiple	Explanation	Default value	Data type	Field length	Lang. specific	I.chg. in ver.
				*					
Order details	**PRODUCT_ORDER_ DETAILS**	Mandatory	Single	Order information and packaging policies of the product *	-	-	-	-	2005fd
Price details	**PRODUCT_PRICE_ DETAILS**	Mandatory	Multiple	Price information for the product *	-	-	-	-	2005fd
Additional multimedia information	**MIME_INFO**	Optional	Single	Information about multimedia files	-	-	-	-	-
User-defined extensions	**USER_DEFINED_ EXTENSIONS**	Optional	Single	This element can be used for transferring information in user-defined non-BMEcat-elements; hence it is possible to extend the pre-defined set of BMEcat-elements by user-defined ones. The usage of those elements results in BMEcat catalog documents, which can only be exchanged between the companies that have agreed on these extensions. The structure of these elements can be very complex, though it must be valid XML. ! **USER_DEFINED_EXTENSIONS** are defined exclusively as optional fields. Therefore, it is expressly pointed out that if user-defined extensions are used they must be compatible with the target systems and should be clarified on a case-to-case basis. The names of the elements must be clearly distinguishable from the names of other elements contained in the BMEcat standard. For this reason, all element must start with the string "UDX" (Example: <UDX.supplier.elementname>). The definition of user-defined extensions takes place by additional XML DTD or XML Schema files. **Example: usage of non-BMEcat elements (XML)**	-	udxPRODUCT	-	-	-

```
<PRODUCT mode="new">
    <SUPPLIER_PID>100325235</SUPPLIER_PID>
    <PRODUCT_DETAILS>
         ...
    </PRODUCT_DETAILS>
    <ORDER_DETAILS>
         ...
    </ORDER_DETAILS>
    <USER_DEFINED_EXTENSIONS>
        <UDX.MYORG.PATENTNO>35120561614261</UDX.MYORG.PATENTNO>
```

Copyright © 2022 BME e.V. - BMEcat® Version 2005.2
Copyright © 2010-2021 BME e.V. - BMEcat® Version 2005.1
Copyright © 2005-2009 BME e.V. - BMEcat® Version 2005
Copyright © 1998–2004 Fraunhofer IAO, Stuttgart; Universität Essen BLI - BMEcat® Version 1.2

Elements									
Designation	Element name	Mandatory/ Optional	Single/ Multiple	Explanation	Default value	Data type	Field length	Lang. specific	I.chg. in ver.
				<UDX.MYORG.PATENTDATE>2004-11-14</UDX.MYORG.PATENTDATE> </USER_DEFINED_EXTENSIONS> </PRODUCT>					
Product reference	**PRODUCT_REFERENCE** **- type** **- quantity**	Optional	Multiple	Reference to another product	-	-	-	-	2005
Product contacts	**PRODUCT_CONTACTS**	Optional	Single	List of contact person for the product	-	-	-	-	2005
IPP details	**PRODUCT_IPP_ DETAILS**	Optional	Single	Product-specific information on IPP applications	-	-	-	-	2005fd
Logistics information	**PRODUCT_LOGISTIC_ DETAILS**	Optional	Single	Logistic information on the product	-	-	-	-	2005
Product configuration information	**PRODUCT_CONFIG_ DETAILS**	Optional	Single	Configuration information on the product	-	-	-	-	2005fd

Copyright © 2022 BME e.V. - BMEcat® Version 2005.2
Copyright © 2010-2021 BME e.V. - BMEcat® Version 2005.1
Copyright © 2005-2009 BME e.V. - BMEcat® Version 2005
Copyright © 1998–2004 Fraunhofer IAO, Stuttgart; Universität Essen BLI - BMEcat® Version 1.2

SUPPLIER_PID

(Supplier's product ID)

Some target systems are not able to accept all 32 characters (e.g., SAP max. 18 characters). It is therefore advisable to keep product identifications as short as possible.

2005fd: This new element replaces the **SUPPLIER_AID** element.
2005: The type-attribute was added to this element.

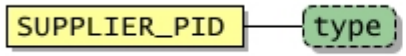

General					
Used in	Default value	Data type	Field length	Lang. specific	I.chg. in ver.
PACKING_UNIT, **PREDEFINED_CONFIG**, **PRODUCT** in context T_NEW_CATALOG, **PRODUCT** in context T_UPDATE_PRICES, **PRODUCT** in context T_UPDATE_PRODUCTS	-	**dtSTRING**	32	-	2005

Attributes								
Designation	Attribute name	Mandatory/ optional	Explanation	Default value	Data type	Field length	Lang. specific	I.chg. in ver.
Type of ID	type	Optional	This attribute specifies the type of ID, i.e. indicates the organization that has issued the ID. See also: **Predefined values for attribute "type"**	-	**dtSTRING**	50	-	-

Predefined values for attribute "type"			
Designation	Attribute value	Explanation	I.chg. in ver.
Buyer-specific number	buyer_specific	Identification number defined by the buyer	2005
European Article Number	ean	European article number (14 characters), s. **http://www.ean-int.org**	2005
Global Trade Item Number	gtin	Global Trade Item Number, see **http://www.uc-council.org/2005sunrise/global_trade_item_number.html**	2005
Supplier-specific number	supplier_specific	Identification number defined by the supplier	2005
Universal Product Code	upc	Universal Product Code; see **http://www.uc-council.org**	2005

Copyright © 2022 BME e.V. - BMEcat® Version 2005.2
Copyright © 2010-2021 BME e.V. - BMEcat® Version 2005.1
Copyright © 2005-2009 BME e.V. - BMEcat® Version 2005
Copyright © 1998–2004 Fraunhofer IAO, Stuttgart; Universität Essen BLI - BMEcat® Version 1.2

Predefined values for attribute "type"			
Designation	Attribute value	Explanation	l.chg. in ver.
User defined type	User defined value, format: \w{1,50}	Identification of the user defined type . "\w{1,50}" means that the type identification has to be at least 1 chraracter long up to a maximum of 50 characters.	2005

Copyright © 2022 BME e.V. - BMEcat® Version 2005.2
Copyright © 2010-2021 BME e.V. - BMEcat® Version 2005.1
Copyright © 2005-2009 BME e.V. - BMEcat® Version 2005
Copyright © 1998–2004 Fraunhofer IAO, Stuttgart; Universität Essen BLI - BMEcat® Version 1.2

PRODUCT_DETAILS

(Product details)

This element contains information for identifying and describing the product.

2005fd: This new element replaces with a modified semantics the **ARTICLE_DETAILS** element; it has been extended by the following sub-elements: **INTERNATIONAL_PID**, **MANUFACTURER_IDREF**, **INTERNATIONAL_RESTRICTIONS**, **ACCOUNTING_INFO**, **AGREEMENT_REF**, **PRODUCT_TYPE**, **PRODUCT_CATEGORY**; the sub-element **SUPPLIER_ALT_AID** has been replaced by **SUPPLIER_ALT_PID**; the sub-element **MANUFACTURER_AID** has been replaced by **MANUFACTURER_PID**; the sub-element **REMARKS** may occur more than once and has been extended by a 'type' attribute.

Copyright © 2022 BME e.V. - BMEcat® Version 2005.2
Copyright © 2010-2021 BME e.V. - BMEcat® Version 2005.1
Copyright © 2005-2009 BME e.V. - BMEcat® Version 2005
Copyright © 1998–2004 Fraunhofer IAO, Stuttgart; Universität Essen BLI - BMEcat® Version 1.2

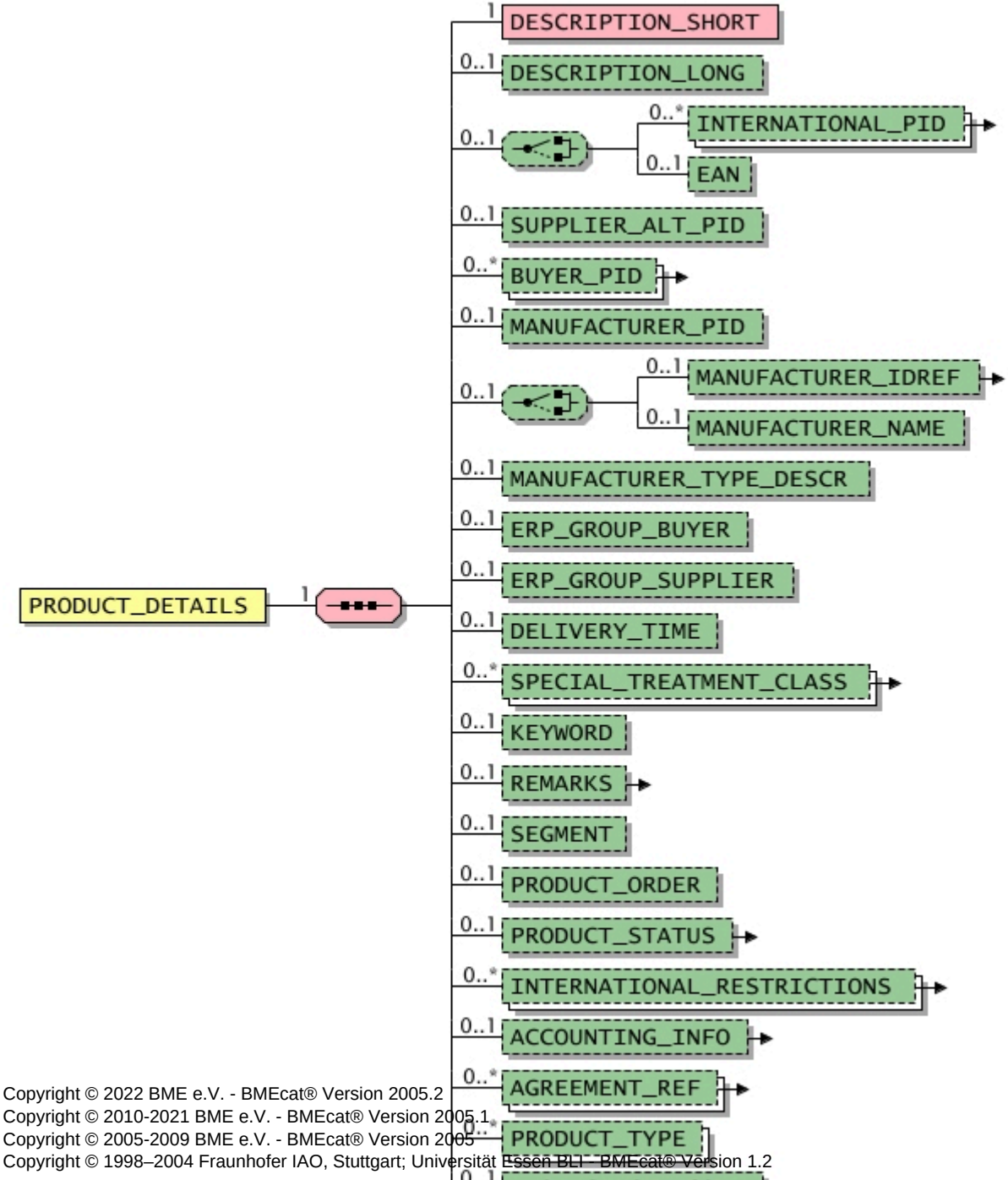

Copyright © 2022 BME e.V. - BMEcat® Version 2005.2
Copyright © 2010-2021 BME e.V. - BMEcat® Version 2005.1
Copyright © 2005-2009 BME e.V. - BMEcat® Version 2005
Copyright © 1998–2004 Fraunhofer IAO, Stuttgart; Universität Essen BLI - BMEcat® Version 1.2

General

Used in	Default value	Data type	Field length	Lang. specific	l.chg. in ver.
PRODUCT in context T_NEW_CATALOG, **PRODUCT** in context T_UPDATE_PRODUCTS	-	-	-	-	2005fd

Elements

Designation	Element name	Mandatory/ Optional	Single/ Multiple	Explanation	Default value	Data type	Field length	Lang. specific	l.chg. in ver.
Short description	**DESCRIPTION_SHORT**	Mandatory	Single	This element contains the short description of the product. In general, the description should be short and, whithin the first 40 characters, unique and meaningful, because many software systems can only interpret these 40 characters (i.e. SAP-OCI, SAP R/3). Detailed descriptions are beneficial to product search, especially if many products are quite similar and differ only in specific details. In these cases, product search returns a list of products from which the right product can easily be determined. Abbreviations of essential product characteristics should be avoided (e.g., bw for black and white). However, abbreviations of organisations and standards can be used (e.g., ISO, VDE).	-	**dtMLSTRING**	150	Yes	-
Long description	**DESCRIPTION_LONG**	Optional	Single	This element contains the long description of the product. Format: The following HTML tags are supported: <b> for bold, <i> for italic, <p> for paragraphs, for line break and <ul>/<li> for lists. In order to transfer these, the characters '<' and '>' must be enclosed in quotation marks, or the BMEcat DTD will not be accepted by the XML parser (see also chapter **Character encoding in XML**). Example: '<' = < or '>' = > The target system must support the interpretation of the day in order to achieve the desired formatting.	-	**dtMLSTRING**	64000	Yes	1.2_fd
International product number	**INTERNATIONAL_PID - type**	Optional	Multiple	Indicates an international product number (e.g., EAN). The underlying standard respectively organisation is given in the 'type' attribute. 	-	**dtSTRING**	100	-	2005fd
EAN	**EAN**	Optional	Single	This element contains the European Article Number (**http://www.ean-int.org**)	-	**dtSTRING**	14	-	-
Alternative product numnber	**SUPPLIER_ALT_PID**	Optional	Single	This element contains the alternative (internal) product number of the supplier. 2005fd: This new element replaces the **SUPPLIER_ALT_AID** element.	-	**dtSTRING**	50	-	2005fd
Product ID of the buying company	**BUYER_PID - type**	Optional	Multiple	Product number used by the buying firm. The "type" attribute specifies the type of ID.	-	**dtSTRING**	50	-	2005fd

Copyright © 2022 BME e.V. - BMEcat® Version 2005.2
Copyright © 2010-2021 BME e.V. - BMEcat® Version 2005.1
Copyright © 2005-2009 BME e.V. - BMEcat® Version 2005
Copyright © 1998–2004 Fraunhofer IAO, Stuttgart; Universität Essen BLI - BMEcat® Version 1.2

Elements

Designation	Element name	Mandatory/ Optional	Single/ Multiple	Explanation	Default value	Data type	Field length	Lang. specific	l.chg. in ver.
				If the element is used multiple, the values of the attribute "type" must differ. 					
Product ID of the manufacturer	**MANUFACTURER_PID**	Optional	Single	Product ID of the manufacturer 2005fd: This new element replaces former **MANUFACTURER_AID** element.	-	**dtSTRING**	50	-	2005fd
Reference to the manufacturer	**MANUFACTURER_ IDREF - type**	Optional	Single	This element provides a reference to the manufacturer. It contains the unique identifier (**PARTY_ID**) of the respective party that is defined in the document (element **PARTY**). 	-	**dtSTRING**	250	-	2005fd
Name of manufacturer	**MANUFACTURER_ NAME**	Optional	Single	This element contains the name of the manufacturer of the product.	-	**dtSTRING**	50	-	-
Manufacturer type description	**MANUFACTURER_ TYPE_DESCR**	Optional	Single	The manufacturer's type description is a name for the product which may, in certain circumstances, be more widely-known than the correct product name. When a manufacturer's type description is specified, the name of the manufacturer must also be specified (**MANUFACTURER_NAME**).	-	**dtMLSTRING**	50	Yes	1.2_fd
ERP material group of the buying company	**ERP_GROUP_BUYER**	Optional	Single	Specifies the material group or material class of the article in the ERP system of the buying company Value range: Depends on buying firm's ERP (**BUYER**)	-	**dtSTRING**	10	-	-
ERP material group of the supplier	**ERP_GROUP_ SUPPLIER**	Optional	Single	Specifices the material group or material class of the article in the supplier's ERP system	-	**dtSTRING**	10	-	-
Scheduled delivery time	**DELIVERY_TIME**	Optional	Single	This element containts the time in working days needed by the supplier to deliver the product.	-	**dtNUMBER**	-	-	1.2_fd
Special treatment class	**SPECIAL_TREATMENT_ CLASS - type**	Optional	Multiple	Additional product classification used for hazardous goods or substances, primary pharmaceutical products, radioactive measuring equipment, etc. The "type" attribute specifies the dangerous goods classification scheme.	-	**dtSTRING**	20	-	-
Keyword	**KEYWORD**	Optional	Single	Keyword that supports product search in target systems	-	**dtMLSTRING**	50	Yes	-
Remark	**REMARKS - type**	Optional	Single	Remark related to a business document	-	**dtMLSTRING**	64000	Yes	-
Segment	**SEGMENT**	Optional	Single	Catalog segment ('generic product group') to which the product belongs Example: Plumbing supplies, Electrical supplies	-	**dtMLSTRING**	100	Yes	1.2_fd
Product order	**PRODUCT_ORDER**	Optional	Single	Order in which the product has to be presented in the target system In list presentation of articles, the articles appear in ascending order (first article corresponds to lowest number).	-	**dtINTEGER**	-	-	2005fd

Copyright © 2022 BME e.V. - BMEcat® Version 2005.2
Copyright © 2010-2021 BME e.V. - BMEcat® Version 2005.1
Copyright © 2005-2009 BME e.V. - BMEcat® Version 2005
Copyright © 1998–2004 Fraunhofer IAO, Stuttgart; Universität Essen BLI - BMEcat® Version 1.2

Elements

Designation	Element name	Mandatory/ Optional	Single/ Multiple	Explanation	Default value	Data type	Field length	Lang. specific	l.chg. in ver.
				When all products of a catalog group are to be presented, sorting should comply with **PRODUCT_TO_CATALOGGROUP_MAP_ORDER**. 2005fd: This new element replaces the former **ARTICLE_ORDER** element.					
Special product status	**PRODUCT_STATUS - type**	Optional	Single	Theis element classifies a product in terms of its special characteristics. The status type is specified by the 'type' attribute. The value of the element reflects the text description of the special characteristics. If a product cannot be mapped to any of the predefined status types, "others" must be used. User-defined status types are not permitted. It is therefore possible, for example, to identify a product as a special offer or a new product and to comment on it. It is intended that the target system should highlight products identified in this way (e.g., graphic identification, including in a special catalog rubric or by search-and-find process which support this attribute). For each product multiple special status can be defined. The individual types may not appear more than once, however. The order in which the elements appear is not relevant. 	-	**dtMLSTRING**	250	Yes	2005fd
International delivery restrictions	**INTERNATIONAL_ RESTRICTIONS - type**	Optional	Multiple	Details of international restrictions, e.g. compulsory import / export authorization. 	-	**dtSTRING**	250	-	2005fd
Accounting information	**ACCOUNTING_INFO**	Optional	Single	Information on the accounting treatment of costs incurred by the buyer as a result of the order. This information is supplied by the buyer to allow the supplier to include it in the following invoice, thereby making invoice verification by the buyer easier. 	-	-	-	-	2005fd
Skeleton agreement reference	**AGREEMENT_REF**	Optional	Multiple	Reference to a skeleton agreement (**AGREEMENT**), which has been named in the document header. 	-	-	-	-	2005fd
Product type	**PRODUCT_TYPE**	Optional	Multiple	Characterizes the product with regard to its general type, i.e. being tangible or service 2005fd: New element See also: **Permitted values for element PRODUCT_TYPE**	-	**dtSTRING**	50	-	2005fd
Product category	**PRODUCT_CATEGORY**	Optional	Single	Characterises the product based on its usage	-	**dtSTRING**	20	-	2005fd

Copyright © 2022 BME e.V. - BMEcat® Version 2005.2
Copyright © 2010-2021 BME e.V. - BMEcat® Version 2005.1
Copyright © 2005-2009 BME e.V. - BMEcat® Version 2005
Copyright © 1998–2004 Fraunhofer IAO, Stuttgart; Universität Essen BLI - BMEcat® Version 1.2

Elements									
Designation	Element name	Mandatory/ Optional	Single/ Multiple	Explanation	Default value	Data type	Field length	Lang. specific	l.chg. in ver.
				 2005fd: New element See also: **Permitted values for element PRODUCT_CATEGORY**					

Permitted values for element PRODUCT_TYPE			
Designation	Element value	Explanation	l.chg. in ver.
Product bundle	bundle	The product is part of a product bundle.	2005fd
Component	component	The product is component of another product.	2005fd
Optionally configurable	configurable	The product can be configured. If the product is not configured by the user, it is determined by its default values. See also **PRODUCT_TYPE =must_be_ configured**.	2005fd
Contract	contract	The product is a contract.	2005fd
Licence	license	The product is a licence.	2005fd
Orderable product	major	The product can be ordered.	2005fd
Product part	minor	The product can only be ordered in conjunction with another product.	2005fd
Configurable	must_be_configured	The product has to be configured, unless it can not be ordered. See also **PRODUCT_TYPE =configurable**.	2005fd
Physical product	physical	The product is physical, thus tangible.	2005fd
Professionel Service	professional_services	The product is a professional service being provided by one or more individuals. The indivials are professionals in their field (e.g., accounting, educational, legal, medical, or architectural services).	2005fd
Service	service	The product is a service.	2005fd

Permitted values for element PRODUCT_CATEGORY			
Designation	Element value	Explanation	l.chg. in ver.
Consignment product	consignment	The product is a consignment product.	2005fd
Core product	core_product	The product belongs to the core.	2005fd
Preferred product	preferred	the product is a preferred product.	2005fd
Standard product	standard	The product is a standard product.	2005fd
Stock product	stock	The product is available on stock.	2005fd
Other	others	The product belongs to another category.	2005fd

Copyright © 2022 BME e.V. - BMEcat® Version 2005.2
Copyright © 2010-2021 BME e.V. - BMEcat® Version 2005.1
Copyright © 2005-2009 BME e.V. - BMEcat® Version 2005
Copyright © 1998–2004 Fraunhofer IAO, Stuttgart; Universität Essen BLI - BMEcat® Version 1.2

Example

```
<PRODUCT_DETAILS>
    <DESCRIPTION_SHORT>Standard letter tray DIN A4</DESCRIPTION_SHORT>
    <DESCRIPTION_LONG>A classic among letter trays.</DESCRIPTION_LONG>
    <INTERNATIONAL_PID type="ean">8712670911213</INTERNATIONAL_PID>
    <SUPPLIER_ALT_PID>2334lettertray</SUPPLIER_ALT_PID>
    <BUYER_PID type="buyer_specific">K4484</BUYER_PID>
    <MANUFACTURER_PID>123-RD-67-U</MANUFACTURER_PID>
    <MANUFACTURER_IDREF type="buyer_specific">1002335</MANUFACTURER_IDREF>
    <ERP_GROUP_BUYER>2301</ERP_GROUP_BUYER>
    <ERP_GROUP_SUPPLIER>6706060</ERP_GROUP_SUPPLIER>
    <KEYWORD>files</KEYWORD>
    <KEYWORD>stacker</KEYWORD>
    <REMARKS>can be horizontally or alternately stacked</REMARKS>
    <SEGMENT>organization equipment</SEGMENT>
    <PRODUCT_ORDER>10</PRODUCT_ORDER>
    <PRODUCT_STATUS type="bargain">Bargain</PRODUCT_STATUS>
    <AGREEMENT_REF>1436057257</AGREEMENT_REF>
    <PRODUCT_TYPE>physical</PRODUCT_TYPE>
    <PRODUCT_CATEGORY>new in this season</PRODUCT_CATEGORY>
</PRODUCT_DETAILS>
```

Copyright © 2022 BME e.V. - BMEcat® Version 2005.2
Copyright © 2010-2021 BME e.V. - BMEcat® Version 2005.1
Copyright © 2005-2009 BME e.V. - BMEcat® Version 2005
Copyright © 1998–2004 Fraunhofer IAO, Stuttgart; Universität Essen BLI - BMEcat® Version 1.2

INTERNATIONAL_PID

(International product number)

This element contains an international product number (e.g., EAN). The underlying standard respectively organisation is given in the 'type' attribute.

2005fd: This new element replaces with an increased maximum field length (100 characters instead of 14 respectively 50 characters) the former **EAN** and **SUPPLIER_ALT_PID** elements.

General					
Used in	Default value	Data type	Field length	Lang. specific	l.chg. in ver.
PREDEFINED_CONFIG, **PRODUCT_DETAILS**	-	**dtSTRING**	100	-	2005fd

Attributes								
Designation	Attribute name	Mandatory/ optional	Explanation	Default value	Data type	Field length	Lang. specific	l.chg. in ver.
Type of international product number	type	Optional	Specification of the underlying standard respectively organisation See also: **Predefined values for attribute "type"**	-	**dtSTRING**	50	-	2005fd

Predefined values for attribute "type"			
Designation	Attribute value	Explanation	l.chg. in ver.
European Article Number	ean	European article number (14 characters), s. **http://www.ean-int.org**	2005fd
Global Trade Item Number	gtin	Global Trade Item Number, see. **http://www.uc-council.org/ean_ucc_system/pdf/GTIN.pdf**	2005fd
Universal Product Code	upc	Universal Product Code, see **http://www.uc-council.org**	2005fd
User-defined type	User defined value, format: \w{1,50}	Identification of the user-defined type. "\w{1,50}" means that the type identification has to be at least 1 chraracter long up to a maximum of 50 characters.	2005fd

Copyright © 2022 BME e.V. - BMEcat® Version 2005.2
Copyright © 2010-2021 BME e.V. - BMEcat® Version 2005.1
Copyright © 2005-2009 BME e.V. - BMEcat® Version 2005
Copyright © 1998–2004 Fraunhofer IAO, Stuttgart; Universität Essen BLI - BMEcat® Version 1.2

BUYER_PID

(Product ID of the buying company)

This element contains the product number used by the buying company. The "type" attribute specifies the type of ID.

If the element is used multiple, the values of the attribute "type" must differ.

2005fd: This new element replaces the **BUYER_AID** element.

General					
Used in	Default value	Data type	Field length	Lang. specific	l.chg. in ver.
PRODUCT_DETAILS	-	**dtSTRING**	50	-	2005fd

Attributes								
Designation	Attribute name	Mandatory/ optional	Explanation	Default value	Data type	Field length	Lang. specific	l.chg. in ver.
Type of ID	type	Optional	This attribute specifies the type of ID, i.e. indicates the organization that has issued the ID. See also: **Predefined values for attribute "type"**	-	**dtSTRING**	50	-	-

Predefined values for attribute "type"			
Designation	Attribute value	Explanation	l.chg. in ver.
Buyer-specific number	buyer_specific	Identification number defined by the buyer	2005fd
European Article Number	ean	European article number (14 characters), s. **http://www.ean-int.org**	2005fd
Global Trade Item Number	gtin	Global Trade Item Number, see **http://www.uc-council.org/2005sunrise/global_trade_item_number.html**	2005fd
Universal Product Code	upc	Universal Product Code; see **http://www.uc-council.org**	2005fd
User defined type	User defined value, format: \w{1,50}	Identification of the user defined type . "\w{1,50}" means that the type identification has to be at least 1 chraracter long up to a maximum of 50 characters.	2005fd

Copyright © 2022 BME e.V. - BMEcat® Version 2005.2
Copyright © 2010-2021 BME e.V. - BMEcat® Version 2005.1
Copyright © 2005-2009 BME e.V. - BMEcat® Version 2005
Copyright © 1998–2004 Fraunhofer IAO, Stuttgart; Universität Essen BLI - BMEcat® Version 1.2

MANUFACTURER_IDREF

(Reference to the manufacturer)

This element provides a reference to the manufacturer. It contains the unique identifier (**PARTY_ID**) of the respective party that is defined in the document (element **PARTY**).

2005fd: New element

General					
Used in	Default value	Data type	Field length	Lang. specific	l.chg. in ver.
ARTICLE_DETAILS, **PRODUCT_DETAILS**	-	**dtSTRING**	250	-	2005fd

Attributes								
Designation	Attribute name	Mandatory/ optional	Explanation	Default value	Data type	Field length	Lang. specific	l.chg. in ver.
Coding standard	type	Optional	This attribute is used to state the coding standard to which the identifier (**PARTY_ID**) adheres. The most common coding standards are predefined. See also: **Predefined values for attribute "type"**	-	**dtSTRING**	250	-	1.2_fd

Predefined values for attribute "type"			
Designation	Attribute value	Explanation	l.chg. in ver.
Buyer-specific number	buyer_specific	Identification number defined by the buyer	-
Customer specific number	customer_specific	Identification number defined by the customer	2005fd
Dun & Bradstreet	duns	DUNS-Number (see also **http://dbuk.dnb.com/english/DataBase/duns.htm**)	-
Global location number	iln	Internationally called GLN (see GLN below)	-
Global location number	gln	Global Location Number GLN (see also **http://www.ean-int.org/locations.html**)	2005fd
Party-specific number	party_specific	Identification number defined by the respective party	2005fd
Supplier-specific number	supplier_specific	Identification number defined by the supplier	-

Copyright © 2022 BME e.V. - BMEcat® Version 2005.2
Copyright © 2010-2021 BME e.V. - BMEcat® Version 2005.1
Copyright © 2005-2009 BME e.V. - BMEcat® Version 2005
Copyright © 1998–2004 Fraunhofer IAO, Stuttgart; Universität Essen BLI - BMEcat® Version 1.2

Predefined values for attribute "type"			
Designation	Attribute value	Explanation	l.chg. in ver.
Other codification standard	User defined value, format: \w{1,250}	Identificator of codification standard. "\w{1,250}" means that the identificator of the codification standard has to be at least 1 chraracter long up to a maximum of 250 characters.	-

Copyright © 2022 BME e.V. - BMEcat® Version 2005.2
Copyright © 2010-2021 BME e.V. - BMEcat® Version 2005.1
Copyright © 2005-2009 BME e.V. - BMEcat® Version 2005
Copyright © 1998–2004 Fraunhofer IAO, Stuttgart; Universität Essen BLI - BMEcat® Version 1.2

SPECIAL_TREATMENT_CLASS

(Special treatment class)

This elements contains an additional product classification used for hazardous goods or substances, primary pharmaceutical products, radioactive measuring equipment, etc. The “type” attribute specifies the dangerous goods classification scheme.

General					
Used in	Default value	Data type	Field length	Lang. specific	l.chg. in ver.
ARTICLE_DETAILS, **PRODUCT_DETAILS**	-	**dtSTRING**	20	-	-

Attributes								
Designation	Attribute name	Mandatory/ optional	Explanation	Default value	Data type	Field length	Lang. specific	l.chg. in ver.
Name of the special treatment rule	type	Mandatory	Short term for the special treatment regulation, e.g., GGVS (Hazardous Goods Order for Road Traffic)	-	**dtSTRING**	50	-	-

Example

(Hazardous Goods Order for Road Traffic, heating oil)

```
<SPECIAL_TREATMENT_CLASS type="GGVS">1201</SPECIAL_TREATMENT_CLASS>
```

Copyright © 2022 BME e.V. - BMEcat® Version 2005.2
Copyright © 2010-2021 BME e.V. - BMEcat® Version 2005.1
Copyright © 2005-2009 BME e.V. - BMEcat® Version 2005
Copyright © 1998–2004 Fraunhofer IAO, Stuttgart; Universität Essen BLI - BMEcat® Version 1.2

REMARKS

(Remark)

This element contains remarks related to a business document.

The remark is identified with the attribute "type" for use in different business documents.

It is only permissible to identify remarks for use in this or the following business documents using the attribute "type".

Target systems are recommended to ignore remarks about previous business documents (History).

It is permissible to use the element more than once with the same "type" attribute.

Format: The following HTML tags are supported: <b> for bold, <i> for italic, <p> for paragraphs, <br> for line break and <ul>/<li> for lists. In order to transfer these, the characters '<' and '>' must be enclosed in quotation marks, or the BMEcat DTD will not be accepted by the XML parser (see also chapter **Character encoding in XML**).

Example: '<' = < or '>' = >

The target system must support the interpretation of the day in order to achieve the desired formatting.

General					
Used in	Default value	Data type	Field length	Lang. specific	l.chg. in ver.
ARTICLE_DETAILS, PRODUCT_DETAILS	-	**dtMLSTRING**	64000	Yes	-

Attributes								
Designation	Attribute name	Mandatory/ optional	Explanation	Default value	Data type	Field length	Lang. specific	l.chg. in ver.
Type of remark	type	Optional	Specifies the type of remark. The remark is identified for use in a variety of business documents. The business partner processing the document which matches the attribute evaluates the information contained, otherwise the information is passed on along the process chain. Example: type=deliverynote means that the remark entered appears on the delivery note , e.g. "Please ring at the ramp and ask for Mr Miller". 2005fd: New attribute	-	**dtSTRING**	250	-	2005fd

Copyright © 2022 BME e.V. - BMEcat® Version 2005.2
Copyright © 2010-2021 BME e.V. - BMEcat® Version 2005.1
Copyright © 2005-2009 BME e.V. - BMEcat® Version 2005
Copyright © 1998–2004 Fraunhofer IAO, Stuttgart; Universität Essen BLI - BMEcat® Version 1.2

Attributes								
Designation	Attribute name	Mandatory/ optional	Explanation	Default value	Data type	Field length	Lang. specific	l.chg. in ver.
			See also: **Predefined values for attribute "type"**					

Predefined values for attribute "type"			
Designation	Attribute value	Explanation	l.chg. in ver.
Delivery note	deliverynote	The remark is identified for use in the business document DELIVERYNOTE (delivery note exists in paper form only, as document accompanying the goods)	2005fd
Dispatch notification	dispatchnotification	The remark is identified for use in the business document DISPATCHNOTIFICATION	2005fd
General	general	The remark contained is of a general kind and not limited to usage in a specific business document.	2005fd
Invoice	invoice	The remark is identified for use in the business document INVOICE	2005fd
Order	order	The remark is identified for use in the business document ORDER	2005fd
Order change	orderchange	The remark is identified for use in the business document ORDERCHANGE	2005fd
Order response	orderresponse	The remark is identified for use in the business document ORDERRESPONSE	2005fd
Quotation	quotation	The remark is identified for use in the business document QUOTATION	2005fd
Confirmation of receipt of goods	receiptacknowledgement	The remark is identified for use in the business document RECEIPTACKNOWLEDGEMENT	2005fd
Request for submission of quotation	rfq	The remark is identified for use in the business document RFQ	2005fd
Transport	transport	The remark is identified for use in the business document TRANSPORT	2005fd
User defined type	User defined value, format: \w{1,250}	User defined type identification. "\w{1,250}" means that the type identification has to be at least 1 chraracter long up to a maximum of 250 characters.	2005fd

Copyright © 2022 BME e.V. - BMEcat® Version 2005.2
Copyright © 2010-2021 BME e.V. - BMEcat® Version 2005.1
Copyright © 2005-2009 BME e.V. - BMEcat® Version 2005
Copyright © 1998–2004 Fraunhofer IAO, Stuttgart; Universität Essen BLI - BMEcat® Version 1.2

PRODUCT_STATUS

(Special product status)

Theis element classifies a product in terms of its special characteristics. The status type is specified by the 'type' attribute. The value of the element reflects the text description of the special characteristics. If a product cannot be mapped to any of the predefined status types, "others" must be used. User-defined status types are not permitted.

It is therefore possible, for example, to identify a product as a special offer or a new product and to comment on it. It is intended that the target system should highlight products identified in this way (e.g., graphic identification, including in a special catalog rubric or by search-and-find process which support this attribute).

For each product multiple special status can be defined. The individual types may not appear more than once, however. The order in which the elements appear is not relevant.

2005fd: This new element replace the **ARTICLE_STATUS** element.

General						
Used in			Default value	Data type	Field length	Lang. specific	l.chg. in ver.
PRODUCT_DETAILS			-	**dtMLSTRING**	250	Yes	2005fd

Attributes								
Designation	Attribute name	Mandatory/ optional	Explanation	Default value	Data type	Field length	Lang. specific	l.chg. in ver.
Type of status	type	Mandatory	Type of special status of the product See also: **Permitted values for attribute "type"**	-	**dtSTRING**	20	-	-

Permitted values for attribute "type"			
Designation	Attribute value	Explanation	l.chg. in ver.
Bargain	bargain	A bargain is a product offered at a special low price for a limited period of time.	-
Core assortment	core_product	A product which belongs to the core assortment for a particular customer. 2005fd: The new value 'core_product' replace the value 'core_article'.	2005fd
New	new	A new product is a product which has only just been manufactured (i.e. has not been used).	-
New product	new_product	The product has recently been added to the catalog.	2005fd

Copyright © 2022 BME e.V. - BMEcat® Version 2005.2
Copyright © 2010-2021 BME e.V. - BMEcat® Version 2005.1
Copyright © 2005-2009 BME e.V. - BMEcat® Version 2005
Copyright © 1998–2004 Fraunhofer IAO, Stuttgart; Universität Essen BLI - BMEcat® Version 1.2

Permitted values for attribute "type"			
Designation	Attribute value	Explanation	l.chg. in ver.
		 2005fd: The new value 'new_product' replaces the value 'new_article'.	
Old product	old_product	An old product is an product which can no longer be purchased but which is still displayed in the catalog, for example in order to refer to the follow-up product (see also **PRODUCT_REFERENCE** element and its attribute "type" with value “followup”). 2005fd: The new value 'old_product' replaces the value 'old_article'.	2005fd
Refurbished	refurbished	A refurbished product is a used product that has been specially processed in order to restore it to a condition close to its original condition.	-
Used	used	An used product is an product which has already been in use.	-
Other status	others	This status can be used if non of the predefined statuses adequately describe the product.	-

Copyright © 2022 BME e.V. - BMEcat® Version 2005.2
Copyright © 2010-2021 BME e.V. - BMEcat® Version 2005.1
Copyright © 2005-2009 BME e.V. - BMEcat® Version 2005
Copyright © 1998–2004 Fraunhofer IAO, Stuttgart; Universität Essen BLI - BMEcat® Version 1.2

INTERNATIONAL_RESTRICTIONS

(International delivery restrictions)

This element contains details of international restrictions, e.g. compulsory import / export authorization.

2005fd: New element

General					
Used in	Default value	Data type	Field length	Lang. specific	l.chg. in ver.
ARTICLE_DETAILS, **PRODUCT_DETAILS**	-	**dtSTRING**	250	-	2005fd

Attributes								
Designation	Attribute name	Mandatory/ optional	Explanation	Default value	Data type	Field length	Lang. specific	l.chg. in ver.
Type of restriction	type	Mandatory	Specifies the type of international delivery restriction. See also: **Predefined values for attribute "type"**	-	**dtSTRING**	50	-	2005fd

Predefined values for attribute "type"			
Designation	Attribute value	Explanation	l.chg. in ver.
EU-embargo	eu-embargo	The embargo is an embargo by the European Union.	2005fd
National	national	The delivery restriction is valid nationally.	2005fd
UN-embargo	un-embargo	The embargo is an embargo by the United Nations.	2005fd
US-embargo	us-embargo	The embargo is a US-American delivery restriction.	2005fd
WTO-embargo	wto-embargo	This is a case of an embargo by the World Trade Organization.	2005fd
Other	other	This is a different delivery limitation.	2005fd
User defined type	User defined value, format: [\w\-\.]{1,50}	Identification of the user defined type . "\w{1,50}" means that the type identification has to be at least 1 chraracter long up to a maximum of 50 characters.	2005fd

Copyright © 2022 BME e.V. - BMEcat® Version 2005.2
Copyright © 2010-2021 BME e.V. - BMEcat® Version 2005.1
Copyright © 2005-2009 BME e.V. - BMEcat® Version 2005
Copyright © 1998–2004 Fraunhofer IAO, Stuttgart; Universität Essen BLI - BMEcat® Version 1.2

ACCOUNTING_INFO

(Accounting information)

This element contains information about accounting processes which occur at the buying company as a result of the order. This information includes the number of the identification of the cost category concerned, the type of cost as well as the actual account. The accounting information is given by the buying company so that the supplier can indicate it on the invoice, which in turn facilitates checking and auditing invoices at the buying company.

2005fd: New element

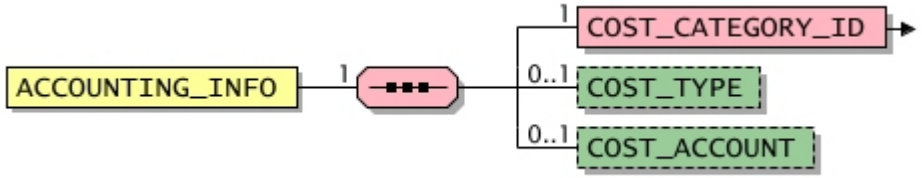

General					
Used in	Default value	Data type	Field length	Lang. specific	l.chg. in ver.
ARTICLE_DETAILS, **PRODUCT_DETAILS**	-	-	-	-	2005fd

Elements

Designation	Element name	Mandatory/ Optional	Single/ Multiple	Explanation	Default value	Data type	Field length	Lang. specific	l.chg. in ver.
Cost category	**COST_CATEGORY_ID - type**	Mandatory	Single	Number of the cost center to be charged or the project or work order to which the charge must be made. The type of cost category is fixed by the attribute "type". 2005fd: New element	-	**dtSTRING**	64	-	2005fd
Type of cost	**COST_TYPE**	Optional	Single	Information about the type of cost, e.g. investment, service, consumption, etc. 2005fd: New element	-	**dtSTRING**	64	-	2005fd
Cost account	**COST_ACCOUNT**	Optional	Single	Number of the main account to be charged 2005fd: New element	-	**dtSTRING**	64	-	2005fd

Copyright © 2022 BME e.V. - BMEcat® Version 2005.2
Copyright © 2010-2021 BME e.V. - BMEcat® Version 2005.1
Copyright © 2005-2009 BME e.V. - BMEcat® Version 2005
Copyright © 1998–2004 Fraunhofer IAO, Stuttgart; Universität Essen BLI - BMEcat® Version 1.2

Copyright © 2022 BME e.V. - BMEcat® Version 2005.2
Copyright © 2010-2021 BME e.V. - BMEcat® Version 2005.1
Copyright © 2005-2009 BME e.V. - BMEcat® Version 2005
Copyright © 1998–2004 Fraunhofer IAO, Stuttgart; Universität Essen BLI - BMEcat® Version 1.2

COST_CATEGORY_ID

(Cost category)

Number of the cost center to be charged or the project or work order to which the charge must be made.

The type of cost category is fixed by the attribute "type".

2005fd: New element

General					
Used in	Default value	Data type	Field length	Lang. specific	l.chg. in ver.
ACCOUNTING_INFO	-	**dtSTRING**	64	-	2005fd

Attributes								
Designation	Attribute name	Mandatory/ optional	Explanation	Default value	Data type	Field length	Lang. specific	l.chg. in ver.
Type of cost category	type	Optional	It is specified here whether the costs are to be charged to a cost center, project or work order. If the attribute is not used no exact specification is made. See also: **Permitted values for attribute "type"**	-	**dtSTRING**	20	-	2005fd

Permitted values for attribute "type"			
Designation	Attribute value	Explanation	l.chg. in ver.
Cost center	cost_center	The costs are charged to a cost center.	2005fd
Project	project	The costs are charged to a project.	2005fd
Work order	work_order	The costs are charged to a work order.	2005fd

Copyright © 2022 BME e.V. - BMEcat® Version 2005.2
Copyright © 2010-2021 BME e.V. - BMEcat® Version 2005.1
Copyright © 2005-2009 BME e.V. - BMEcat® Version 2005
Copyright © 1998–2004 Fraunhofer IAO, Stuttgart; Universität Essen BLI - BMEcat® Version 1.2

AGREEMENT_REF

(Skeleton agreement reference)

This element contains a reference to a skeleton agreement (**AGREEMENT**), which has been named in the document header.

2005fd: New element

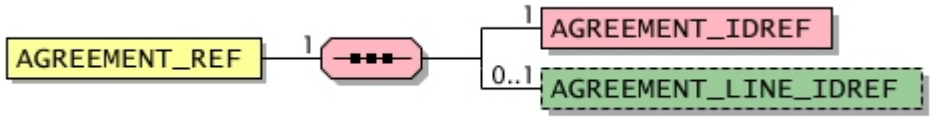

General					
Used in	Default value	Data type	Field length	Lang. specific	l.chg. in ver.
ARTICLE_DETAILS, **PRODUCT_DETAILS**	-	-	-	-	2005fd

Elements									
Designation	Element name	Mandatory/ Optional	Single/ Multiple	Explanation	Default value	Data type	Field length	Lang. specific	l.chg. in ver.
Skeleton agreement ID reference	**AGREEMENT_IDREF**	Mandatory	Single	Reference to the identifier (**AGREEMENT_ID**) of a skeleton agreement (**AGREEMENT**). 2005fd: New element	-	**dtSTRING**	50	-	2005fd
Line ID reference	**AGREEMENT_LINE_ IDREF**	Optional	Single	Reference to a line identifier (**AGREEMENT_LINE_ID**) of a skeleton agreement (**AGREEMENT**). 2005fd: New element	-	**dtSTRING**	50	-	2005fd

Copyright © 2022 BME e.V. - BMEcat® Version 2005.2
Copyright © 2010-2021 BME e.V. - BMEcat® Version 2005.1
Copyright © 2005-2009 BME e.V. - BMEcat® Version 2005
Copyright © 1998–2004 Fraunhofer IAO, Stuttgart; Universität Essen BLI - BMEcat® Version 1.2

PRODUCT_FEATURES

(Product features)

This element can be used to (1) describe a product by features and/or to (2) map a product to a group of a classification system.

(1) The product description by features is done using the **FEATURE** element. The feature has to named, and a value has to be assigned to this feature (**FVALUE_DETAILS**). It can be complemented by the unit of measurement (**FUNIT**). Moreover, it is possible to provide a detailed, complete definition of the feature (**CLASSIFICATION_SYSTEM_FEATURE_TEMPLATE**), i.e. data type and domain. If features are used that are pre-defined by a classification or feature system, then all features belonging to the same system haven to grouped in a common **PRODUCT_FEATURES** element. In this area, the respective system has to be referenced (**REFERENCE_FEATURE_SYSTEM_NAME**), eventually each feature has to be referenced by a **FREF** element.

All features that are not pre-defined by a classification or feature system have to be stored in the same **PRODUCT_FEATURES** element; this element may not contain **REFERENCE_FEATURE_SYSTEM_NAME**, **REFERENCE_FEATURE_GROUP_ID** or **REFERENCE_FEATURE_GROUP_NAME** elements; its **FEATURE**sub-elements may not include **FREF** elements.

For each **PRODUCT_FEATURES** area, the feature names must be unique, thus the values of all respective **FNAME** elements are different. By defining multiple **PRODUCT_FEATURES** areas it is, however, possible to use the same feature name for various purposes.

(2) The **PRODUCT_FEATURES** element is also used for mapping products to classifications groups. The respective classification system has to be referenced (**REFERENCE_FEATURE_SYSTEM_NAME**); eventually the classification group is either referenced by its identifier (**REFERENCE_FEATURE_GROUP_ID**) or directly named (**REFERENCE_FEATURE_GROUP_NAME**). It is not allowed to define two or more **PRODUCT_FEATURES** areas with references to the same classification system.

2005fd: This new element replaces with a modified semantics the **ARTICLE_FEATURES** element; it has been extended by the following sub-elements: **REFERENCE_FEATURE_GROUP_ID2**, **GROUP_PRODUCT_ORDER**
2005: The sub-element **CLASSIFICATION_GROUP_PRODUCTORDER** was renamed in **GROUP_PRODUCT_ORDER**.

Copyright © 2022 BME e.V. - BMEcat® Version 2005.2
Copyright © 2010-2021 BME e.V. - BMEcat® Version 2005.1
Copyright © 2005-2009 BME e.V. - BMEcat® Version 2005
Copyright © 1998–2004 Fraunhofer IAO, Stuttgart; Universität Essen BLI - BMEcat® Version 1.2

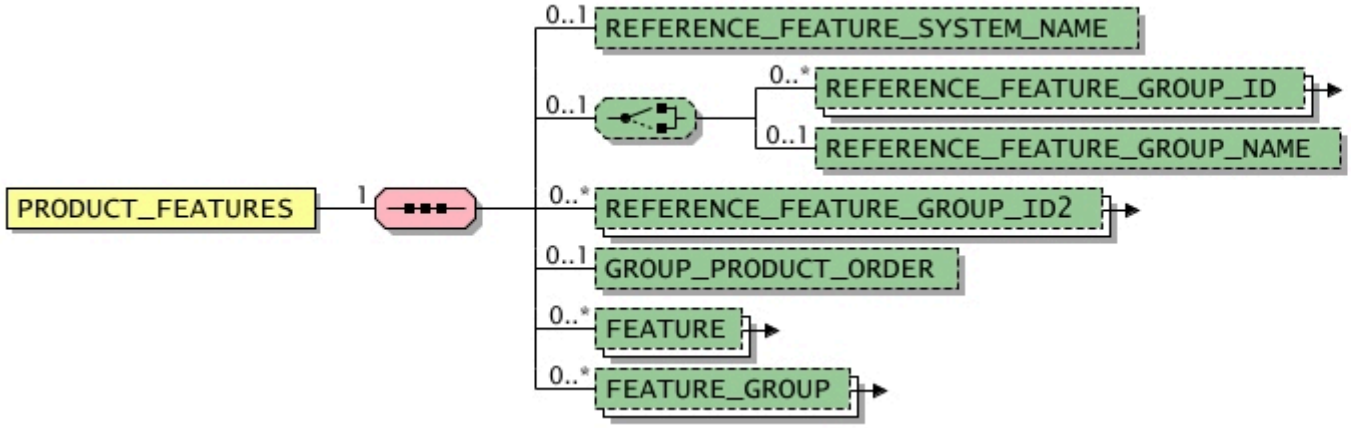

General

Used in	Default value	Data type	Field length	Lang. specific	l.chg. in ver.
PRODUCT in context T_NEW_CATALOG, **PRODUCT** in context T_UPDATE_PRODUCTS	-	-	-	-	2005

Elements

Designation	Element name	Mandatory/ Optional	Single/ Multiple	Explanation	Default value	Data type	Field length	Lang. specific	l.chg. in ver.
Classification or feature system	**REFERENCE_ FEATURE_SYSTEM_ NAME**	Optional	Single	Name of the referenced classification or feature system If the classification system is transferred by the **T_NEW_CATALOG** transaction and its **CLASSIFICATION_SYSTEM** element, the value of this element must be equal with the name defined in **CLASSIFICATION_SYSTEM_NAME**. Remark: The format for the name (**CLASSIFICATION_SYSTEM_NAME**) should comply with the following structure: "<Name>-<Major Version>.<Minor Version> See also: **Predefined values for element REFERENCE_FEATURE_SYSTEM_NAME** **Examples** ECLASS-4.1, UNSPSC-6.0801 `<REFERENCE_FEATURE_SYSTEM_NAME>ECLASS-4.1 </REFERENCE_FEATURE_SYSTEM_NAME>`	-	**dtSTRING**	80	-	-
Group reference	**REFERENCE_ FEATURE_GROUP_ID - type**	Optional	Multiple	Reference to the unique identifier of an existing group of the respective classification system; this element may only be used if the **REFERENCE_FEATURE_GROUP_ NAME** element is not used.	-	**dtSTRING**	60	-	-

Copyright © 2022 BME e.V. - BMEcat® Version 2005.2
Copyright © 2010-2021 BME e.V. - BMEcat® Version 2005.1
Copyright © 2005-2009 BME e.V. - BMEcat® Version 2005
Copyright © 1998–2004 Fraunhofer IAO, Stuttgart; Universität Essen BLI - BMEcat® Version 1.2

Elements

Designation	Element name	Mandatory/ Optional	Single/ Multiple	Explanation	Default value	Data type	Field length	Lang. specific	l.chg. in ver.
Group name reference	**REFERENCE_ FEATURE_GROUP_ NAME**	Optional	Single	Reference to the unique, though language-dependent name of an existing group of the respective classification system This element may only be used if the **REFERENCE_FEATURE_GROUP_ID** element is not used. Notice: The group can also be referenced by its language-independent identifier (see **REFERENCE_FEATURE_GROUP_ID**).	-	**dtMLSTRING**	60	Yes	-
Additional group reference	**REFERENCE_ FEATURE_GROUP_ID2 - type**	Optional	Multiple	This element provides an additional identifier of the same group which has already been referenced in the **REFERENCE_FEATURE_GROUP_ID** element. The element should be only if the classification system defines two different identifier for the same group. When classifying product according to eCl@ss, this element has to be filled with the eCl@ss field 'idcl' (primary key) and the 'type' attribute has to be set to 'flat'. 	-	**dtSTRING**	60	-	2005fd
Classification group product order	**GROUP_PRODUCT_ ORDER**	Optional	Single	Order number for the graphical user interface. When products of a group are listed they are always represented in ascending order (the first product is the one with the lowest number). 2005fd: New element 2005: This element was named **CLASSIFICATION_GROUP_PRODUCTORDER** in BMEcat 2005 final draft, now it is named **GROUP_PRODUCT_ORDER**.	-	**dtINTEGER**	-	-	2005
Product feature	**FEATURE**	Optional	Multiple	Information about a single product feature 	-	-	-	-	2005.2
aspect class	**FEATURE_GROUP - featureGroupType**	Optional	Multiple	References an aspect class from a classification system and contains the property values of this aspect class. 	-	-	-	-	2005.1

Predefined values for element REFERENCE_FEATURE_SYSTEM_NAME

Designation	Element value	Explanation	l.chg. in ver.
CPV	CPV-yyyy-mm-dd	Reference to the classification system CPV (Common Procurement Vocabulary) with version date (e.g., CPV-2003-12-16); see siehe **http://simap.eu.int**	2005fd

Copyright © 2022 BME e.V. - BMEcat® Version 2005.2
Copyright © 2010-2021 BME e.V. - BMEcat® Version 2005.1
Copyright © 2005-2009 BME e.V. - BMEcat® Version 2005
Copyright © 1998–2004 Fraunhofer IAO, Stuttgart; Universität Essen BLI - BMEcat® Version 1.2

Predefined values for element REFERENCE_FEATURE_SYSTEM_NAME			
Designation	Element value	Explanation	l.chg. in ver.
eCl@ss	ECLASS-x.y	Reference to the classification system eCl@ss with major version x and minor version y (e.g., ECLASS-5.1); see **http://www.eclass-online.com**	-
eOTD	EOTD-yyyy-mm-dd	Reference to the classification system eOTD (ECCMA Open Technical Dictionary) with version date (e.g., EOTD-2004-08-01); see **http://www.eccma.org**	2005fd
ETIM	ETIM-x.y	Reference to the classification system ETIM with major version x and minor version y (e.g., ETIM-2.0); see **http://www.etim.de**	-
GPC	GPC-x.y	Reference to the classification system EAN.UCC GPC (Global Product Classification) with major version x and minor version y (e.g., GPC-4.0); see **http://www.gs1.org**	2005fd
profiCl@ss	PROFICLASS-x.y	Reference to the classification system profiCl@ss with major version x and minor version y (e.g., PROFICLASS-2.1); see **http://www.proficlass.de**	2005fd
RNTD	RNTD-x.y	Reference to the classification system RNTD (RosettaNet Technical Dictionary) with major version x and minor version y (e.g., RNTD-4.0); see **http://www.rosettanet.org**	2005fd
RUS	RUS-x.y	Reference to the classification system RUS (Requisite Unifying Structure) with major version x and minor version y (e.g., RUS-4.0); see **http://rusportal.requisite.com**	2005fd
UNSPSC	UNSPSC-x.yyyy	Reference to the classification system UNSPSC with major version x and minor version y (e.g., UNSPSC-6.0801); see **http://www.unspsc.org**	-
Proprietary classification system	udf_NAME-x.y	Reference to a proprietary (non-standard) classification system. The value has to start with 'udf_' followed by the classification system name in capital letters, hyphen, and version (major version x and minor version y). For example: udf_MYSYSTEM-3.0. The length of the name is limited to 72 characters; the version to 7 characters.	-
Other classification system	User defined value, format: [\w\-\.]{1,80}	Other standard classification system, which is not pre-defined in BMEcat, can be described in a similar way: The name of the system in capital, followed by a hyphen and the version information. For instance, NAME-3.4. The length of the name is limited to 72 characters. The version information, where major and minor version are separated by a dot, is limited to 7 characters.	2005fd

Example

In this example, a stacking tray is described according to two different classification systems. However, the description according to eCl@ss serves only as an example, i.e. not all features are specified.

```
<PRODUCT_FEATURES>
    <REFERENCE_FEATURE_SYSTEM_ID>udf_MeBuKla-0.97</REFERENCE_FEATURE_SYSTEM_ID>
    <REFERENCE_FEATURE_GROUP_NAME>Stacking tray</REFERENCE_FEATURE_GROUP_NAME>
    <FEATURE>
        <FNAME>Size</FNAME>
        <FVALUE>DIN A4</FVALUE>
    </FEATURE>
    <FEATURE>
        <FNAME>Width</FNAME>
        <FVALUE>240</FVALUE>
        <FUNIT>mm</FUNIT>
    </FEATURE>
    <FEATURE>
        <FNAME>Material</FNAME>
        <FVALUE>Kunststoff</FVALUE>
    </FEATURE>
```

Copyright © 2022 BME e.V. - BMEcat® Version 2005.2
Copyright © 2010-2021 BME e.V. - BMEcat® Version 2005.1
Copyright © 2005-2009 BME e.V. - BMEcat® Version 2005
Copyright © 1998–2004 Fraunhofer IAO, Stuttgart; Universität Essen BLI - BMEcat® Version 1.2

```
    <FEATURE>
        <FNAME>Color</FNAME>
        <FVALUE>rot</FVALUE>
    </FEATURE>
</PRODUCT_FEATURES>
<PRODUCT_FEATURES>
    <REFERENCE_FEATURE_SYSTEM_NAME>ECLASS-5.1</REFERENCE_FEATURE_SYSTEM_NAME>
    <REFERENCE_FEATURE_GROUP_ID>24-29-11-01</REFERENCE_FEATURE_GROUP_ID>
    <REFERENCE_FEATURE_GROUP_ID2 type="flat">AKF56000201</REFERENCE_FEATURE_GROUP_ID2>
    <FEATURE>
        <FREF>BAF016001</FREF>
        <FVALUE>240</FVALUE>
    </FEATURE>
    <FEATURE>
        <FREF>BAA351001</FREF>
        <FVALUE>red</FVALUE>
    </FEATURE>
    <FEATURE>
        <FREF>BAF302001</FREF>
        <FVALUE>DIN A4</FVALUE>
    </FEATURE>
</PRODUCT_FEATURES>
```

Copyright © 2022 BME e.V. - BMEcat® Version 2005.2
Copyright © 2010-2021 BME e.V. - BMEcat® Version 2005.1
Copyright © 2005-2009 BME e.V. - BMEcat® Version 2005
Copyright © 1998–2004 Fraunhofer IAO, Stuttgart; Universität Essen BLI - BMEcat® Version 1.2

REFERENCE_FEATURE_GROUP_ID

(Group reference)

This element contains a reference to the unique identifier of an existing group of the respective classification system

The group can also be referenced by its unique, though language-dependent name (see **REFERENCE_FEATURE_GROUP_NAME**). In this case, the **REFERENCE_FEATURE_GROUP_ID** element may not be used.

General					
Used in	Default value	Data type	Field length	Lang. specific	l.chg. in ver.
ARTICLE_FEATURES, **FEATURE_GROUP**, **PRODUCT_FEATURES**	-	**dtSTRING**	60	-	-

Attributes								
Designation	Attribute name	Mandatory/ optional	Explanation	Default value	Data type	Field length	Lang. specific	l.chg. in ver.
Codification	type	Optional	Determines whether the group ID describes the position of the respective group in the hierarchy. * 2005fd: New attribute See also: **Permitted values for attribute "type"**	-	**dtSTRING**	20	-	2005fd

Permitted values for attribute "type"			
Designation	Attribute value	Explanation	l.chg. in ver.
flat	flat	The group ID does not describe the position of the respective group in the hierarchy.	2005fd
Hierarchy	hierarchy	The group ID describes the position of the respective group in the hierarchy.	2005fd

Copyright © 2022 BME e.V. - BMEcat® Version 2005.2
Copyright © 2010-2021 BME e.V. - BMEcat® Version 2005.1
Copyright © 2005-2009 BME e.V. - BMEcat® Version 2005
Copyright © 1998–2004 Fraunhofer IAO, Stuttgart; Universität Essen BLI - BMEcat® Version 1.2

REFERENCE_FEATURE_GROUP_ID2

(Additional group reference)

This element provides an additional identifier of the same group which has already been referenced in the **REFERENCE_FEATURE_GROUP_ID** element. The element should be only if the classification system defines two different identifier for the same group.

When classifying product according to eCl@ss, this element has to be filled with the eCl@ss field 'idcl' (primary key) and the 'type' attribute has to be set to 'flat'.

2005fd: New element

General					
Used in	Default value	Data type	Field length	Lang. specific	l.chg. in ver.
ARTICLE_FEATURES, **PRODUCT_FEATURES**	-	**dtSTRING**	60	-	2005fd

Attributes								
Designation	Attribute name	Mandatory/ optional	Explanation	Default value	Data type	Field length	Lang. specific	l.chg. in ver.
Codification	type	Optional	Determines whether the group ID describes the position of the respective group in the hierarchy. See also: **Permitted values for attribute "type"**	-	**dtSTRING**	20	-	2005fd

Permitted values for attribute "type"			
Designation	Attribute value	Explanation	l.chg. in ver.
flat	flat	The group ID does not describe the position of the respective group in the hierarchy.	2005fd
Hierarchy	hierarchy	The group ID describes the position of the respective group in the hierarchy.	2005fd

Copyright © 2022 BME e.V. - BMEcat® Version 2005.2
Copyright © 2010-2021 BME e.V. - BMEcat® Version 2005.1
Copyright © 2005-2009 BME e.V. - BMEcat® Version 2005
Copyright © 1998–2004 Fraunhofer IAO, Stuttgart; Universität Essen BLI - BMEcat® Version 1.2

FEATURE

(Product feature)

This element contains information on a product features (i.e., feature name, data type, explainations, domain).

Using the VARIANTS feature it is also possible to describe variants of the product.

2005fd: The element was revised and the following sub-elements were added: **FREF** (in 2005fd CLASSIFICATION_FEATURE_REF), **CLASSIFICATION_SYSTEM_FEATURE_TEMPLATE**, **VALUE_IDREF**, **FVALUE_TYPE**
2005: The sub-element **CLASSIFICATION_FEATURE_REF** was renamed to **FREF**. The sub-element **CLASSIFICATION_SYSTEM_FEATURE_TEMPLATE** was replaced with the fully identical element **FTEMPLATE**. The sub-element **FREF** was replaced with the fully identical element **FT_IDREF**.
2005.1: The sub-elements **ID**, **PARENT_ID** and **FEATURE** were added.
2005.2: The sub-elements **FVALUE** und **VALUE_IDREF** can be used both at the same time and without a bounded occurence.

Copyright © 2022 BME e.V. - BMEcat® Version 2005.2
Copyright © 2010-2021 BME e.V. - BMEcat® Version 2005.1
Copyright © 2005-2009 BME e.V. - BMEcat® Version 2005
Copyright © 1998–2004 Fraunhofer IAO, Stuttgart; Universität Essen BLI - BMEcat® Version 1.2

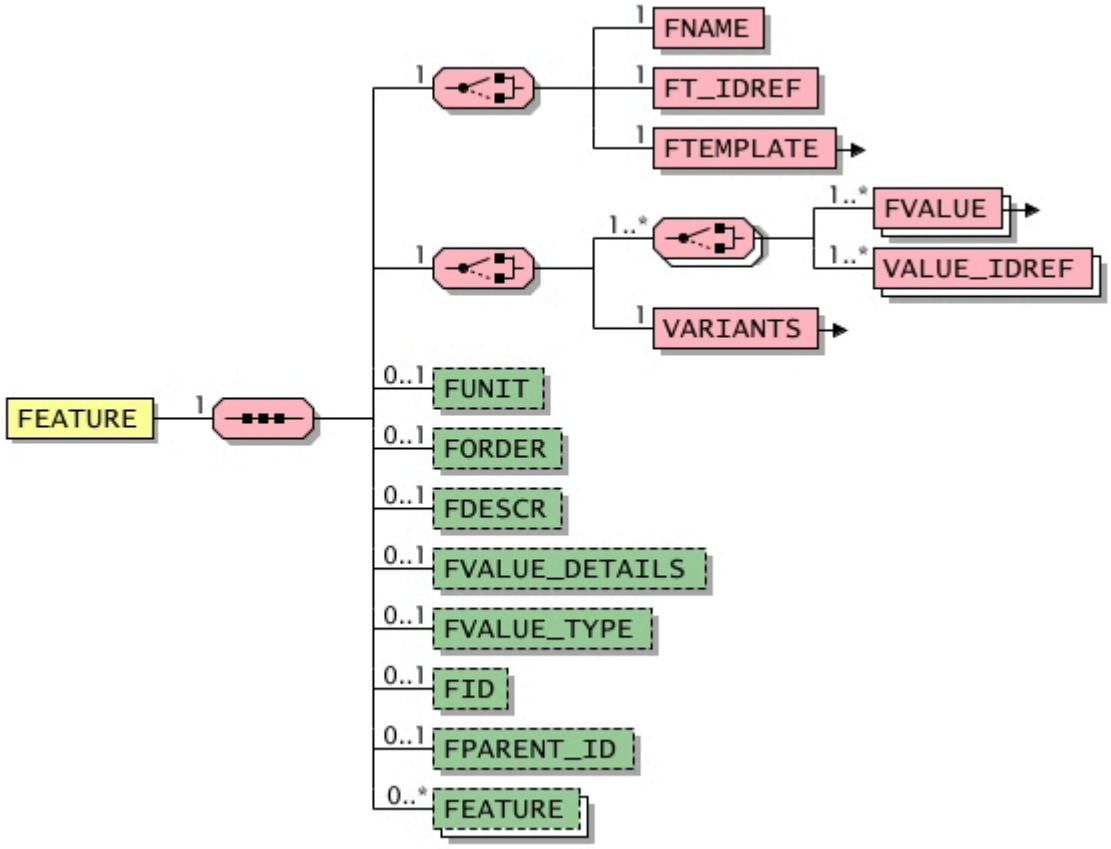

General

Used in	Default value	Data type	Field length	Lang. specific	l.chg. in ver.
ARTICLE_FEATURES, **FEATURE**, **FEATURE_GROUP**, **PRODUCT_FEATURES**	-	-	-	-	2005.2

Elements

Designation	Element name	Mandatory/ Optional	Single/ Multiple	Explanation	Default value	Data type	Field length	Lang. specific	l.chg. in ver.
Feature name	**FNAME**	Mandatory	Single	Unique name used to describe the feature within the **PRODUCT_FEATURES** element. If in this feature is part of a referenced classification or feature group system, then the feature name must correspond to the name that is defined in the respective system.	-	**dtMLSTRING**	80	Yes	2005.2

Copyright © 2022 BME e.V. - BMEcat® Version 2005.2
Copyright © 2010-2021 BME e.V. - BMEcat® Version 2005.1
Copyright © 2005-2009 BME e.V. - BMEcat® Version 2005
Copyright © 1998–2004 Fraunhofer IAO, Stuttgart; Universität Essen BLI - BMEcat® Version 1.2

Elements									
Designation	Element name	Mandatory/ Optional	Single/ Multiple	Explanation	Default value	Data type	Field length	Lang. specific	l.chg. in ver.
				This element is language-dependent, thus the feature name has to be given in the language that is set in the catalog header (**HEADER**). 2005.2: The field length was increased to 80 characters, as standard classification systems have longer feature names.					
Feature reference	**FT_IDREF**	Mandatory	Single	Reference to the unique ID of a feature (see**CLASSIFICATION_SYSTEM_FEATURE_TEMPLATE**)	-	**dtSTRING**	60	-	-
Feature definition	**FTEMPLATE**	Mandatory	Single	Definition of the feature 	-	-	-	-	2005
Feature value	**FVALUE** **- lang** **- locale**	Mandatory	Single	Actual value(s) of the respective feature This element may only be specified if the element **VARIANTS** is not specified. **FVALUE** can occur as a multiple value, e.g. for describing a value range (Range) or a set of values (Set). If the element references a standard classification system which also pre-defines possible feature values for (alpha-numerical) features, the feature values must be derived from these pre-defined values. As the standard classification systems defines the length of the feature value, the length of the feature value is not restricted. 	-	**dtMLSTRING**	-	Yes	1.2_fd
Reference to a value	**VALUE_IDREF**	Mandatory	Multiple	Reference to the unique identifier of a value. The reference must point to a value defined in the document (element **ALLOWED_VALUE** identified by **ALLOWED_VALUE_ID**). This element can only be used for defining features of a classification system; it can not be used for defining features directly for products (**PRODUCT_FEATURES**) or for configurations (**CONFIG_FEATURE**). 2005fd: New element	-	**dtSTRING**	60	-	2005fd
Variants	**VARIANTS**	Mandatory	Single	Designation of the variant This element may only be specified if the element **FVALUE** is not specified.	-	-	-	-	1.2_fd
Feature unit	**FUNIT**	Optional	Single	Unit of measurement of the feature Standard measuring units should be used if possible (refer also to Type **dtUNIT**).	-	**dtSTRING**	20	-	-

Copyright © 2022 BME e.V. - BMEcat® Version 2005.2
Copyright © 2010-2021 BME e.V. - BMEcat® Version 2005.1
Copyright © 2005-2009 BME e.V. - BMEcat® Version 2005
Copyright © 1998–2004 Fraunhofer IAO, Stuttgart; Universität Essen BLI - BMEcat® Version 1.2

Elements

Designation	Element name	Mandatory/ Optional	Single/ Multiple	Explanation	Default value	Data type	Field length	Lang. specific	l.chg. in ver.
				If the element references a standard classification system which also pre-defines feature units for (numerical) features, the entry for the measuring unit in this element must correspond to the one pre-defined or the element can be left empty.					
Feature order	**FORDER**	Optional	Single	Order in which the feature must appear in the referenced group in the target system; the order is fixed using ascending integer values If the element references a standard classification system which also pre-defines feature orders for features, the entry for the order in this element must correspond to the one pre-defined or the element can be left empty.	-	**dtINTEGER**	-	-	-

Feature description	**FDESCR**	Optional	Single	Element which can be used to describe the exact meaning of the feature;
				the purpose of this element is not to explain the value of the feature in more detail.
				
				Example
				`<FNAME>Color</FNAME>`
				`<FVALUE>Red</FVALUE>`
				`<FDESCR>The feature color specifies the color of the table top and not the color of the table legs.</FDESCR>`
					-	**dtMLSTRING**	250	Yes	1.2_fd

Additional details about the feature value	**FVALUE_DETAILS**	Optional	Single	Element which can be used to give more details about the feature value; thus the purpose of this element is to explain the value of the feature in more detail (not the explanation of the feature itself).
				This element is mainly useful, for example, for transferring manufacturer-specific value descriptions whenever only standard values are permitted as feature values in the given classification system.
				
				Example
				`<FNAME>Color</FNAME>`
				`<FVALUE>White</FVALUE>`
				`<FVALUE_DETAILS>Polar</FVALUE_DETAILS>`
					-	**dtMLSTRING**	250	Yes	1.2_fd

Feature value type	**FVALUE_TYPE**	Optional	Single	Indicates how the feature domain is structured. 2005fd: New element See also: **Permitted values for element FVALUE_TYPE**	-	**dtSTRING**	20	-	2005fd
Id of the feature	**FID**	Optional	Single	Idenditifer of the feature 2005.1: New Element	-	**dtSTRING**	-	-	2005.1
Id of the parent feature	**FPARENT_ID**	Optional	Single	Idendifier of the referrerd superordnate feature	-	**dtSTRING**	-	-	2005.1

Copyright © 2022 BME e.V. - BMEcat® Version 2005.2
Copyright © 2010-2021 BME e.V. - BMEcat® Version 2005.1
Copyright © 2005-2009 BME e.V. - BMEcat® Version 2005
Copyright © 1998–2004 Fraunhofer IAO, Stuttgart; Universität Essen BLI - BMEcat® Version 1.2

Elements									
Designation	Element name	Mandatory/ Optional	Single/ Multiple	Explanation	Default value	Data type	Field length	Lang. specific	l.chg. in ver.
				 2005.1: New element					
Product feature	**FEATURE**	Optional	Multiple	This element contains information on a product features (i.e., feature name, data type, explainations, domain). Using the VARIANTS feature it is also possible to describe variants of the product. 2005fd: The element was revised and the following sub-elements were added: **FREF** (in 2005fd CLASSIFICATION_FEATURE_REF), **CLASSIFICATION_SYSTEM_FEATURE_TEMPLATE**, **VALUE_IDREF**, **FVALUE_TYPE** 2005: The sub-element **CLASSIFICATION_FEATURE_REF** was renamed to **FREF**. The sub-element **CLASSIFICATION_SYSTEM_FEATURE_TEMPLATE** was replaced with the fully identical element **FTEMPLATE**. The sub-element **FREF** was replaced with the fully identical element **FT_IDREF**. 2005.1: The sub-elements **ID**, **PARENT_ID** and **FEATURE** were added. 2005.2: The sub-elements **FVALUE** und **VALUE_IDREF** can be used both at the same time and without a bounded occurence.	-	-	-	-	2005.2

Permitted values for element FVALUE_TYPE			
Designation	Element value	Explanation	l.chg. in ver.
Choice of values	choice	Indicates that the feature domain is a set of values from which one values must be chosen.	2005fd
Range of values	range	Indicates that the feature domain is a range between two values.	2005fd
Set of values	set	Indicates that the feature domain is a set of values.	2005fd

Copyright © 2022 BME e.V. - BMEcat® Version 2005.2
Copyright © 2010-2021 BME e.V. - BMEcat® Version 2005.1
Copyright © 2005-2009 BME e.V. - BMEcat® Version 2005
Copyright © 1998–2004 Fraunhofer IAO, Stuttgart; Universität Essen BLI - BMEcat® Version 1.2

FTEMPLATE

(Feature definition)

This element defines a feature, it does not define the feature value though.

2005: New element

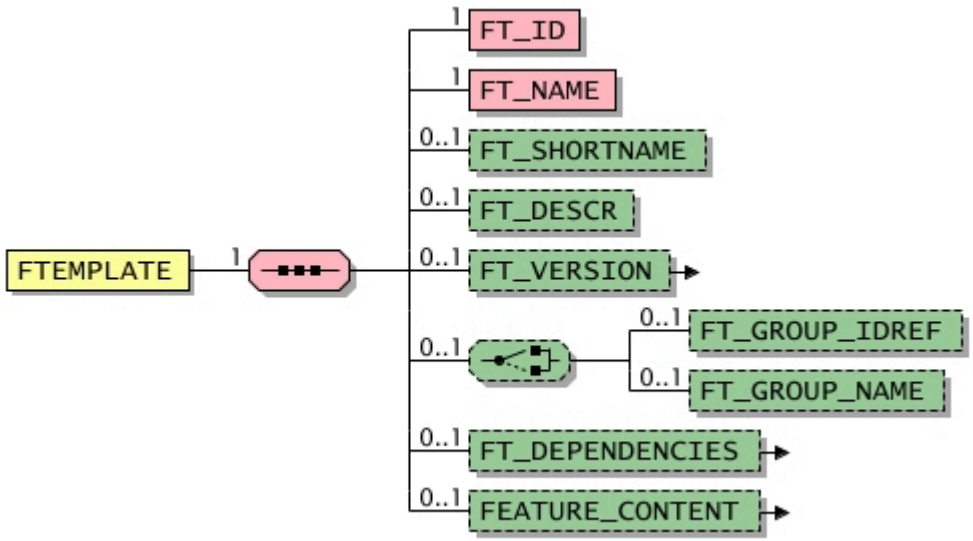

General					
Used in	Default value	Data type	Field length	Lang. specific	l.chg. in ver.
CONFIG_FEATURE, **FEATURE**	-	-	-	-	2005

Elements									
Designation	Element name	Mandatory/ Optional	Single/ Multiple	Explanation	Default value	Data type	Field length	Lang. specific	l.chg. in ver.
Feature identifier	**FT_ID**	Mandatory	Single	Unique identifier of the feature. This identifier ist required for referencing the feature from a classification group.	-	**dtSTRING**	60	-	-
Feature name	**FT_NAME**	Mandatory	Single	This element defines the feature name.	-	**dtMLSTRING**	80	Yes	2005fd

Copyright © 2022 BME e.V. - BMEcat® Version 2005.2
Copyright © 2010-2021 BME e.V. - BMEcat® Version 2005.1
Copyright © 2005-2009 BME e.V. - BMEcat® Version 2005
Copyright © 1998–2004 Fraunhofer IAO, Stuttgart; Universität Essen BLI - BMEcat® Version 1.2

Elements

Designation	Element name	Mandatory/ Optional	Single/ Multiple	Explanation	Default value	Data type	Field length	Lang. specific	l.chg. in ver.
				2005fd: The maximum length has been extended from 60 characters to 80 characters.					
Feature short name	**FT_SHORTNAME**	Optional	Single	Short name of the feature in addition to its name 2005fd: New element	-	**dtMLSTRING**	80	Yes	2005fd

Feature description	**FT_DESCR**	Optional	Single	Description of the feature and its semantics; it does not describe the value of the feature.
				This element is especially usefull for describing user-defined, non-standardized features.
				2005fd: The maximum length has been extended from 250 characters to 16,000 characters.
				Example
				`<FT_NAME>Colour</FT_NAME>`
				`<FT_DESCR>The feature color represents the color of the tabletop, but not the colour of the table legs.</FT_DESCR>`
					-	**dtMLSTRING**	16000	Yes	2005fd

Version of the feature	**FT_VERSION**	Optional	Single	Detailled information on the version of the feature	-	-	-	-	2005fd
Feature group ID reference	**FT_GROUP_IDREF**	Optional	Single	Reference to the unique ID of a feature group. The reference must point to a **FT_GROUP_ID**, which has been defined in the **FT_GROUP** element for the respective classification system. 2005: New element	-	**dtSTRING**	60	-	2005
Feature group name	**FT_GROUP_NAME**	Optional	Single	Specifies the name of the feature group; e.g., "Technical features" 2005: New element	-	**dtMLSTRING**	80	Yes	2005
Feature dependencies	**FT_DEPENDENCIES**	Optional	Single	List of features on which the current feature depends	-	-	-	-	2005

Copyright © 2022 BME e.V. - BMEcat® Version 2005.2
Copyright © 2010-2021 BME e.V. - BMEcat® Version 2005.1
Copyright © 2005-2009 BME e.V. - BMEcat® Version 2005
Copyright © 1998–2004 Fraunhofer IAO, Stuttgart; Universität Essen BLI - BMEcat® Version 1.2

Elements

Designation	Element name	Mandatory/ Optional	Single/ Multiple	Explanation	Default value	Data type	Field length	Lang. specific	l.chg. in ver.
Feature content definition	**FEATURE_CONTENT**	Optional	Single	Detailled information on the feature content, e.g., data type, unit of measurement, domain of values, synonyms, and many more characteristics	-	-	-	-	2005

Copyright © 2022 BME e.V. - BMEcat® Version 2005.2
Copyright © 2010-2021 BME e.V. - BMEcat® Version 2005.1
Copyright © 2005-2009 BME e.V. - BMEcat® Version 2005
Copyright © 1998–2004 Fraunhofer IAO, Stuttgart; Universität Essen BLI - BMEcat® Version 1.2

FVALUE

(Feature value)

Actual value(s) of the respective feature

This element may only be specified if the element **VARIANTS** is not specified.

FVALUE can occur as a multiple value, e.g. for describing a value range (Range) or a set of values (Set).

If the element references a standard classification system which also pre-defines possible feature values for (alpha-numerical) features, the feature values must be derived from these pre-defined values. As the standard classification systems defines the length of the feature value, the length of the feature value is not restricted.

2005.2: The length of the field value is not restricted anymore, as standard classification systems define the lenght of feature values.

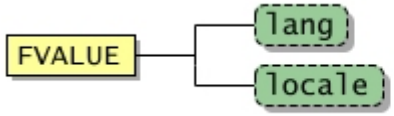

General					
Used in	Default value	Data type	Field length	Lang. specific	l.chg. in ver.
FEATURE, **VARIANT**	-	**dtMLSTRING**	-	Yes	2005.1

Attributes								
Designation	Attribute name	Mandatory/ optional	Explanation	Default value	Data type	Field length	Lang. specific	l.chg. in ver.
Use language.	lang	Optional	Code, representing the use langauge.	-	**dtLANG**	-	-	-
Use language variant.	locale	Optional	Code representing the used langauge variant.	-	**dtLOCALE**	-	-	-

Example 1

```
<FNAME>Color</FNAME>
<FVALUE>red</FVALUE>
```

Example 2

```
<FNAME>Voltage (adjustable from/to)</FNAME>
<FVALUE>6</FVALUE>
<FVALUE>12</FVALUE>
```

Copyright © 2022 BME e.V. - BMEcat® Version 2005.2
Copyright © 2010-2021 BME e.V. - BMEcat® Version 2005.1
Copyright © 2005-2009 BME e.V. - BMEcat® Version 2005
Copyright © 1998–2004 Fraunhofer IAO, Stuttgart; Universität Essen BLI - BMEcat® Version 1.2

```
<FUNIT>V</FUNIT>
```

Example 3

```
<FNAME>Test mark</FNAME>
<FVALUE>VDE</FVALUE>
<FVALUE>CE</FVALUE>
```

Example 1:
The short description in the **DESCRIPTION_SHORT** element is provided both in German and English . Note that the "lang" attribute in the second **PRODUCT_DETAILS** element is not necessary, if the default language of the catalog (**CATALOG**) has been set to German.

```
<PRODUCT_DETAILS>
    <DESCRIPTION_SHORT lang="deu">Schraubendreher</DESCRIPTION_SHORT>
    <DESCRIPTION_SHORT lang="eng">Screw driver</DESCRIPTION_SHORT>
</PRODUCT_DETAILS>
...
<PRODUCT_DETAILS>
    <DESCRIPTION_SHORT>Bohrer</DESCRIPTION_SHORT>
    <DESCRIPTION_SHORT lang="eng">Drill</DESCRIPTION_SHORT>
</PRODUCT_DETAILS>
```

Example 2:
The short description in the **DESCRIPTION_SHORT** element is provided both in German and English . Note that the "lang" attribute in the second **PRODUCT_DETAILS** element is not necessary, if the default language of the catalog (**CATALOG**) has been set to German.

```
<PRODUCT>
...     <PRODUCT_FEATURES>
...         <FEATURE>
            <FTEMPLATE>
                <FT_ID>EXAMPLE-ID-123</FT_ID>
                <FT_NAME locale="en">Name</FT_NAME>
                <FT_NAME locale="de">Name</FT_NAME>
                <FT_NAME locale="fr">Nom</FT_NAME>
                <FT_NAME locale="zh-Hans">##</FT_NAME>
                <FT_NAME locale="zh-Latn">míngch#ng</FT_NAME>
            </FTEMPLATE>
            <FVALUE locale="en">Abricot</FVALUE>
            <FVALUE locale="de-AT">Marille</FVALUE>
            <FVALUE locale="de-DE">Aprikose</FVALUE>
            <FVALUE locale="fr">Abricot</FVALUE>
            <FVALUE locale="zh-Hans">#</FVALUE>
            <FVALUE locale="zh-Latn">xìngzi</FVALUE>
        </FEATURE>
    </PRODUCT_FEATURES>
... </PRODUCT>
```

Copyright © 2022 BME e.V. - BMEcat® Version 2005.2
Copyright © 2010-2021 BME e.V. - BMEcat® Version 2005.1
Copyright © 2005-2009 BME e.V. - BMEcat® Version 2005
Copyright © 1998–2004 Fraunhofer IAO, Stuttgart; Universität Essen BLI - BMEcat® Version 1.2

VARIANTS

(Variants)

This element describes variants of products. The product variants have no effect on the price of the product. The variants are described using the element **VARIANT**. These variants expand the basic product number (**SUPPLIER_PID**) of the product by a suffix. **VARIANTS** is used to link together different products of the same price and with only a few different feature values by expanding the basic product number by a few positions depending on the variant chosen in order to achieve unique identification of the variant.

The basic product number must already be unique when used alone even if it is to be used with variants.

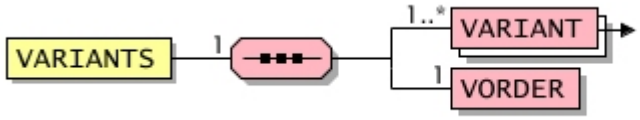

General					
Used in	Default value	Data type	Field length	Lang. specific	l.chg. in ver.
FEATURE	-	-	-	-	1.2_fd

Elements									
Designation	Element name	Mandatory/ Optional	Single/ Multiple	Explanation	Default value	Data type	Field length	Lang. specific	l.chg. in ver.
Variant	**VARIANT**	Mandatory	Multiple	Description of a variant (feature value and product number supplement)	-	-	-	-	-
Variant order	**VORDER**	Mandatory	Single	Defines which order is to be used to link the product number supplement (**SUPPLIER_AID_SUPPLEMENT**) with the basic product number (SUPPLIER_PID); the product number expansions are linked to the value **VORDER** in ascending order.	-	**dtINTEGER**	-	-	-

Copyright © 2022 BME e.V. - BMEcat® Version 2005.2
Copyright © 2010-2021 BME e.V. - BMEcat® Version 2005.1
Copyright © 2005-2009 BME e.V. - BMEcat® Version 2005
Copyright © 1998–2004 Fraunhofer IAO, Stuttgart; Universität Essen BLI - BMEcat® Version 1.2

VARIANT

(Variant)

Description of a possible variant using the relevant feature values and the corresponding article number supplement. For a more detailed explanation please refer to the following Example.

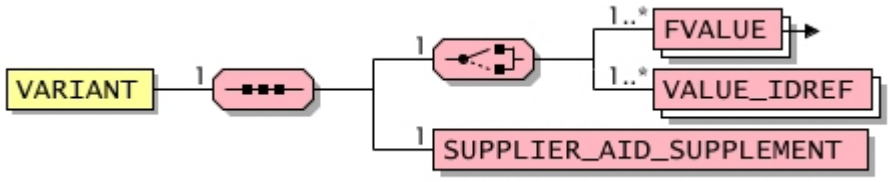

General

Used in	Default value	Data type	Field length	Lang. specific	l.chg. in ver.
VARIANTS	-	-	-	-	-

Elements

Designation	Element name	Mandatory/ Optional	Single/ Multiple	Explanation	Default value	Data type	Field length	Lang. specific	l.chg. in ver.
Feature value	**FVALUE** **- lang** **- locale**	Mandatory	Single	Actual value(s) of the respective feature This element may only be specified if the element **VARIANTS** is not specified. **FVALUE** can occur as a multiple value, e.g. for describing a value range (Range) or a set of values (Set). If the element references a standard classification system which also pre-defines possible feature values for (alpha-numerical) features, the feature values must be derived from these pre-defined values. As the standard classification systems defines the length of the feature value, the length of the feature value is not restricted. *	-	**dtMLSTRING**	-	Yes	1.2_fd
Reference to a value	**VALUE_IDREF**	Mandatory	Multiple	Reference to the unique identifier of a value. The reference must point to a value defined in the document (element **ALLOWED_VALUE** identified by **ALLOWED_VALUE_ID**). This element can only be used for defining features of a classification system; it can not be used for defining features directly for products (**PRODUCT_FEATURES**) or for configurations (**CONFIG_FEATURE**).	-	**dtSTRING**	60	-	2005fd

Copyright © 2022 BME e.V. - BMEcat® Version 2005.2
Copyright © 2010-2021 BME e.V. - BMEcat® Version 2005.1
Copyright © 2005-2009 BME e.V. - BMEcat® Version 2005
Copyright © 1998–2004 Fraunhofer IAO, Stuttgart; Universität Essen BLI - BMEcat® Version 1.2

Elements

Designation	Element name	Mandatory/ Optional	Single/ Multiple	Explanation	Default value	Data type	Field length	Lang. specific	I.chg. in ver.
				2005fd: New element					
Article number supplement	**SUPPLIER_AID_ SUPPLEMENT**	Mandatory	Single	For every selection value within one variant an unique supplement of the basic product number must be transferred. Through the link of all the supplements a further unique number must be created. If there are several **VARIANTS** elements defined for one article, particular care must be taken that the supplements to the article numbers can be clearly separated from the article number resulting from the selection made. This can be achieved, for example, if the supplement is always a fixed length (always 3 figures "003"=black) or by integrating a hyphen ("-red"). The length of the basic product number + the length of all supplements may not be longer than 32 characters (see field length of **SUPPLIER_PID**). **Example** The elements **FEATURE** and **VARIANTS** must be used to describe a T-Shirt which is available in four colors and three sizes:	-	**dtSTRING**	31	-	-

```
<SUPPLIER_AID>33-Ingo-P</SUPPLIER_AID>
...
<PRODUCT_FEATURES>
    <FEATURE>
        <FNAME>Color</FNAME>
        <VARIANTS>
            <VARIANT>
                <FVALUE>Red</FVALUE>
                <SUPPLIER_AID_SUPPLEMENT>006
</SUPPLIER_AID_SUPPLEMENT>
            </VARIANT>
            <VARIANT>
                <FVALUE>Black</FVALUE>
                <SUPPLIER_AID_SUPPLEMENT>001
</SUPPLIER_AID_SUPPLEMENT>
            </VARIANT>
            <VARIANT>
                <FVALUE>Blue</FVALUE>
                <SUPPLIER_AID_SUPPLEMENT>004
</SUPPLIER_AID_SUPPLEMENT>
            </VARIANT>
            <VARIANT>
                <FVALUE>Orange</FVALUE>
```

Copyright © 2022 BME e.V. - BMEcat® Version 2005.2
Copyright © 2010-2021 BME e.V. - BMEcat® Version 2005.1
Copyright © 2005-2009 BME e.V. - BMEcat® Version 2005
Copyright © 1998–2004 Fraunhofer IAO, Stuttgart; Universität Essen BLI - BMEcat® Version 1.2

Elements

Designation	Element name	Mandatory/ Optional	Single/ Multiple	Explanation	Default value	Data type	Field length	Lang. specific	I.chg. in ver.
				<SUPPLIER_AID_SUPPLEMENT>100 </SUPPLIER_AID_SUPPLEMENT> </VARIANT> <VORDER>1</VORDER> </VARIANTS> <FORDER>1</FORDER> <FDESCR>Farbe des T-Shirts</FDESCR> </FEATURE> <FEATURE> <FNAME>Grösse</FNAME> <VARIANTS></VARIANTS> <FORDER>2</FORDER> <FDESCR>Color of the T-Shirt</FDESCR> </FEATURE> </PRODUCT_FEATURES>					

Copyright © 2022 BME e.V. - BMEcat® Version 2005.2
Copyright © 2010-2021 BME e.V. - BMEcat® Version 2005.1
Copyright © 2005-2009 BME e.V. - BMEcat® Version 2005
Copyright © 1998–2004 Fraunhofer IAO, Stuttgart; Universität Essen BLI - BMEcat® Version 1.2

FEATURE_GROUP

(aspect class)

A aspect allows a additional categorization of product properties. Such a concept can be found in eCl@ss 7.0. With a aspect a product can be additional specified from different view points.

2005.1: New element

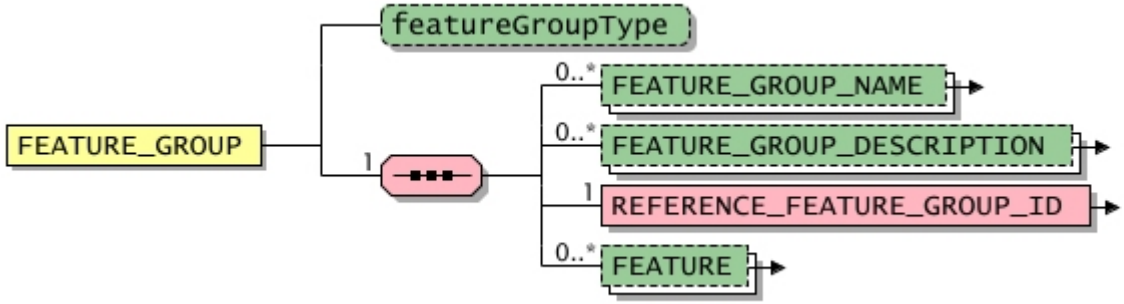

General					
Used in	Default value	Data type	Field length	Lang. specific	l.chg. in ver.
PRODUCT_FEATURES	-	-	-	-	2005.1

Attributes								
Designation	Attribute name	Mandatory/ optional	Explanation	Default value	Data type	Field length	Lang. specific	l.chg. in ver.
Type of feature group	featureGroupType	Optional	Description of the type of aspect like technical, economic, logistic etc. 2005.1: New attribute 2005.2: Extension of the documentation.	-	**dtSTRING**	-	-	2005.2

Elements									
Designation	Element name	Mandatory/ Optional	Single/ Multiple	Explanation	Default value	Data type	Field length	Lang. specific	l.chg. in ver.
group name	**FEATURE_GROUP_ NAME**	Optional	Multiple	Name of the group	-	**dtMLSTRING**	-	-	2005.1

Copyright © 2022 BME e.V. - BMEcat® Version 2005.2
Copyright © 2010-2021 BME e.V. - BMEcat® Version 2005.1
Copyright © 2005-2009 BME e.V. - BMEcat® Version 2005
Copyright © 1998–2004 Fraunhofer IAO, Stuttgart; Universität Essen BLI - BMEcat® Version 1.2

Elements									
Designation	Element name	Mandatory/ Optional	Single/ Multiple	Explanation	Default value	Data type	Field length	Lang. specific	I.chg. in ver.
	- lang **- locale**			*					
group description	**FEATURE_GROUP_ DESCRIPTION** **- lang** **- locale**	Optional	Multiple	Description of the group *	-	**dtMLSTRING**	-	-	2005.1
Group reference	**REFERENCE_ FEATURE_GROUP_ID** **- type**	Mandatory	Single	Reference to the unique identifier of an existing group of the respective classification system; this element may only be used if the **REFERENCE_FEATURE_GROUP_ NAME** element is not used.	-	**dtSTRING**	60	-	-
Product feature	**FEATURE**	Optional	Multiple	Information about a single product feature *	-	-	-	-	2005.2

Copyright © 2022 BME e.V. - BMEcat® Version 2005.2
Copyright © 2010-2021 BME e.V. - BMEcat® Version 2005.1
Copyright © 2005-2009 BME e.V. - BMEcat® Version 2005
Copyright © 1998–2004 Fraunhofer IAO, Stuttgart; Universität Essen BLI - BMEcat® Version 1.2

FEATURE_GROUP_NAME

(group name)

Name of the group

2005.1: New element

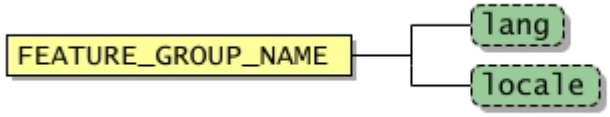

General					
Used in	Default value	Data type	Field length	Lang. specific	l.chg. in ver.
FEATURE_GROUP	-	**dtMLSTRING**	-	-	2005.1

Attributes								
Designation	Attribute name	Mandatory/ optional	Explanation	Default value	Data type	Field length	Lang. specific	l.chg. in ver.
Use language.	lang	Optional	Code, representing the use langauge.	-	**dtLANG**	-	-	-
Use language variant.	locale	Optional	Code representing the used langauge variant.	-	**dtLOCALE**	-	-	-

Example 1:
The short description in the **DESCRIPTION_SHORT** element is provided both in German and English . Note that the "lang" attribute in the second **PRODUCT_DETAILS** element is not necessary, if the default language of the catalog (**CATALOG**) has been set to German.

```
<PRODUCT_DETAILS>
    <DESCRIPTION_SHORT lang="deu">Schraubendreher</DESCRIPTION_SHORT>
    <DESCRIPTION_SHORT lang="eng">Screw driver</DESCRIPTION_SHORT>
</PRODUCT_DETAILS>
...
<PRODUCT_DETAILS>
    <DESCRIPTION_SHORT>Bohrer</DESCRIPTION_SHORT>
    <DESCRIPTION_SHORT lang="eng">Drill</DESCRIPTION_SHORT>
</PRODUCT_DETAILS>
```

Copyright © 2022 BME e.V. - BMEcat® Version 2005.2
Copyright © 2010-2021 BME e.V. - BMEcat® Version 2005.1
Copyright © 2005-2009 BME e.V. - BMEcat® Version 2005
Copyright © 1998–2004 Fraunhofer IAO, Stuttgart; Universität Essen BLI - BMEcat® Version 1.2

Example 2:
The short description in the **DESCRIPTION_SHORT** element is provided both in German and English . Note that the "lang" attribute in the second **PRODUCT_DETAILS** element is not necessary, if the default language of the catalog (**CATALOG**) has been set to German.

```
<PRODUCT>
...     <PRODUCT_FEATURES>
...         <FEATURE>
            <FTEMPLATE>
                <FT_ID>EXAMPLE-ID-123</FT_ID>
                <FT_NAME locale="en">Name</FT_NAME>
                <FT_NAME locale="de">Name</FT_NAME>
                <FT_NAME locale="fr">Nom</FT_NAME>
                <FT_NAME locale="zh-Hans">##</FT_NAME>
                <FT_NAME locale="zh-Latn">míngch#ng</FT_NAME>
            </FTEMPLATE>
            <FVALUE locale="en">Abricot</FVALUE>
            <FVALUE locale="de-AT">Marille</FVALUE>
            <FVALUE locale="de-DE">Aprikose</FVALUE>
            <FVALUE locale="fr">Abricot</FVALUE>
            <FVALUE locale="zh-Hans">#</FVALUE>
            <FVALUE locale="zh-Latn">xìngzi</FVALUE>
        </FEATURE>
    </PRODUCT_FEATURES>
... </PRODUCT>
```

Copyright © 2022 BME e.V. - BMEcat® Version 2005.2
Copyright © 2010-2021 BME e.V. - BMEcat® Version 2005.1
Copyright © 2005-2009 BME e.V. - BMEcat® Version 2005
Copyright © 1998–2004 Fraunhofer IAO, Stuttgart; Universität Essen BLI - BMEcat® Version 1.2

FEATURE_GROUP_DESCRIPTION

(group description)

Description of the group

2005.1: New element

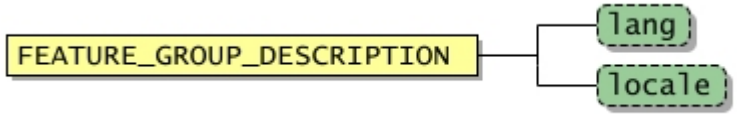

General					
Used in	Default value	Data type	Field length	Lang. specific	l.chg. in ver.
FEATURE_GROUP	-	**dtMLSTRING**	-	-	2005.1

Attributes								
Designation	Attribute name	Mandatory/ optional	Explanation	Default value	Data type	Field length	Lang. specific	l.chg. in ver.
Language Use language.	lang	Optional	Language of descriptionCode, representing the use langauge. 2005.1: New attribut	-	**dtLANG**	-	-	2005.1
Extended language code Use language variant.	locale	Optional	Extended language code of descriptionCode representing the used langauge variant. 2005.1: New attribut	-	**dtLOCALE**	-	-	2005.1

Example 1:
The short description in the **DESCRIPTION_SHORT** element is provided both in German and English . Note that the "lang" attribute in the second **PRODUCT_DETAILS** element is not necessary, if the default language of the catalog (**CATALOG**) has been set to German.

```
<PRODUCT_DETAILS>
    <DESCRIPTION_SHORT lang="deu">Schraubendreher</DESCRIPTION_SHORT>
    <DESCRIPTION_SHORT lang="eng">Screw driver</DESCRIPTION_SHORT>
</PRODUCT_DETAILS>
...
```

Copyright © 2022 BME e.V. - BMEcat® Version 2005.2
Copyright © 2010-2021 BME e.V. - BMEcat® Version 2005.1
Copyright © 2005-2009 BME e.V. - BMEcat® Version 2005
Copyright © 1998–2004 Fraunhofer IAO, Stuttgart; Universität Essen BLI - BMEcat® Version 1.2

```
<PRODUCT_DETAILS>
    <DESCRIPTION_SHORT>Bohrer</DESCRIPTION_SHORT>
    <DESCRIPTION_SHORT lang="eng">Drill</DESCRIPTION_SHORT>
</PRODUCT_DETAILS>
```

Example 2:
The short description in the **DESCRIPTION_SHORT** element is provided both in German and English . Note that the "lang" attribute in the second **PRODUCT_DETAILS** element is not necessary, if the default language of the catalog (**CATALOG**) has been set to German.

```
<PRODUCT>
...     <PRODUCT_FEATURES>
...         <FEATURE>
            <FTEMPLATE>
                <FT_ID>EXAMPLE-ID-123</FT_ID>
                <FT_NAME locale="en">Name</FT_NAME>
                <FT_NAME locale="de">Name</FT_NAME>
                <FT_NAME locale="fr">Nom</FT_NAME>
                <FT_NAME locale="zh-Hans">##</FT_NAME>
                <FT_NAME locale="zh-Latn">míngch#ng</FT_NAME>
            </FTEMPLATE>
            <FVALUE locale="en">Abricot</FVALUE>
            <FVALUE locale="de-AT">Marille</FVALUE>
            <FVALUE locale="de-DE">Aprikose</FVALUE>
            <FVALUE locale="fr">Abricot</FVALUE>
            <FVALUE locale="zh-Hans">#</FVALUE>
            <FVALUE locale="zh-Latn">xìngzi</FVALUE>
        </FEATURE>
    </PRODUCT_FEATURES>
... </PRODUCT>
```

Copyright © 2022 BME e.V. - BMEcat® Version 2005.2
Copyright © 2010-2021 BME e.V. - BMEcat® Version 2005.1
Copyright © 2005-2009 BME e.V. - BMEcat® Version 2005
Copyright © 1998–2004 Fraunhofer IAO, Stuttgart; Universität Essen BLI - BMEcat® Version 1.2

PRODUCT_ORDER_DETAILS

(Order details)

This element information on ordering and packing.

2005fd: This new element replaces with a modified semantics the **ARTICLE_ORDER_DETAILS** element; it has been extended by the following sub-elements: **SUPPLIER_PIDREF**, **SUPPLIER_IDREF**, **QUANTITY_MAX**, **PACKING_UNITS**

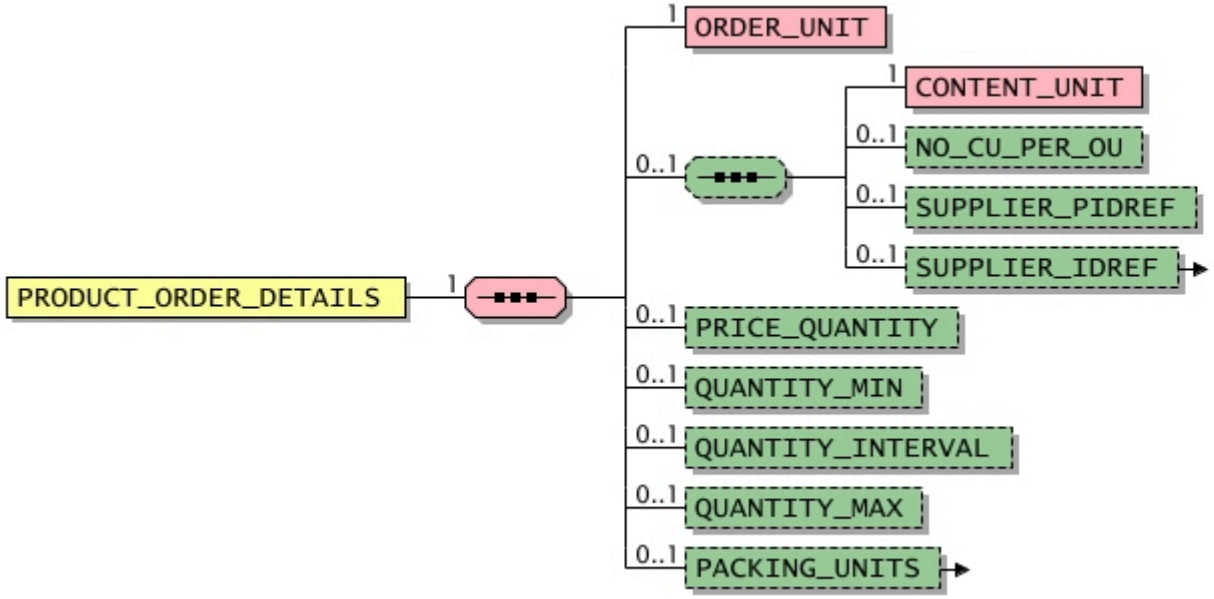

General					
Used in	Default value	Data type	Field length	Lang. specific	I.chg. in ver.
PRODUCT in context T_NEW_CATALOG, **PRODUCT** in context T_UPDATE_PRODUCTS	-	-	-	-	2005fd

Copyright © 2022 BME e.V. - BMEcat® Version 2005.2
Copyright © 2010-2021 BME e.V. - BMEcat® Version 2005.1
Copyright © 2005-2009 BME e.V. - BMEcat® Version 2005
Copyright © 1998–2004 Fraunhofer IAO, Stuttgart; Universität Essen BLI - BMEcat® Version 1.2

Elements

Designation	Element name	Mandatory/ Optional	Single/ Multiple	Explanation	Default value	Data type	Field length	Lang. specific	l.chg. in ver.
Order unit	**ORDER_UNIT**	Mandatory	Single	Unit in which the product can be ordered; it is only possible to order multiples of the product unit. The price also always refers to this unit (or to part of or multiples of it). Example: Crate of mineral water with 6 bottles Order unit: "crate", contents unit/unit of the article: "bottle" Packing quantity: "6"	-	**dtPUNIT**	-	-	-
Content of the unit	**CONTENT_UNIT**	Mandatory	Single	Unit of the product related to the order unit	-	**dtPUNIT**	-	-	-
Packing quantity	**NO_CU_PER_OU**	Optional	Single	Number of content units per order unit of the product 2005: A default value was added.	1	**dtNUMBER**	-	-	2005
Reference to a product number	**SUPPLIER_PIDREF**	Optional	Single	This element provides a reference to a product number of the supplier. It contains the unique identifier (**SUPPLIER_PID**) that is defined in the document. 2005fd: This new element replaces the **ART_ID_TO** element.	-	**dtSTRING**	32	-	2005fd
Reference to supplier	**SUPPLIER_IDREF - type**	Optional	Single	Reference to the supplier. It contains the unique identifier (**PARTY_ID**) of the respective party that is defined in the document (element **PARTY**). 	-	**dtSTRING**	250	-	2005fd
Price quantity	**PRICE_QUANTITY**	Optional	Single	If nothing is specified in this field the default value 1 is assumed, in other words the price refers to exactly one order unit. If specified, a multiple or a fraction of the order unit (element **ORDER_UNIT**) which indicates the quantity to which all the specified prices refer. Example: 10 (i.e. the specified price refers to 10 crates) 2005: A default value was added.	1	**dtNUMBER**	-	-	2005
Minimum quantity	**QUANTITY_MIN**	Optional	Single	 2005fd: The data type has beend changed from **dtINTEGER** to **dtFLOAT**. 2005: A default value was added.	1	**dtFLOAT**	-	-	2005
Quantity interval	**QUANTITY_INTERVAL**	Optional	Single	Number indicating the quantity steps in which the articles can be ordered. The first step always corresponds to the minimum order quantity specified. The unit of the quantity interval is the same as the order unit. Example: 1 (i.e. 5, 6, 7, ... crates) Example: 2 (i.e. 4, 6, 8, ... crates)	1	**dtFLOAT**	-	-	2005

Copyright © 2022 BME e.V. - BMEcat® Version 2005.2
Copyright © 2010-2021 BME e.V. - BMEcat® Version 2005.1
Copyright © 2005-2009 BME e.V. - BMEcat® Version 2005
Copyright © 1998–2004 Fraunhofer IAO, Stuttgart; Universität Essen BLI - BMEcat® Version 1.2

Elements

Designation	Element name	Mandatory/ Optional	Single/ Multiple	Explanation	Default value	Data type	Field length	Lang. specific	l.chg. in ver.
				 2005fd: The data type has been changed from **dtINTEGER** to **dtFLOAT**. 2005: A default value was added.					
Maximum quantity	**QUANTITY_MAX**	Optional	Single	 2005fd: New element	-	**dtFLOAT**	-	-	2005fd
Packing units	**PACKING_UNITS**	Optional	Single	Information on the dependency of the packing unit from the order unit. Example: Printing paper á 500 sheets has the order unit pack; ordering 5 packs results in a new packing unit, karton; ordering 50 packs or 10 cartons results in another packing unit, covering box; ordering 500 packs or 100 cartons results in the biggest packing unit here, palette. 	-	-	-	-	2005fd

Example

Order units and minimum order quantities are specified for the “Charlie casual shirt”. The shirt can only be ordered in packs ("PK" after data type **dtPUNIT**) of six ("C62" after data type **dtPUNIT**), and at least one pack must be ordered.

```
<PRODUCT_ORDER_DETAILS>
    <ORDER_UNIT>PK</ORDER_UNIT>
    <CONTENT_UNIT>C62</CONTENT_UNIT>
    <NO_CU_PER_OU>6</NO_CU_PER_OU>
    <PRICE_QUANTITY>1</PRICE_QUANTITY>
    <QUANTITY_MIN>1</QUANTITY_MIN>
    <QUANTITY_INTERVAL>1</QUANTITY_INTERVAL>
    <QUANTITY_MAX>1000</QUANTITY_MAX>
</PRODUCT_ORDER_DETAILS>
```

Copyright © 2022 BME e.V. - BMEcat® Version 2005.2
Copyright © 2010-2021 BME e.V. - BMEcat® Version 2005.1
Copyright © 2005-2009 BME e.V. - BMEcat® Version 2005
Copyright © 1998–2004 Fraunhofer IAO, Stuttgart; Universität Essen BLI - BMEcat® Version 1.2

PACKING_UNITS

(Packing units)

This element contains information on the dependency of the packing unit from the order unit. Example: Printing paper á 500 sheets has the order unit pack; ordering 5 packs results in a new packing unit, karton; ordering 50 packs or 10 cartons results in another packing unit, covering box; ordering 500 packs or 100 cartons results in the biggest packing unit here, palette.

2005fd: New element

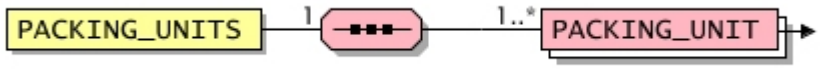

General					
Used in	Default value	Data type	Field length	Lang. specific	I.chg. in ver.
ARTICLE_ORDER_DETAILS, **PRODUCT_ORDER_DETAILS**	-	-	-	-	2005fd

Elements									
Designation	Element name	Mandatory/ Optional	Single/ Multiple	Explanation	Default value	Data type	Field length	Lang. specific	I.chg. in ver.
Packing unit	**PACKING_UNIT**	Mandatory	Multiple	Information on the packing unit and its validity for one order unit respectively an order unit interval	-	-	-	-	2005

Copyright © 2022 BME e.V. - BMEcat® Version 2005.2
Copyright © 2010-2021 BME e.V. - BMEcat® Version 2005.1
Copyright © 2005-2009 BME e.V. - BMEcat® Version 2005
Copyright © 1998–2004 Fraunhofer IAO, Stuttgart; Universität Essen BLI - BMEcat® Version 1.2

PACKING_UNIT

(Packing unit)

Information on the packing unit and its validity for one order unit respectively an order unit interval. By its sub elements **SUPPLIER_PIDREF** and **SUPPLIER_IDREF** it is possible to reference another product, if the bigger packing unit can be ordered directly by this other product ID and its order conditions.

2005fd: New element
2005: The sub element **QUANTITY_INTERVAL** was renamed to **QUANTITY_MAX**.

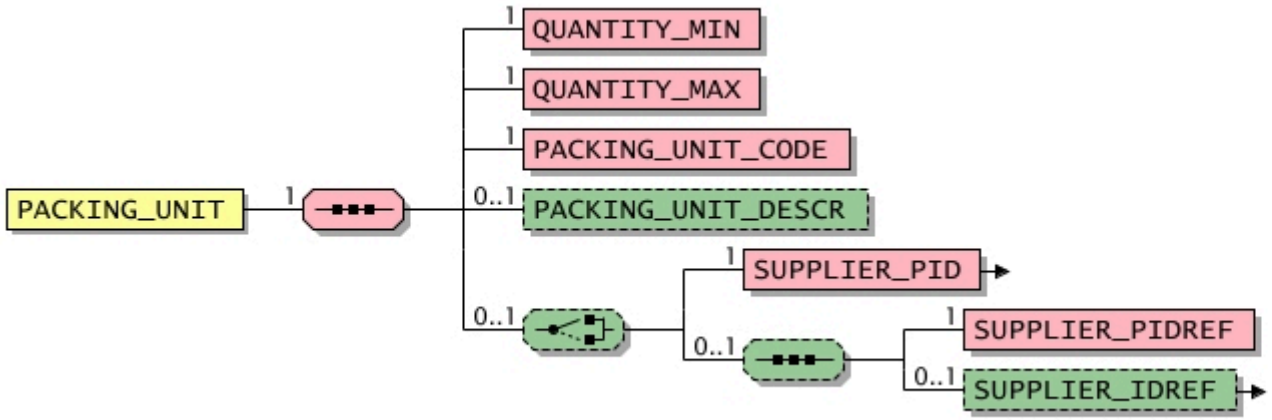

General					
Used in	Default value	Data type	Field length	Lang. specific	l.chg. in ver.
PACKING_UNITS	-	-	-	-	2005

Elements									
Designation	Element name	Mandatory/ Optional	Single/ Multiple	Explanation	Default value	Data type	Field length	Lang. specific	l.chg. in ver.
Minimum quantity	**QUANTITY_MIN**	Mandatory	Single	2005fd: The data type has beend changed from **dtINTEGER** to **dtFLOAT**. 2005: A default value was added.	1	**dtFLOAT**	-	-	2005
Maximum quantity	**QUANTITY_MAX**	Mandatory	Single		-	**dtFLOAT**	-	-	2005fd

Copyright © 2022 BME e.V. - BMEcat® Version 2005.2
Copyright © 2010-2021 BME e.V. - BMEcat® Version 2005.1
Copyright © 2005-2009 BME e.V. - BMEcat® Version 2005
Copyright © 1998–2004 Fraunhofer IAO, Stuttgart; Universität Essen BLI - BMEcat® Version 1.2

Elements

Designation	Element name	Mandatory/ Optional	Single/ Multiple	Explanation	Default value	Data type	Field length	Lang. specific	l.chg. in ver.
				2005fd: New element					
Packing unit code	**PACKING_UNIT_CODE**	Mandatory	Single	Code for the packing unit; has to be selected from the list of predefined values. 2005fd: New element	-	**dtPUNIT**	-	-	2005fd
Packing unit description	**PACKING_UNIT_DESCR**	Optional	Single	Description of the packing unit, i.e. explaination, additional information, hints etc. 2005fd: New element	-	**dtMLSTRING**	250	Yes	2005fd
Supplier's product ID	**SUPPLIER_PID** **- type**	Mandatory	Single	This element contains the product number issued by the supplier. It is determining for ordering the product; it identifies the product in the supplier catalog. In multi-supplier catalogs, however, only the combination of **SUPPLIER_PID** and **SUPPLIER_IDREF** identifies a product.	-	**dtSTRING**	32	-	2005
Reference to a product number	**SUPPLIER_PIDREF**	Mandatory	Single	This element provides a reference to a product number of the supplier. It contains the unique identifier (**SUPPLIER_PID**) that is defined in the document. 2005fd: This new element replaces the **ART_ID_TO** element.	-	**dtSTRING**	32	-	2005fd
Reference to supplier	**SUPPLIER_IDREF** **- type**	Optional	Single	Reference to the supplier. It contains the unique identifier (**PARTY_ID**) of the respective party that is defined in the document (element **PARTY**).	-	**dtSTRING**	250	-	2005fd

Copyright © 2022 BME e.V. - BMEcat® Version 2005.2
Copyright © 2010-2021 BME e.V. - BMEcat® Version 2005.1
Copyright © 2005-2009 BME e.V. - BMEcat® Version 2005
Copyright © 1998–2004 Fraunhofer IAO, Stuttgart; Universität Essen BLI - BMEcat® Version 1.2

PRODUCT_REFERENCE

(Product reference)

A product reference allows it to point from one product to another product. These references have a specific meaning, in other words they define a semantic relationship between the two products.

Each product can reference any number of other products (even products contained in other product catalogs). The various reference types can be used more than once (e.g., multiple spare parts).

The reference types are pre-defined and it is not possible to extend the given number of reference types.

2005fd: This new element replaces with a modified semantics the **ARTICLE_REFERENCE** element; the sub-element **ART_ID_TO** has been renamed to **PROD_ID_TO**; the sub-elements **SUPPLIER_IDREF** and **REFERENCE_DESCR** were added.
2005: This element was extended by the sub-element **MIME_INFO**.

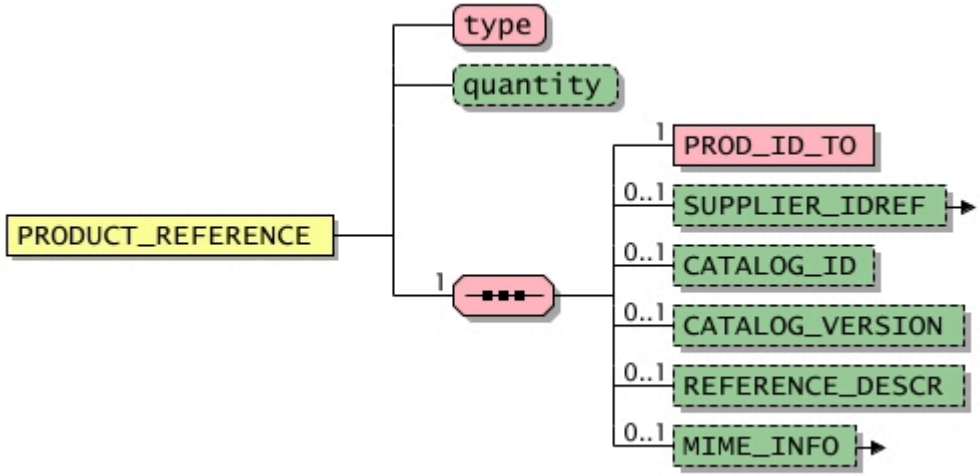

General					
Used in	Default value	Data type	Field length	Lang. specific	l.chg. in ver.
PRODUCT in context T_NEW_CATALOG, **PRODUCT** in context T_UPDATE_PRODUCTS	-	-	-	-	2005

Copyright © 2022 BME e.V. - BMEcat® Version 2005.2
Copyright © 2010-2021 BME e.V. - BMEcat® Version 2005.1
Copyright © 2005-2009 BME e.V. - BMEcat® Version 2005
Copyright © 1998–2004 Fraunhofer IAO, Stuttgart; Universität Essen BLI - BMEcat® Version 1.2

Attributes								
Designation	Attribute name	Mandatory/ optional	Explanation	Default value	Data type	Field length	Lang. specific	l.chg. in ver.
Reference type	type	Mandatory	The reference type describes the relationship between the two products. See also: **Permitted values for attribute "type"**	-	**dtSTRING**	20	-	-
Quantity	quantity	Optional	The attribute "quantity" describes how many products are being referenced. Use of this attribute is only useful for some reference types (e.g., "consists_of"). If there is nothing entered for the attribute "quantity", the quantity is unspecified or is not important in this context. Refer also to **Example 3**.	-	**dtINTEGER**	-	-	1.2_fd

Permitted values for attribute "type"			
Designation	Attribute value	Explanation	l.chg. in ver.
Accessories	accessories	The reference product listed under **PROD_ID_TO** is an accessory product of the source product. An accessory product is considered to extend the functionality of the source product.	1.2_fd
Base product	base_product	The reference product listed under **PROD_ID_TO** is the base product of of the source product, thus the base product is an abstract, packing-independent description of the source product (Example: Source product = six pack of beer; base product = beer without any packing information) 2005fd: New value	2005fd
Component part	consists_of	The reference product listed under **PROD_ID_TO** is a component part of this source product. This type of reference can be used to build up parts lists. Reference is always made from the parent part to the parts it consists of. In order to reference the number of reference parts contained, the attribute "quantity" can be added. Refer also to **Example 3**.	1.2_fd
Alternative packing unit	diff_orderunit	The reference product listed under **PROD_ID_TO** consists of the same basic product as the source product. The source product is available in different packaging, however. Example: Reference from a barrel of beer to a bottle of beer, or from a packet of paper to a pallet (containing many packets).	1.2_fd
Follow-up article	followup	The reference product listed under **PROD_ID_TO** is the follow-up product to this source product . A follow-up product is defined as a product which has the same purpose and functions as the source product and can be considered a more advanced version of it.	-
Mandatory additional product	mandatory	The reference product listed under **PROD_ID_TO** is a mandatory additional product which must always be ordered at the same time as the product article. The source product described cannot be ordered alone. If several products are marked "mandatory" they must all be ordered together with the source product. 2005: This value was erased in version 2005fd by accident and was reinserted in version 2005.	2005
Similar product	similar	The reference product listed under **PROD_ID_TO** is similar to this source product. A similar product is defined as a product which is similar in purpose and functions to the source product and can possibly be used in its place.	-
Selectable mandatory product	select	The reference product listed under **PROD_ID_TO** is a selectable additional product. The described reference product cannot be ordered alone. If several products are connected by "select" at least one of the additional products for the source product listed under **PROD_ID_TO** must be ordered.	-

Copyright © 2022 BME e.V. - BMEcat® Version 2005.2
Copyright © 2010-2021 BME e.V. - BMEcat® Version 2005.1
Copyright © 2005-2009 BME e.V. - BMEcat® Version 2005
Copyright © 1998–2004 Fraunhofer IAO, Stuttgart; Universität Essen BLI - BMEcat® Version 1.2

Permitted values for attribute "type"

Designation	Attribute value	Explanation	l.chg. in ver.
Spare part	sparepart	The reference product listed under **PROD_ID_TO** is a spare part for this source product. A spare part is defined as a part of the product that can be replaced separately in the course of maintenance and repair activities.	-
Other reference type	others	This reference type can be used if none of the other reference types adequately describes the relationship between the reference product and the source product.	-

Elements

Designation	Element name	Mandatory/ Optional	Single/ Multiple	Explanation	Default value	Data type	Field length	Lang. specific	l.chg. in ver.
Reference product	**PROD_ID_TO**	Mandatory	Single	This is the unique number (**SUPPLIER_PID**) of the product to which a reference is made. 2005fd: This new element replaces the **ART_ID_TO** element.	-	**dtSTRING**	80	-	2005fd
Reference to supplier	**SUPPLIER_IDREF - type**	Optional	Single	Reference to the supplier. It contains the unique identifier (**PARTY_ID**) of the respective party that is defined in the document (element **PARTY**). 	-	**dtSTRING**	250	-	2005fd
Catalog ID	**CATALOG_ID**	Optional	Single	Unique catalog identification. This ID is usually assigned by the supplier when the catalog is generated and remains unchanged throughout the entire lifecycle of the catalog.	-	**dtSTRING**	20	-	-
Catalog version	**CATALOG_VERSION**	Optional	Single	Version number of the catalog. May only be reset on the target system in conjunction with a **T_NEW_CATALOG** transaction and not in the case of updates, see also example (**Interaction of various transactions**). Format: "MajorVersion"."MinorVersion" (maximum xxx.yyy) **Example** 001.120 7.3	-	**dtSTRING**	7	-	1.2_fd
Reference description	**REFERENCE_DESCR**	Optional	Single	This element can be used to describe the reference. 2005fd: New element	-	**dtMLSTRING**	250	Yes	2005fd
Additional multimedia information	**MIME_INFO**	Optional	Single	Information about multimedia files	-	-	-	-	-

Copyright © 2022 BME e.V. - BMEcat® Version 2005.2
Copyright © 2010-2021 BME e.V. - BMEcat® Version 2005.1
Copyright © 2005-2009 BME e.V. - BMEcat® Version 2005
Copyright © 1998–2004 Fraunhofer IAO, Stuttgart; Universität Essen BLI - BMEcat® Version 1.2

Example 1
“Dennis”, the follow-up model, and “Roger”, a similar model, are specified for the “Charlie “ casual shirt.

```
<PRODUCT_REFERENCE type="followup">
    <PROD_ID_TO>54-Dennis-B</PROD_ID_TO>
</PRODUCT_REFERENCE>
<PRODUCT_REFERENCE type="similar">
    <PROD_ID_TO>57-Roger-S</PROD_ID_TO>
    <CATALOG_ID>4342S-4543-U</CATALOG_ID>
</PRODUCT_REFERENCE>
```

Example 2
The diagram below shows a more complex example which also serves to demonstrate how products in other product catalogs can be referenced (the use of external references is not recommended at the moment, however). The small boxes represent various products in a catalog (large frame). The numbers inside the boxes show **SUPPLIER_PID**s. The product inside the box with a thicker edge, "VW Golf II" is the product used to reference other products. The lines representing the references are labeled with the respective reference types.

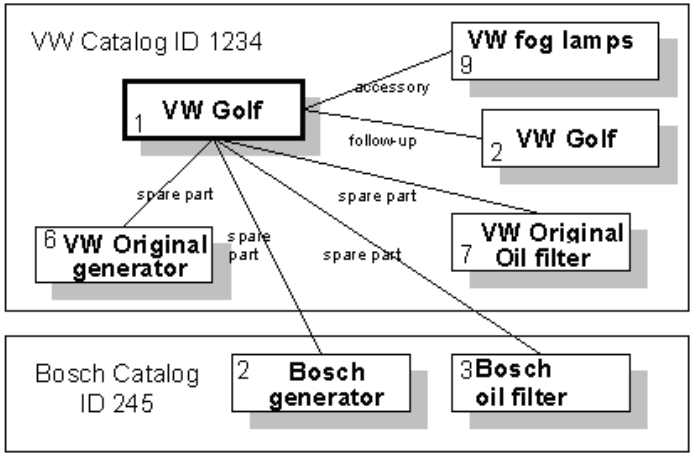

This example requires the following PRODUCT_REFERENCEs to be entered:

For the product with **SUPPLIER_PID**=1:

```
<PRODUCT_REFERENCE type="accessories">
    <PROD_ID_TO>9</PROD_ID_TO>
</PRODUCT_REFERENCE>
<PRODUCT_REFERENCE type="follow-up">
    <PROD_ID_TO>2</PROD_ID_TO>
</PRODUCT_REFERENCE>
<PRODUCT_REFERENCE type="spare part">
    <PROD_ID_TO>7</PROD_ID_TO>
```

Copyright © 2022 BME e.V. - BMEcat® Version 2005.2
Copyright © 2010-2021 BME e.V. - BMEcat® Version 2005.1
Copyright © 2005-2009 BME e.V. - BMEcat® Version 2005
Copyright © 1998–2004 Fraunhofer IAO, Stuttgart; Universität Essen BLI - BMEcat® Version 1.2

```
</PRODUCT_REFERENCE>
<PRODUCT_REFERENCE type="spare part">
    <PROD_ID_TO>6</PROD_ID_TO>
</PRODUCT_REFERENCE>
<PRODUCT_REFERENCE type="spare part">
    <PROD_ID_TO>2</PROD_ID_TO>
    <CATALOG_ID>245</CATALOG_ID>
    <CATALOG_VERSION>010.010</CATALOG_VERSION>
</PRODUCT_REFERENCE>
<PRODUCT_REFERENCE type="spare part">
    <PROD_ID_TO>3</PROD_ID_TO>
    <CATALOG_ID>245</CATALOG_ID>
    <CATALOG_VERSION>010.010</CATALOG_VERSION>
</PRODUCT_REFERENCE>
```

Example 3
It must be specified that a table with the **SUPPLIER_PID** "Table 1" consists of one table top with the **SUPPLIER_PID** "Table top 5" and four table legs with the **SUPPLIER_PID** "Leg 7".

```
<PRODUCT>
    <SUPPLIER_PID>Table 1</SUPPLIER_PID>
     ...
    <PRODUCT_REFERENCE type="consists_of" quantity="1">
        <PROD_ID_TO>Table top 5</PROD_ID_TO>
    </PRODUCT_REFERENCE>
    <PRODUCT_REFERENCE type="consists_of" quantity="4">
        <PROD_ID_TO>Leg 7</PROD_ID_TO>
    </PRODUCT_REFERENCE>
</PRODUCT>
```

Copyright © 2022 BME e.V. - BMEcat® Version 2005.2
Copyright © 2010-2021 BME e.V. - BMEcat® Version 2005.1
Copyright © 2005-2009 BME e.V. - BMEcat® Version 2005
Copyright © 1998–2004 Fraunhofer IAO, Stuttgart; Universität Essen BLI - BMEcat® Version 1.2

PRODUCT_CONTACTS

(Product contacts)

This element contains a list of contact person for the product.

2005fd: New element
2005: The sub-element **CONTACT_IDREF** may occur more than once.

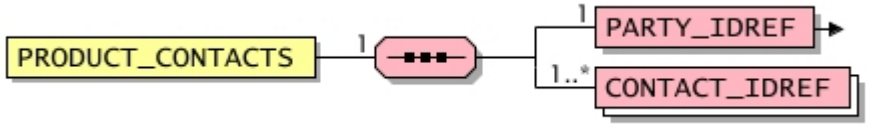

General					
Used in	Default value	Data type	Field length	Lang. specific	l.chg. in ver.
PRODUCT in context T_NEW_CATALOG, **PRODUCT** in context T_UPDATE_PRODUCTS	-	-	-	-	2005

Elements

Designation	Element name	Mandatory/ Optional	Single/ Multiple	Explanation	Default value	Data type	Field length	Lang. specific	l.chg. in ver.
Reference to a business partner	**PARTY_IDREF - type**	Mandatory	Single	Reference to a business partner. It contains the unique identifier (**PARTY_ID**) of the respective party (element **PARTY**).	-	**dtSTRING**	250	-	2005fd
Reference to a contact	**CONTACT_IDREF**	Mandatory	Multiple	This element provides a reference to a contact. It contains the unique identifier **CONTACT_ID** that is defined for the partner, which has been referenced in the **PARTY_IDREF** element. 2005fd: New element 2005: The maximum length has been extended from 50 characters to 60 characters.	-	**dtSTRING**	60	-	2005

Copyright © 2022 BME e.V. - BMEcat® Version 2005.2
Copyright © 2010-2021 BME e.V. - BMEcat® Version 2005.1
Copyright © 2005-2009 BME e.V. - BMEcat® Version 2005
Copyright © 1998–2004 Fraunhofer IAO, Stuttgart; Universität Essen BLI - BMEcat® Version 1.2

PRODUCT_IPP_DETAILS

(IPP details)

This element contains product-specific information on IPP applications.

2005fd: New element

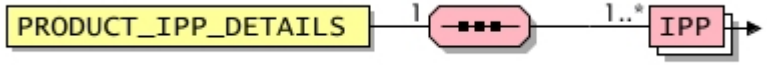

General					
Used in	Default value	Data type	Field length	Lang. specific	l.chg. in ver.
PRODUCT in context T_NEW_CATALOG, **PRODUCT** in context T_UPDATE_PRODUCTS	-	-	-	-	2005fd

Elements									
Designation	Element name	Mandatory/ Optional	Single/ Multiple	Explanation	Default value	Data type	Field length	Lang. specific	l.chg. in ver.
IPP application	**IPP**	Mandatory	Multiple	Is used to overwrite and particularise specifications of an IPP application which have been made in the header in the element **IPP_DEFINITION** with new specifications on product level.	-	-	-	-	2005fd

Copyright © 2022 BME e.V. - BMEcat® Version 2005.2
Copyright © 2010-2021 BME e.V. - BMEcat® Version 2005.1
Copyright © 2005-2009 BME e.V. - BMEcat® Version 2005
Copyright © 1998–2004 Fraunhofer IAO, Stuttgart; Universität Essen BLI - BMEcat® Version 1.2

IPP

(IPP application)

This element is used to overwrite and particularise specifications of an IPP application which have been made in the header in the element **IPP_DEFINITION** with new specifications on product level.

2005fd: New element

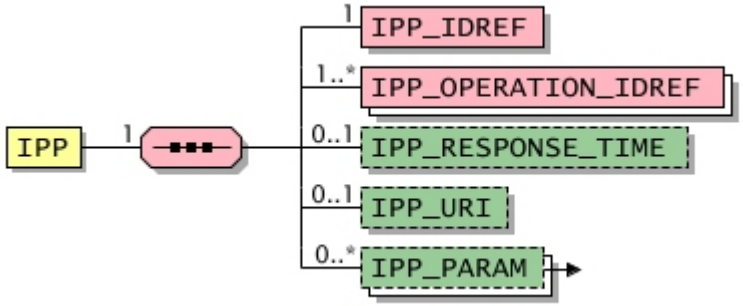

General					
Used in	Default value	Data type	Field length	Lang. specific	l.chg. in ver.
PRODUCT_IPP_DETAILS	-	-	-	-	2005fd

Elements									
Designation	Element name	Mandatory/ Optional	Single/ Multiple	Explanation	Default value	Data type	Field length	Lang. specific	l.chg. in ver.
Referenz to an IPP application	**IPP_IDREF**	Mandatory	Single	Reference to the unique identifier of an IPP application. The reference has to link to an **IPP_ID** in the element **IPP_DEFINITION**. 2005fd: New element	-	**dtSTRING**	60	-	2005fd
Referenz to an IPP operation	**IPP_OPERATION_IDREF**	Mandatory	Multiple	Specification of one or more Ipp operations. The reference has to link to an **IPP_OPERATION_ID** in the element **IPP_DEFINITION**. 2005fd: New element	-	**dtSTRING**	60	-	2005fd

Copyright © 2022 BME e.V. - BMEcat® Version 2005.2
Copyright © 2010-2021 BME e.V. - BMEcat® Version 2005.1
Copyright © 2005-2009 BME e.V. - BMEcat® Version 2005
Copyright © 1998–2004 Fraunhofer IAO, Stuttgart; Universität Essen BLI - BMEcat® Version 1.2

Elements									
Designation	Element name	Mandatory/ Optional	Single/ Multiple	Explanation	Default value	Data type	Field length	Lang. specific	l.chg. in ver.
Response time	**IPP_RESPONSE_TIME**	Optional	Single	Guaranteed response time of the IPP application. If no response is received after this time beginning with the IPP initiation, the transaction has failed. 2005fd: New element	-	**dtDURATION**	-	-	2005fd
IPP operation URL	**IPP_URI**	Optional	Single	Calling address of the IPP operation 2005fd: New element	-	**dtMLSTRING**	255	Yes	2005fd
IPP transfered parameter	**IPP_PARAM**	Optional	Multiple	Paramter that has to be transferred in the IPP call 	-	-	-	-	2005fd

Example

In this example, a previously defined IPP is assigned to a product, hence the **PRODUCT_IPP_DETAILS** element appears in the context of **PRODUCT**. We use the same IPP that was already defined in the example "external catalog" **IPP_DEFINITION , Beispiel 1**. The assignment is realized with the idenitifiers of the IPP application and the IPP operation (here: process). In addition, we assign the value 'true' to the user-defined parameter JOBSHOP. This value has to be transfered in the call of the external catalog, depending on the transaction protocol; in this case, the value has to be inserted in the respectiveOCI message.

```
<PRODUCT_IPP_DETAILS>
    <IPP>
        <IPP_IDREF>1</IPP_IDREF>
        <IPP_OPERATION_IDREF>1</IPP_OPERATION_IDREF>
        <IPP_PARAM>
            <IPP_PARAM_NAMEREF>JOBSHOP</IPP_PARAM_NAMEREF>
            <IPP_PARAM_VALUE>true</IPP_PARAM_VALUE>
        </IPP_PARAM>
    </IPP>
</PRODUCT_IPP_DETAILS>
```

Copyright © 2022 BME e.V. - BMEcat® Version 2005.2
Copyright © 2010-2021 BME e.V. - BMEcat® Version 2005.1
Copyright © 2005-2009 BME e.V. - BMEcat® Version 2005
Copyright © 1998–2004 Fraunhofer IAO, Stuttgart; Universität Essen BLI - BMEcat® Version 1.2

IPP_PARAM

(IPP transfered parameter)

This element contains a paramter which has to be transferred in the IPP call.

2005fd: New element

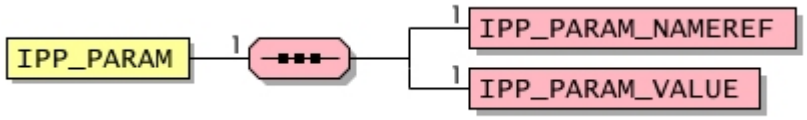

General					
Used in	Default value	Data type	Field length	Lang. specific	l.chg. in ver.
IPP	-	-	-	-	2005fd

Elements

Designation	Element name	Mandatory/ Optional	Single/ Multiple	Explanation	Default value	Data type	Field length	Lang. specific	l.chg. in ver.
Reference to IPP parameter	**IPP_PARAM_NAMEREF**	Mandatory	Single	This element references to the specification of a parameter in a definition of an IPP application (**IPP_DEFINITION**). 2005fd: New element	-	**dtSTRING**	100	-	2005fd
IPP parameter value	**IPP_PARAM_VALUE**	Mandatory	Single	This element contains the value of an IPP parameter. 2005fd: New element	-	**dtSTRING**	3000	-	2005fd

Copyright © 2022 BME e.V. - BMEcat® Version 2005.2
Copyright © 2010-2021 BME e.V. - BMEcat® Version 2005.1
Copyright © 2005-2009 BME e.V. - BMEcat® Version 2005
Copyright © 1998–2004 Fraunhofer IAO, Stuttgart; Universität Essen BLI - BMEcat® Version 1.2

PRODUCT_LOGISTIC_DETAILS

(Logistics information)

This element contains logistic information on the product.

2005fd: New element
2005: This element was extended by the new **STATISTICS_FACTOR** element. The sub-elements **TRANSPORT** and **MEANS_OF_TRANSPORT** were set to multiple.

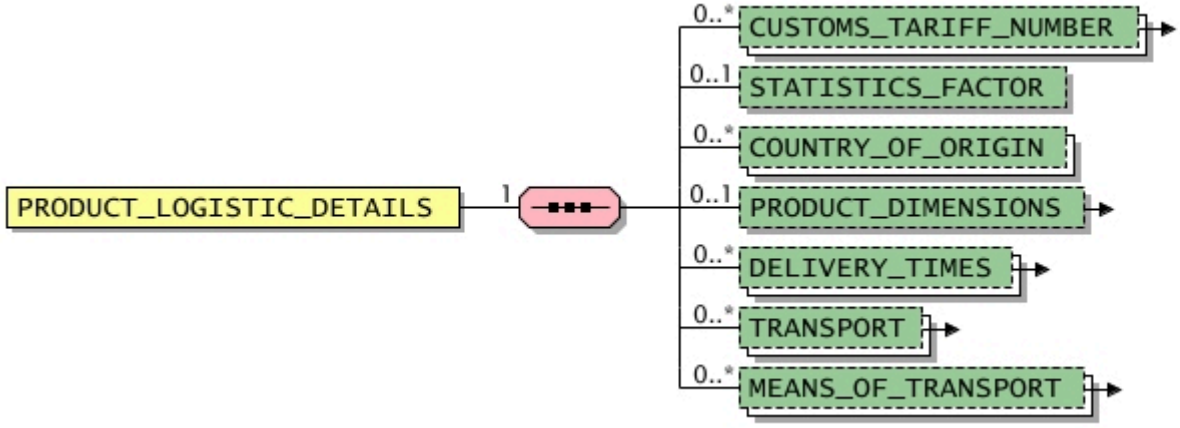

General					
Used in	Default value	Data type	Field length	Lang. specific	l.chg. in ver.
PRODUCT in context T_NEW_CATALOG, **PRODUCT** in context T_UPDATE_PRODUCTS	-	-	-	-	2005

Elements									
Designation	Element name	Mandatory/ Optional	Single/ Multiple	Explanation	Default value	Data type	Field length	Lang. specific	l.chg. in ver.
Customs tariff number	**CUSTOMS_TARIFF_ NUMBER**	Optional	Multiple	Information on the customs tariff number	-	-	-	-	2005fd
Statistics factor	**STATISTICS_FACTOR**	Optional	Single	Factor that transform the order unit into the unit of measurement that is necessary for the foreign trade statistics. In this exemplarily example 3 m long pipes could be be ordered (order unit = each). The foreign trade statistics requires meter; therefore, the	-	**dtNUMBER**	-	-	2005

Copyright © 2022 BME e.V. - BMEcat® Version 2005.2
Copyright © 2010-2021 BME e.V. - BMEcat® Version 2005.1
Copyright © 2005-2009 BME e.V. - BMEcat® Version 2005
Copyright © 1998–2004 Fraunhofer IAO, Stuttgart; Universität Essen BLI - BMEcat® Version 1.2

Elements

Designation	Element name	Mandatory/ Optional	Single/ Multiple	Explanation	Default value	Data type	Field length	Lang. specific	I.chg. in ver.
				factor is 3. O base of this factor and the order unit also calculation factors for different sales units can be derived. 2005: New element					
Country of origin	**COUNTRY_OF_ORIGIN**	Optional	Multiple	Contains the country of origin of the product. By using a subdivision code it is possible to reference a region. 2005fd: New element	-	**dtCOUNTRIES**	-	-	2005fd
Product dimensions	**PRODUCT_ DIMENSIONS**	Optional	Single	Information on the product dimension from the view of business logistics 	-	-	-	-	2005fd
Delivery time	**DELIVERY_TIMES**	Optional	Multiple	Information on the delivery time 	-	-	-	-	2005fd
Transport	**TRANSPORT**	Optional	Multiple	Information about the terms of transport 	-	-	-	-	2005fd
Means of transport	**MEANS_OF_ TRANSPORT - type**	Optional	Multiple	Means of transport with which the goods to be delivered are transported 	-	-	-	-	2005fd

Copyright © 2022 BME e.V. - BMEcat® Version 2005.2
Copyright © 2010-2021 BME e.V. - BMEcat® Version 2005.1
Copyright © 2005-2009 BME e.V. - BMEcat® Version 2005
Copyright © 1998–2004 Fraunhofer IAO, Stuttgart; Universität Essen BLI - BMEcat® Version 1.2

CUSTOMS_TARIFF_NUMBER

(Customs tariff number)

This element contains information on the customs tariff number.

2005fd: New element

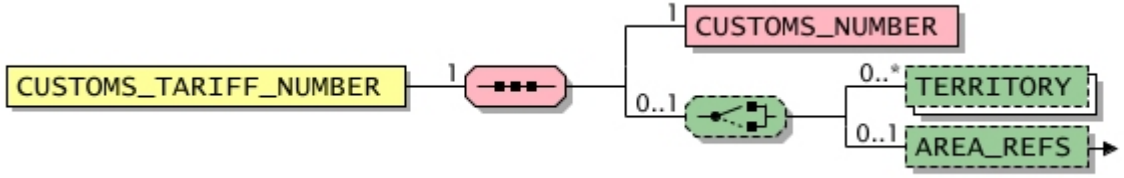

General					
Used in	Default value	Data type	Field length	Lang. specific	l.chg. in ver.
ARTICLE_LOGISTIC_DETAILS, **PRODUCT_LOGISTIC_DETAILS**	-	-	-	-	2005fd

Elements

Designation	Element name	Mandatory/ Optional	Single/ Multiple	Explanation	Default value	Data type	Field length	Lang. specific	l.chg. in ver.
Customs number	**CUSTOMS_NUMBER**	Mandatory	Single	This element contains the customs number. 2005fd: New element	-	**dtSTRING**	60	-	2005fd
Territory	**TERRITORY**	Optional	Multiple	Territory (i.e. country, state, region) coded according to ISO 3166	-	**dtCOUNTRIES**	-	-	1.2_fd
Area references	**AREA_REFS**	Optional	Single	List of references to areas	-	-	-	-	2005fd

Copyright © 2022 BME e.V. - BMEcat® Version 2005.2
Copyright © 2010-2021 BME e.V. - BMEcat® Version 2005.1
Copyright © 2005-2009 BME e.V. - BMEcat® Version 2005
Copyright © 1998–2004 Fraunhofer IAO, Stuttgart; Universität Essen BLI - BMEcat® Version 1.2

PRODUCT_DIMENSIONS

(Product dimensions)

This element contains information on the product dimension from the view of business logistics.

2005fd: New element

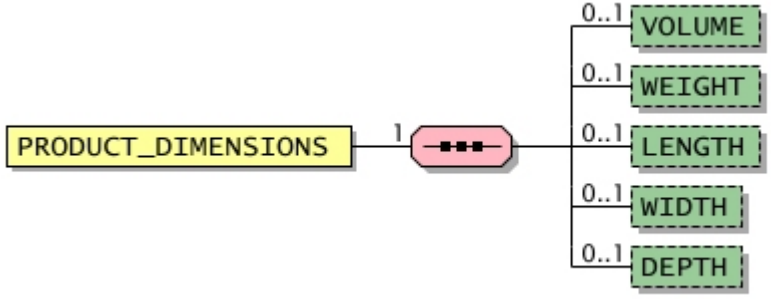

General					
Used in	Default value	Data type	Field length	Lang. specific	I.chg. in ver.
ARTICLE_LOGISTIC_DETAILS, **PRODUCT_LOGISTIC_DETAILS**	-	-	-	-	2005fd

Elements									
Designation	Element name	Mandatory/ Optional	Single/ Multiple	Explanation	Default value	Data type	Field length	Lang. specific	I.chg. in ver.
Volume	**VOLUME**	Optional	Single	Volume in cubic meters (**m³**) 2005fd: New element	-	**dtNUMBER**	-	-	2005fd
Weight	**WEIGHT**	Optional	Single	Weight in kilogram (**kg**) 2005fd: New element	-	**dtNUMBER**	-	-	2005fd
Length	**LENGTH**	Optional	Single	Length in meters (**m**) 2005fd: New element	-	**dtNUMBER**	-	-	2005fd

Copyright © 2022 BME e.V. - BMEcat® Version 2005.2
Copyright © 2010-2021 BME e.V. - BMEcat® Version 2005.1
Copyright © 2005-2009 BME e.V. - BMEcat® Version 2005
Copyright © 1998–2004 Fraunhofer IAO, Stuttgart; Universität Essen BLI - BMEcat® Version 1.2

Elements									
Designation	Element name	Mandatory/ Optional	Single/ Multiple	Explanation	Default value	Data type	Field length	Lang. specific	l.chg. in ver.
Width	**WIDTH**	Optional	Single	Width in meters (**m**) 2005fd: New element	-	**dtNUMBER**	-	-	2005fd
Depth	**DEPTH**	Optional	Single	Depth in meters (**m**) 2005fd: New element	-	**dtNUMBER**	-	-	2005fd

Copyright © 2022 BME e.V. - BMEcat® Version 2005.2
Copyright © 2010-2021 BME e.V. - BMEcat® Version 2005.1
Copyright © 2005-2009 BME e.V. - BMEcat® Version 2005
Copyright © 1998–2004 Fraunhofer IAO, Stuttgart; Universität Essen BLI - BMEcat® Version 1.2

MEANS_OF_TRANSPORT

(Means of transport)

Means of transport with which the goods to be delivered are transported

2005fd: New element

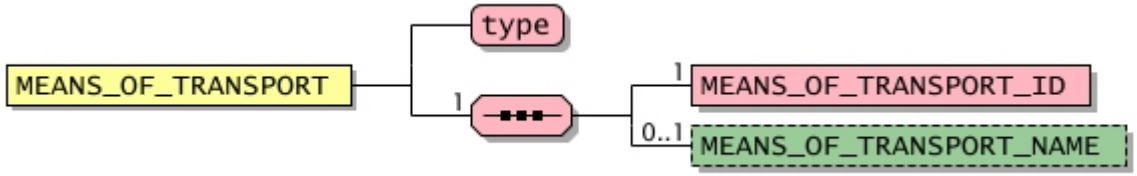

General					
Used in	Default value	Data type	Field length	Lang. specific	l.chg. in ver.
ARTICLE_LOGISTIC_DETAILS, **PRODUCT_LOGISTIC_DETAILS**	-	-	-	-	2005fd

Attributes								
Designation	Attribute name	Mandatory/ optional	Explanation	Default value	Data type	Field length	Lang. specific	l.chg. in ver.
Type of transport means	type	Mandatory	Specifies the type of transport means. The pre-defined values follow UN/ECE Recommendation 19 - TRADE/CEFACT/2001/19 (see **http://www.unece.org/cefact/recommendations/rec19/rec19_01cf19e.pdf**). See also: **Predefined values for attribute "type"**	-	**dtSTRING**	50	-	2005fd

Predefined values for attribute "type"			
Designation	Attribute value	Explanation	l.chg. in ver.
Air transport	air	The goods will be transported by air.	2005fd
Maritime transport	maritime	The goods will be transported by sea.	2005fd
Multi-modal transport	multimodal	The goods are transported "multi-modally". This could be used to describe a container, for example, which is directly connected to the goods.	2005fd
Rail transport	rail	The goods will be transported by rail.	2005fd
Road transport	road	The goods will be transported by road.	2005fd

Copyright © 2022 BME e.V. - BMEcat® Version 2005.2
Copyright © 2010-2021 BME e.V. - BMEcat® Version 2005.1
Copyright © 2005-2009 BME e.V. - BMEcat® Version 2005
Copyright © 1998–2004 Fraunhofer IAO, Stuttgart; Universität Essen BLI - BMEcat® Version 1.2

Predefined values for attribute "type"			
Designation	Attribute value	Explanation	l.chg. in ver.
User defined type	User defined value, format: \w{1,50}	Identification of the user defined type . "\w{1,50}" means that the type identification has to be at least 1 chraracter long up to a maximum of 50 characters.	2005fd

Elements									
Designation	Element name	Mandatory/ Optional	Single/ Multiple	Explanation	Default value	Data type	Field length	Lang. specific	l.chg. in ver.
Means of transport ID	**MEANS_OF_ TRANSPORT_ID**	Mandatory	Single	ID for the means of transport 2005fd: New element	-	**dtSTRING**	50	-	2005fd
Name of the means of transport	**MEANS_OF_ TRANSPORT_NAME**	Optional	Single	Name of the means of transport 2005fd: New element	-	**dtMLSTRING**	50	Yes	2005fd

Copyright © 2022 BME e.V. - BMEcat® Version 2005.2
Copyright © 2010-2021 BME e.V. - BMEcat® Version 2005.1
Copyright © 2005-2009 BME e.V. - BMEcat® Version 2005
Copyright © 1998–2004 Fraunhofer IAO, Stuttgart; Universität Essen BLI - BMEcat® Version 1.2

PRODUCT_CONFIG_DETAILS

(Product configuration information)

This element contains configuration information about the product.

2005fd: New element

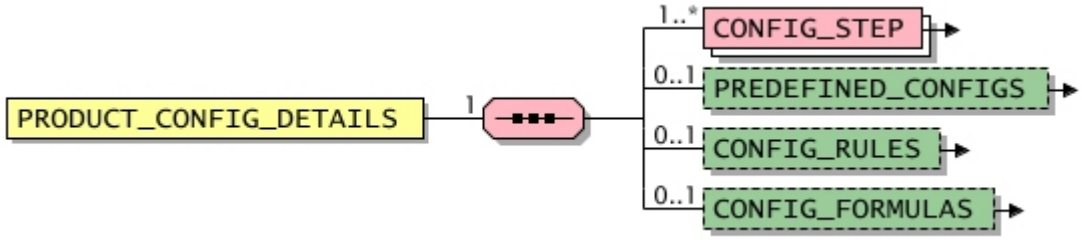

General					
Used in	Default value	Data type	Field length	Lang. specific	I.chg. in ver.
PRODUCT in context T_NEW_CATALOG, **PRODUCT** in context T_UPDATE_PRODUCTS	-	-	-	-	2005fd

Elements

Designation	Element name	Mandatory/ Optional	Single/ Multiple	Explanation	Default value	Data type	Field length	Lang. specific	I.chg. in ver.
Configuration step	**CONFIG_STEP**	Mandatory	Multiple	Information on a configuration step	-	-	-	-	2005fd
Predefined configurations	**PREDEFINED_CONFIGS**	Optional	Single	List of predefined configurations	-	-	-	-	2005fd
Configuration rules	**CONFIG_RULES**	Optional	Single	List of terms for calculating configuration values or for restricting valid configurations	-	-	-	-	-
Configuration formulas	**CONFIG_FORMULAS**	Optional	Single	List of configuration formulas	-	-	-	-	2005fd

Copyright © 2022 BME e.V. - BMEcat® Version 2005.2
Copyright © 2010-2021 BME e.V. - BMEcat® Version 2005.1
Copyright © 2005-2009 BME e.V. - BMEcat® Version 2005
Copyright © 1998–2004 Fraunhofer IAO, Stuttgart; Universität Essen BLI - BMEcat® Version 1.2

Example 1
A well documented example can be found in chapter **Example: laptop configuration**.

Example 2
In this example the price of the specified product depends on the the delivery time. The example is divided up into three parts: the definition of the formula within the global formula repository is described here **Example 2 to element FORMULA**; the specification of the required configuration is shown below; the usage of the defined price formulas is described in **Example 2 for element PRODUCT_PRICE_DETAILS**.

The price is structured as follows:

- normal (up to 3 days): without allowance
- short (24 hours): 50 euro allowance
- long (up to 2 weeks): 20 euro discount

Shown here is a feature based configuration step. The user can select one of the three alternative enumeration values. The feature is defined via the element **FTEMPLATE**. The feature must not be described any further because only the specification of the three enumeration values (**FT_VALUE**) are needed.

The user con skip this configuration step as specified in the element **STEP_INTERACTION_TYPE** with the value '**take_default**'.In this case the default value "normal delivery" (with the element **DEFAULT_FLAG** has value "true") is selected automatically.

```
<PRODUCT_CONFIG_DETAILS>
    <CONFIG_STEP>
        <STEP_ID>S1</STEP_ID>
        <STEP_HEADER>Delivery time</STEP_HEADER>
        <STEP_INTERACTION_TYPE>take_default</STEP_INTERACTION_TYPE>
        <CONFIG_CODE>time</CONFIG_CODE>
        <CONFIG_FEATURE>
            <FTEMPLATE>
                <FT_ID>sfssdf</FT_ID>
                <FT_NAME>Duration</FT_NAME>
                <FEATURE_CONTENT>
                    <FT_DATATYPE>string</FT_DATATYPE>
                    <FT_VALUES>
                        <FT_VALUE>
                            <VALUE_TEXT>normal</VALUE_TEXT>
                            <CONFIG_INFO>
                                <CONFIG_CODE>N</CONFIG_CODE>
                            </CONFIG_INFO>
                            <VALUE_ORDER>1</VALUE_ORDER>
                            <DEFAULT_FLAG>true</DEFAULT_FLAG>
                        </FT_VALUE>
                        <FT_VALUE>
                            <VALUE_TEXT>express</VALUE_TEXT>
                            <CONFIG_INFO>
                                <CONFIG_CODE>E</CONFIG_CODE>
                            </CONFIG_INFO>
                            <VALUE_ORDER>2</VALUE_ORDER>
```

Copyright © 2022 BME e.V. - BMEcat® Version 2005.2
Copyright © 2010-2021 BME e.V. - BMEcat® Version 2005.1
Copyright © 2005-2009 BME e.V. - BMEcat® Version 2005
Copyright © 1998–2004 Fraunhofer IAO, Stuttgart; Universität Essen BLI - BMEcat® Version 1.2

```
                        </FT_VALUE>
                        <FT_VALUE>
                            <VALUE_TEXT>slow</VALUE_TEXT>
                            <CONFIG_INFO>
                                <CONFIG_CODE>S</CONFIG_CODE>
                            </CONFIG_INFO>
                            <VALUE_ORDER>3</VALUE_ORDER>
                        </FT_VALUE>
                    </FT_VALUES>
                </FEATURE_CONTENT>
            </FTEMPLATE>
        </CONFIG_FEATURE>
        <MIN_OCCURANCE>1</MIN_OCCURANCE>
        <MAX_OCCURANCE>1</MAX_OCCURANCE>
    </CONFIG_STEP>
</PRODUCT_CONFIG_DETAILS>
```

Example 3

In this example the configuration information for a cable with individual length are shown. The order unit should be piece to order any amount of cables with an individual length within one order line. The cable length can be entered from 10 cm up to 1000 m in 1cm steps.

The price fixing is realized via a price formula (see also **Example 3 for element FORMULA**).

```
<PRODUCT_CONFIG_DETAILS>
    <CONFIG_STEP>
        <STEP_ID>CL</STEP_ID>
        <STEP_HEADER>Enter cable length</STEP_HEADER>
        <CONFIG_CODE>sz:</CONFIG_CODE>
        <CONFIG_FEATURE>
            <FTEMPLATE>
                <FT_ID>FF765756</FT_ID>
                <FT_NAME>dlaksjd</FT_NAME>
                <FEATURE_CONTENT>
                    <FT_DATATYPE>float</FT_DATATYPE>
                    <FT_FACETS>
                        <FT_FACET type="minInclusive">.10</FT_FACET>
                        <FT_FACET type="maxInclusive">1000</FT_FACET>
                        <FT_FACET type="fractionDigits">2</FT_FACET>
                    </FT_FACETS>
                    <FT_UNIT>m</FT_UNIT>
                </FEATURE_CONTENT>
            </FTEMPLATE>
        </CONFIG_FEATURE>
        <MIN_OCCURANCE>1</MIN_OCCURANCE>
        <MAX_OCCURANCE>1</MAX_OCCURANCE>
    </CONFIG_STEP>
</PRODUCT_CONFIG_DETAILS>
```

Copyright © 2022 BME e.V. - BMEcat® Version 2005.2
Copyright © 2010-2021 BME e.V. - BMEcat® Version 2005.1
Copyright © 2005-2009 BME e.V. - BMEcat® Version 2005
Copyright © 1998–2004 Fraunhofer IAO, Stuttgart; Universität Essen BLI - BMEcat® Version 1.2

Example 4
This example shows how a pen is specified which a individual text can be printed on. The text is limited to 20 characters.

The length of the text is specified via the element **FT_FACETS**.

The price fixing is realized via a price formula (see also **Example 4 for element FORMULA**).

```
<PRODUCT_CONFIG_DETAILS>
    <CONFIG_STEP>
        <STEP_ID>PTEXT</STEP_ID>
        <STEP_HEADER>Print</STEP_HEADER>
        <STEP_DESCR_SHORT>The print is applied on the lower part of the pen. Please enter the text in this step.</STEP_DESCR_SHORT>
        <CONFIG_FEATURE>
            <FTEMPLATE>
                <FT_ID>123</FT_ID>
                <FT_NAME>Print</FT_NAME>
                <FEATURE_CONTENT>
                    <FT_DATATYPE>string</FT_DATATYPE>
                    <FT_FACETS>
                        <FT_FACET type="minLength">1</FT_FACET>
                        <FT_FACET type="maxLength">20</FT_FACET>
                    </FT_FACETS>
                </FEATURE_CONTENT>
            </FTEMPLATE>
        </CONFIG_FEATURE>
        <MIN_OCCURANCE>1</MIN_OCCURANCE>
        <MAX_OCCURANCE>1</MAX_OCCURANCE>
    </CONFIG_STEP>
</PRODUCT_CONFIG_DETAILS>
```

Copyright © 2022 BME e.V. - BMEcat® Version 2005.2
Copyright © 2010-2021 BME e.V. - BMEcat® Version 2005.1
Copyright © 2005-2009 BME e.V. - BMEcat® Version 2005
Copyright © 1998–2004 Fraunhofer IAO, Stuttgart; Universität Essen BLI - BMEcat® Version 1.2

CONFIG_STEP

(Configuration step)

This element contains information on a configuration step.

2005fd: New element

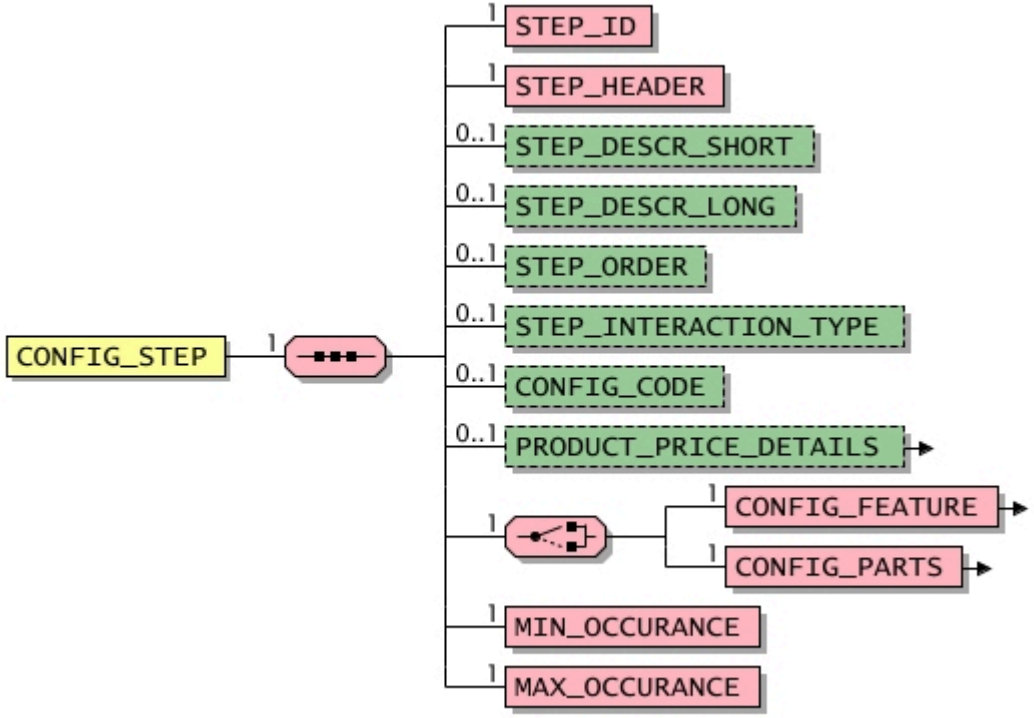

General					
Used in	Default value	Data type	Field length	Lang. specific	I.chg. in ver.
PRODUCT_CONFIG_DETAILS	-	-	-	-	2005fd

Copyright © 2022 BME e.V. - BMEcat® Version 2005.2
Copyright © 2010-2021 BME e.V. - BMEcat® Version 2005.1
Copyright © 2005-2009 BME e.V. - BMEcat® Version 2005
Copyright © 1998–2004 Fraunhofer IAO, Stuttgart; Universität Essen BLI - BMEcat® Version 1.2

Elements

Designation	Element name	Mandatory/ Optional	Single/ Multiple	Explanation	Default value	Data type	Field length	Lang. specific	l.chg. in ver.
Identification of the configuration step	**STEP_ID**	Mandatory	Single	This element provides the unique identifier of the configuration step. 2005fd: New element	-	**dtSTRING**	60	-	2005fd
Header of the configuration step	**STEP_HEADER**	Mandatory	Single	This element defines a visible header, thus title of the configuration step 2005fd: New element	-	**dtMLSTRING**	250	Yes	2005fd
configuration step short description	**STEP_DESCR_SHORT**	Optional	Single	This element is used to describe the configuration step. 2005fd: New element	-	**dtMLSTRING**	3000	Yes	2005fd
Configuration step long description	**STEP_DESCR_LONG**	Optional	Single	This element can be used to describe the configuration step in more detail. 2005fd: New element	-	**dtMLSTRING**	64000	Yes	2005fd
Order of configuration step	**STEP_ORDER**	Optional	Single	Order in which the configuration step have be taken in the target system A configuration process starts with the step which has the lowest order number.. 2005fd: New element	-	**dtINTEGER**	-	-	2005fd
Configuration type	**STEP_INTERACTION_ TYPE**	Optional	Single	specifies wether a configuration step has to be run through or the default values can be inserted 2005fd: New element See also: **Permitted values for element STEP_INTERACTION_TYPE**	force_ userinput	**dtSTRING**	20	-	2005fd
Order number extension	**CONFIG_CODE**	Optional	Single	In order to generate the order number of configurated products, this element can be used for coding the result of each configuration step; the unique code is added to the base order number. By adding these codes for each configuration step a unique order number is created. If the configuration requires more than one configuration step, it should be guaranted that the extensions can be separated. A solution is to standardize the length of each added code; for instance, adding 3 characters, e.g., "003"="black". Another solution is to separate the codes by a hyphen (e.g., "-red"). 2005fd: New element	-	**dtSTRING**	50	-	2005fd

Copyright © 2022 BME e.V. - BMEcat® Version 2005.2
Copyright © 2010-2021 BME e.V. - BMEcat® Version 2005.1
Copyright © 2005-2009 BME e.V. - BMEcat® Version 2005
Copyright © 1998–2004 Fraunhofer IAO, Stuttgart; Universität Essen BLI - BMEcat® Version 1.2

Elements									
Designation	Element name	Mandatory/ Optional	Single/ Multiple	Explanation	Default value	Data type	Field length	Lang. specific	l.chg. in ver.
Price details	**PRODUCT_PRICE_ DETAILS**	Optional	Single	Price information for the product	-	-	-	-	2005fd
Configuration feature	**CONFIG_FEATURE**	Mandatory	Single	Defines a feature to which product configuration assignes a value, i.e. by selection from a list of allowed value, or user input.	-	-	-	-	2005
Configuration component	**CONFIG_PARTS**	Mandatory	Single	Defines a component, which can or must be selected in an actual product configuration.	-	-	-	-	2005fd
Minimum occurence	**MIN_OCCURANCE**	Mandatory	Single	This element contains the minimum number of components respectively feature values which can be selected. 2005fd: New element	-	**dtCOUNT**	-	-	2005fd
Maximum occurence	**MAX_OCCURANCE**	Mandatory	Single	This element contains the maximum number of components respectively feature values which can be selected. 2005fd: New element	-	**dtCOUNT**	-	-	2005fd

Permitted values for element STEP_INTERACTION_TYPE			
Designation	Element value	Explanation	l.chg. in ver.
User input	**force_userinput**	This value indicates that the user has to run through the configuration step. See also **PRODUCT_TYPE =must_be_configured**.	2005fd
Default values	take_default	This value indicates that a configuration step could be skipped and that then the default values are used. See also **PRODUCT_TYPE =configurable**.	2005fd

Copyright © 2022 BME e.V. - BMEcat® Version 2005.2
Copyright © 2010-2021 BME e.V. - BMEcat® Version 2005.1
Copyright © 2005-2009 BME e.V. - BMEcat® Version 2005
Copyright © 1998–2004 Fraunhofer IAO, Stuttgart; Universität Essen BLI - BMEcat® Version 1.2

CONFIG_FEATURE

(Configuration feature)

This element defines a feature to which product configuration assignes a value, i.e. by selection from a list of allowed value, or user input.

2005fd: New element
2005: The sub-element **CLASSIFICATION_FEATURE_REF** was renamed to **FREF**. The sub-element **CLASSIFICATION_SYSTEM_FEATURE_TEMPLATE** was replaced with the fully identical element **FTEMPLATE**. The sequence of **FREF** and **FTEMPLATE** was switched.

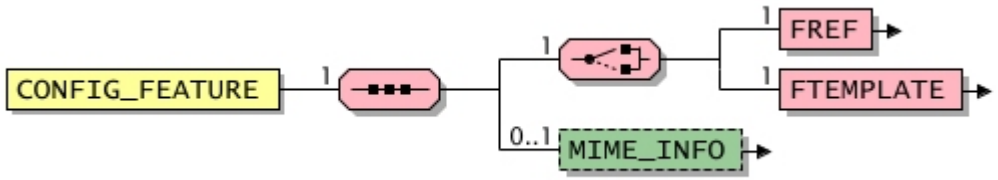

General					
Used in	Default value	Data type	Field length	Lang. specific	l.chg. in ver.
CONFIG_STEP	-	-	-	-	2005

Elements									
Designation	Element name	Mandatory/ Optional	Single/ Multiple	Explanation	Default value	Data type	Field length	Lang. specific	l.chg. in ver.
Reference to a feature	FREF	Mandatory	Single	Reference to a feature which is defined in a classification system	-	-	-	-	2005
Feature definition	FTEMPLATE	Mandatory	Single	Definition of the feature	-	-	-	-	2005
Additional multimedia information	MIME_INFO	Optional	Single	Information about multimedia files	-	-	-	-	-

Copyright © 2022 BME e.V. - BMEcat® Version 2005.2
Copyright © 2010-2021 BME e.V. - BMEcat® Version 2005.1
Copyright © 2005-2009 BME e.V. - BMEcat® Version 2005
Copyright © 1998–2004 Fraunhofer IAO, Stuttgart; Universität Essen BLI - BMEcat® Version 1.2

CONFIG_PARTS

(Configuration component)

This element defines a component, which can or must be selected in an actual product configuration.

2005fd: New element

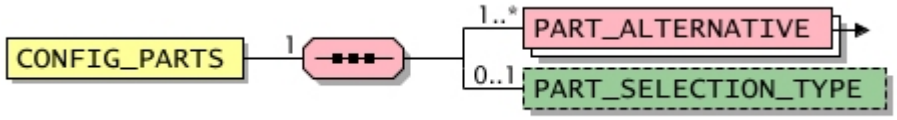

General					
Used in	Default value	Data type	Field length	Lang. specific	l.chg. in ver.
CONFIG_STEP	-	-	-	-	2005fd

Elements									
Designation	Element name	Mandatory/ Optional	Single/ Multiple	Explanation	Default value	Data type	Field length	Lang. specific	l.chg. in ver.
Variant componetnts	**PART_ALTERNATIVE**	Mandatory	Multiple	Contains information about the componente, e.g. reference to the product and implications to the order code and configuration price	-	-	-	-	2005fd
Selection type	**PART_SELECTION_ TYPE**	Optional	Single	If multiple components can be selected the selection type specifies wether the selected components have to be distinct or if one component can be selected multiple times. 2005fd: New element See also: **Permitted values for element PART_SELECTION_TYPE** **Example** If a laptop has two cartriges the value 'distinct' means that both cartriges have two be filled different. The value 'non-distinct' or the absence of the element **PART_ SELECTION_TYPE** allows that both cartriges can be filled the same way.	non-distinct	**dtSTRING**	20	-	2005fd

Copyright © 2022 BME e.V. - BMEcat® Version 2005.2
Copyright © 2010-2021 BME e.V. - BMEcat® Version 2005.1
Copyright © 2005-2009 BME e.V. - BMEcat® Version 2005
Copyright © 1998–2004 Fraunhofer IAO, Stuttgart; Universität Essen BLI - BMEcat® Version 1.2

Permitted values for element PART_SELECTION_TYPE			
Designation	Element value	Explanation	l.chg. in ver.
distinct	distinct	This value specifies that in multiple selections all components have to be distinct from each other.	2005fd
non-distinct	**non-distinct**	This value specifies that in multiple selections each components can only be selected once.	2005fd

Copyright © 2022 BME e.V. - BMEcat® Version 2005.2
Copyright © 2010-2021 BME e.V. - BMEcat® Version 2005.1
Copyright © 2005-2009 BME e.V. - BMEcat® Version 2005
Copyright © 1998–2004 Fraunhofer IAO, Stuttgart; Universität Essen BLI - BMEcat® Version 1.2

PART_ALTERNATIVE

(Variant componetnts)

This element contains information about the componente, e.g. reference to the product and implications to the order code and configuration price.

2005fd: New element

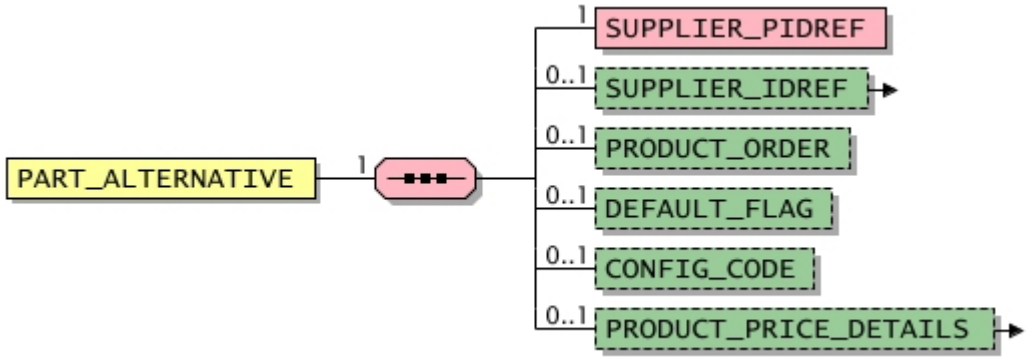

General					
Used in	Default value	Data type	Field length	Lang. specific	l.chg. in ver.
CONFIG_PARTS	-	-	-	-	2005fd

Elements									
Designation	Element name	Mandatory/ Optional	Single/ Multiple	Explanation	Default value	Data type	Field length	Lang. specific	l.chg. in ver.
Reference to a product number	**SUPPLIER_PIDREF**	Mandatory	Single	This element provides a reference to a product number of the supplier. It contains the unique identifier (**SUPPLIER_PID**) that is defined in the document. 2005fd: This new element replaces the **ART_ID_TO** element.	-	**dtSTRING**	32	-	2005fd
Reference to supplier	**SUPPLIER_IDREF - type**	Optional	Single	Reference to the supplier. It contains the unique identifier (**PARTY_ID**) of the respective party that is defined in the document (element **PARTY**).	-	**dtSTRING**	250	-	2005fd
Product order	**PRODUCT_ORDER**	Optional	Single	Order in which the product has to be presented in the target system	-	**dtINTEGER**	-	-	2005fd

Copyright © 2022 BME e.V. - BMEcat® Version 2005.2
Copyright © 2010-2021 BME e.V. - BMEcat® Version 2005.1
Copyright © 2005-2009 BME e.V. - BMEcat® Version 2005
Copyright © 1998–2004 Fraunhofer IAO, Stuttgart; Universität Essen BLI - BMEcat® Version 1.2

Elements

Designation	Element name	Mandatory/ Optional	Single/ Multiple	Explanation	Default value	Data type	Field length	Lang. specific	l.chg. in ver.
				In list presentation of articles, the articles appear in ascending order (first article corresponds to lowest number). When all products of a catalog group are to be presented, sorting should comply with **PRODUCT_TO_CATALOGGROUP_MAP_ORDER**. 2005fd: This new element replaces the former **ARTICLE_ORDER** element.					
Default flag	**DEFAULT_FLAG**	Optional	Single	Sets the default value of a list of values 2005fd: New element	-	**dtBOOLEAN**	-	-	2005fd
Order number extension	**CONFIG_CODE**	Optional	Single	In order to generate the order number of configurated products, this element can be used for coding the result of each configuration step; the unique code is added to the base order number. By adding these codes for each configuration step a unique order number is created. If the configuration requires more than one configuration step, it should be guaranted that the extensions can be separated. A solution is to standardize the length of each added code; for instance, adding 3 characters, e.g., "003"="black". Another solution is to separate the codes by a hyphen (e.g., "-red"). 2005fd: New element	-	**dtSTRING**	50	-	2005fd
Price details	**PRODUCT_PRICE_ DETAILS**	Optional	Single	Price information for the product 	-	-	-	-	2005fd

Copyright © 2022 BME e.V. - BMEcat® Version 2005.2
Copyright © 2010-2021 BME e.V. - BMEcat® Version 2005.1
Copyright © 2005-2009 BME e.V. - BMEcat® Version 2005
Copyright © 1998–2004 Fraunhofer IAO, Stuttgart; Universität Essen BLI - BMEcat® Version 1.2

PREDEFINED_CONFIGS

(Predefined configurations)

This element contains a list of predefined configurations and allows to specify wether this list covers all valid configurations or only parts.

2005fd: New element

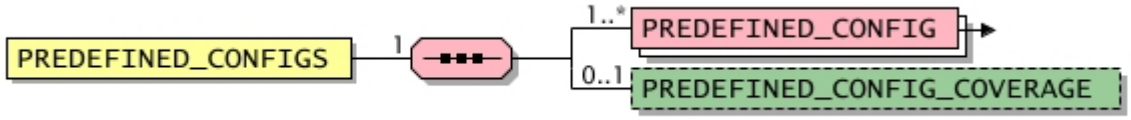

General					
Used in	Default value	Data type	Field length	Lang. specific	l.chg. in ver.
PRODUCT_CONFIG_DETAILS	-	-	-	-	2005fd

Elements									
Designation	Element name	Mandatory/ Optional	Single/ Multiple	Explanation	Default value	Data type	Field length	Lang. specific	l.chg. in ver.
Predefined configuration	**PREDEFINED_CONFIG**	Mandatory	Multiple	Details for a predefined configuration	-	-	-	-	2005fd
Configuration coverage	**PREDEFINED_CONFIG_COVERAGE**	Optional	Single	With this element it can be specified wether the list of predefined configurations covers all valid configurations or only some of all valid configurations. If all valid configurations are covered there is no need to specify constraints (**TERM**) in the element **CONFIG_RULES**. 2005fd: New element See also: **Permitted values for element PREDEFINED_CONFIG_COVERAGE**	partial	**dtSTRING**	20	-	2005fd

Permitted values for element PREDEFINED_CONFIG_COVERAGE			
Designation	Element value	Explanation	l.chg. in ver.
Full coverage	full	The specified predefined configurations cover all valid configurations.	2005fd
Partial coverage	**partial**	The specified predefined configurations cover only some of the valid configurations.	2005fd

Copyright © 2022 BME e.V. - BMEcat® Version 2005.2
Copyright © 2010-2021 BME e.V. - BMEcat® Version 2005.1
Copyright © 2005-2009 BME e.V. - BMEcat® Version 2005
Copyright © 1998–2004 Fraunhofer IAO, Stuttgart; Universität Essen BLI - BMEcat® Version 1.2

Example 1
A well documented example can be found in chapter **Example: laptop configuration**.

Copyright © 2022 BME e.V. - BMEcat® Version 2005.2
Copyright © 2010-2021 BME e.V. - BMEcat® Version 2005.1
Copyright © 2005-2009 BME e.V. - BMEcat® Version 2005
Copyright © 1998–2004 Fraunhofer IAO, Stuttgart; Universität Essen BLI - BMEcat® Version 1.2

PREDEFINED_CONFIG

(Predefined configuration)

This element allows the specification of a predefined configuration. These represent a product which has been specified with a full pass through all configuration steps with choosing or entering the different values. The configuration or oredr code which has been assembled througout the pass identifies the predefined configuration (**PREDEFINED_CONFIG_CODE**). By this means it is possible to present different standard configurations to the user, to describe them and to assign special prices and product numbers.

2005fd: New element

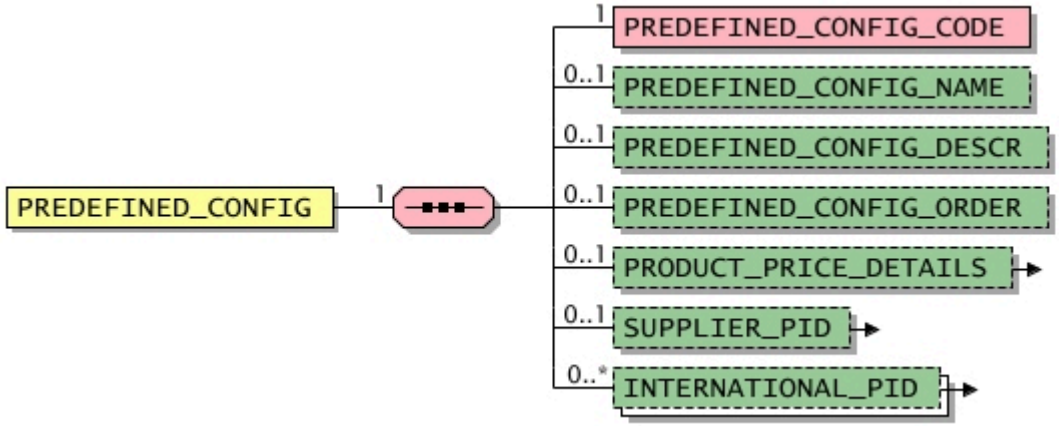

General

Used in	Default value	Data type	Field length	Lang. specific	l.chg. in ver.
PREDEFINED_CONFIGS	-	-	-	-	2005fd

Elements

Designation	Element name	Mandatory/ Optional	Single/ Multiple	Explanation	Default value	Data type	Field length	Lang. specific	l.chg. in ver.
Configuration code	**PREDEFINED_CONFIG_ CODE**	Mandatory	Single	The configuration code (or order code) contains the product number (**SUPPLIER_ PID**) and the configuration codes (**CONFIG_CODE**) of all configuration steps and their values selected or entered in the predefined configuration process. The configuration code represents a fully configured product and is therefore identical with the configuration string which is built up during a identical manual configuration. It is the uique identifier for the element **PREDEFINED_CONFIG**.	-	**dtSTRING**	6000	-	2005fd

Copyright © 2022 BME e.V. - BMEcat® Version 2005.2
Copyright © 2010-2021 BME e.V. - BMEcat® Version 2005.1
Copyright © 2005-2009 BME e.V. - BMEcat® Version 2005
Copyright © 1998–2004 Fraunhofer IAO, Stuttgart; Universität Essen BLI - BMEcat® Version 1.2

Elements

Designation	Element name	Mandatory/ Optional	Single/ Multiple	Explanation	Default value	Data type	Field length	Lang. specific	l.chg. in ver.
				2005fd: New element					
Name of the configuration	**PREDEFINED_CONFIG_ NAME**	Optional	Single	This element is used to specify the name of the predefined product (e.g. standard laptop or laptop high end model). 2005fd: New element	-	**dtMLSTRING**	100	Yes	2005fd
Description of the configuration	**PREDEFINED_CONFIG_ DESCR**	Optional	Single	This element is used to decribe the predefined product in detail (e.g. equipment or application range of the product). 2005fd: New element	-	**dtMLSTRING**	250	Yes	2005fd
Configuration order	**PREDEFINED_CONFIG_ ORDER**	Optional	Single	Order in which the predefined configurations are represented in the target system. If the predefined configurations are listed they are listed in ascending order (the first predefined configuration corresponds to the **PREDEFINED_CONFIG_ORDER** with the lowest number). 2005fd: New element	-	**dtINTEGER**	-	-	2005fd
Price details	**PRODUCT_PRICE_ DETAILS**	Optional	Single	Price information for the product	-	-	-	-	2005fd
Supplier's product ID	**SUPPLIER_PID - type**	Optional	Single	This element contains the product number issued by the supplier. It is determining for ordering the product; it identifies the product in the supplier catalog. In multi-supplier catalogs, however, only the combination of **SUPPLIER_PID** and **SUPPLIER_IDREF** identifies a product.	-	**dtSTRING**	32	-	2005
International product number	**INTERNATIONAL_PID - type**	Optional	Multiple	Indicates an international product number (e.g., EAN). The underlying standard respectively organisation is given in the 'type' attribute.	-	**dtSTRING**	100	-	2005fd

Copyright © 2022 BME e.V. - BMEcat® Version 2005.2
Copyright © 2010-2021 BME e.V. - BMEcat® Version 2005.1
Copyright © 2005-2009 BME e.V. - BMEcat® Version 2005
Copyright © 1998–2004 Fraunhofer IAO, Stuttgart; Universität Essen BLI - BMEcat® Version 1.2

Example 1
A well documented example can be found in chapter **Example: laptop configuration**.

Copyright © 2022 BME e.V. - BMEcat® Version 2005.2
Copyright © 2010-2021 BME e.V. - BMEcat® Version 2005.1
Copyright © 2005-2009 BME e.V. - BMEcat® Version 2005
Copyright © 1998–2004 Fraunhofer IAO, Stuttgart; Universität Essen BLI - BMEcat® Version 1.2

CONFIG_RULES

(Configuration rules)

This element contains a list of terms (**TERM**). This terms are serving two functions. First they allow the destinction between valid and not valid configurations. Second they are used to calculate values within configurations. Which of this two function a term serves depends on the content of the attribute "**type**" within the element **TERM**.

The value of the attribute "**type**" is set to "**constraint**" when the terms is uesed for restricting valid configurations. When the term is used to describe a valid configuartion the term expression (**TERM_EXPRESSION**) has to be "true". A non-valid configuration is specified via the term expression (**TERM_EXPRESSION**) "false".

For simplifying the definition and evaluation of these constraints either only valid configurations or only non-valid configurations are permitted within one product. This means that all terms with the attribute "**type**" equals "**constraint**" are containing all the value "true" or are containing all the value "false".

Terms with the type "**function**" are used for calculating values depending on configurations (e.g. the weight of a product depending on the size specified in the configuration).

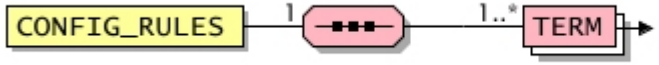

General					
Used in	Default value	Data type	Field length	Lang. specific	l.chg. in ver.
PRODUCT_CONFIG_DETAILS	-	-	-	-	-

Elements

Designation	Element name	Mandatory/ Optional	Single/ Multiple	Explanation	Default value	Data type	Field length	Lang. specific	l.chg. in ver.
Term	**TERM** **- type**	Mandatory	Multiple	Term for calculating values or for restricting configurations	-	-	-	-	2005fd

Example 1

In the following example is specified that for a pen which is available in four colours and different point/line sizes the extra fine point size is only available in black.

```
<CONFIG_RULES>
    <TERM type="constraint">
        <TERM_ID>PEN1</TERM_ID>
        <TERM_CONDITION>(STEP1 = "EF") && !(STEP2 = "black")</TERM_CONDITION>
        <TERM_EXPRESSION>false</TERM_EXPRESSION>
    </TERM>
```

Copyright © 2022 BME e.V. - BMEcat® Version 2005.2
Copyright © 2010-2021 BME e.V. - BMEcat® Version 2005.1
Copyright © 2005-2009 BME e.V. - BMEcat® Version 2005
Copyright © 1998–2004 Fraunhofer IAO, Stuttgart; Universität Essen BLI - BMEcat® Version 1.2

```
</CONFIG_RULES>
```

Example 2
In the following example is specified that a wooden plate is configurated correct if the edges are not exceeding 5m and the overall size is 20m² at most.

```
<CONFIG_RULES>
    <TERM type="constraint">
        <TERM_ID>PLATE1</TERM_ID>
        <TERM_CONDITION>STEP1 < "5"</TERM_CONDITION>
        <TERM_EXPRESSION>true</TERM_EXPRESSION>
    </TERM>
    <TERM type="constraint">
        <TERM_ID>PLATE2</TERM_ID>
        <TERM_CONDITION>STEP2 < "5"</TERM_CONDITION>
        <TERM_EXPRESSION>true</TERM_EXPRESSION>
    </TERM>
    <TERM type="constraint">
        <TERM_ID>PLATE3</TERM_ID>
        <TERM_CONDITION>(STEP1 * STEP2) < "20"</TERM_CONDITION>
        <TERM_EXPRESSION>String</TERM_EXPRESSION>
    </TERM>
</CONFIG_RULES>
```

Copyright © 2022 BME e.V. - BMEcat® Version 2005.2
Copyright © 2010-2021 BME e.V. - BMEcat® Version 2005.1
Copyright © 2005-2009 BME e.V. - BMEcat® Version 2005
Copyright © 1998–2004 Fraunhofer IAO, Stuttgart; Universität Essen BLI - BMEcat® Version 1.2

CONFIG_FORMULAS

(Configuration formulas)

This element contains a list of configuration formulas which refer to formulars of the global formula dictionary.

2005fd: New element

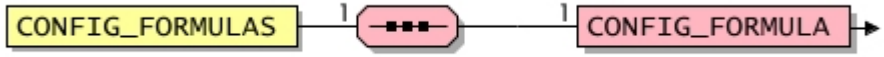

General					
Used in	Default value	Data type	Field length	Lang. specific	l.chg. in ver.
PRODUCT_CONFIG_DETAILS	-	-	-	-	2005fd

Elements									
Designation	Element name	Mandatory/ Optional	Single/ Multiple	Explanation	Default value	Data type	Field length	Lang. specific	l.chg. in ver.
Configuration formula	**CONFIG_FORMULA**	Mandatory	Single	Formula for calculating configuration-dependent values	-	-	-	-	2005fd

Copyright © 2022 BME e.V. - BMEcat® Version 2005.2
Copyright © 2010-2021 BME e.V. - BMEcat® Version 2005.1
Copyright © 2005-2009 BME e.V. - BMEcat® Version 2005
Copyright © 1998–2004 Fraunhofer IAO, Stuttgart; Universität Essen BLI - BMEcat® Version 1.2

CONFIG_FORMULA

(Configuration formula)

This element defines a formular for calculating configuration-dependent values on the basis of parameters.

Anno: This element is equally structured like the **PRICE_FORMULA** element, and therefore uses the same concept.

2005fd: New element

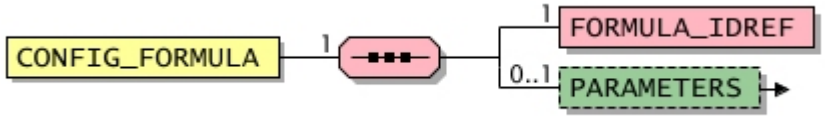

General					
Used in	Default value	Data type	Field length	Lang. specific	l.chg. in ver.
CONFIG_FORMULAS	-	-	-	-	2005fd

Elements									
Designation	Element name	Mandatory/ Optional	Single/ Multiple	Explanation	Default value	Data type	Field length	Lang. specific	l.chg. in ver.
Reference to a formula	**FORMULA_IDREF**	Mandatory	Single	Reference to the unique identifier of a formula. The reference must point to a formula defined in the document (**FORMULA** element identified by **FORMULA_ID**). 2005fd: New element	-	**dtSTRING**	60	-	2005fd
Paramters	**PARAMETERS**	Optional	Single	List of paramters which are used in a price formula	-	-	-	-	2005fd

Copyright © 2022 BME e.V. - BMEcat® Version 2005.2
Copyright © 2010-2021 BME e.V. - BMEcat® Version 2005.1
Copyright © 2005-2009 BME e.V. - BMEcat® Version 2005
Copyright © 1998–2004 Fraunhofer IAO, Stuttgart; Universität Essen BLI - BMEcat® Version 1.2

PRODUCT_TO_CATALOGGROUP_MAP in context T_NEW_CATALOG

(Mapping to catalog group)

Once the catalog structure (**CATALOG_GROUP_SYSTEM**) has been built up, products can be attached to this tree. Since products often cannot clearly be assigned (mapped) to a single group, it is possible to map a product to several different groups. In this case, however, a **PRODUCT_TO_CATALOGGROUP_MAP** in context T_UPDATE_PRODUCTS element must be entered for each mapping. The order of the **PRODUCT_TO_CATALOGGROUP_MAP** in context T_UPDATE_PRODUCTS elements is not relevant.

2005fd: This new element replace the **ARTICLE_TO_CATALOGGROUP_MAP**in context T_NEW_CATALOG element. Contrary to BMEcat 1.2, products can now be mapped to any catalog group. The mapping is no longer restricted to groups on the lowest level, thus to groups (**CATALOG_STRUCTURE**) with attribute "**type**" having the value "**leaf**".

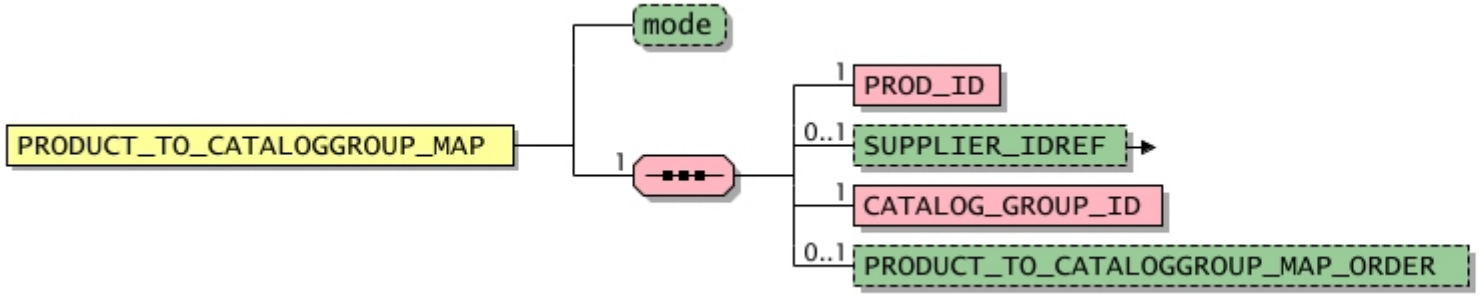

General					
Used in	Default value	Data type	Field length	Lang. specific	l.chg. in ver.
T_NEW_CATALOG	-	-	-	-	2005fd

Attributes								
Designation	Attribute name	Mandatory/ optional	Explanation	Default value	Data type	Field length	Lang. specific	l.chg. in ver.
Mode	mode	Optional	Indicates whether the element is describing a new assignment or the deletion of an existing assignment See also: **Permitted values for attribute "mode"**	new	**dtSTRING**	20	-	-

Permitted values for attribute "mode"			
Designation	Attribute value	Explanation	l.chg. in ver.
New	**new**	Assignment of the product to a catalog group is redefined	-

Copyright © 2022 BME e.V. - BMEcat® Version 2005.2
Copyright © 2010-2021 BME e.V. - BMEcat® Version 2005.1
Copyright © 2005-2009 BME e.V. - BMEcat® Version 2005
Copyright © 1998–2004 Fraunhofer IAO, Stuttgart; Universität Essen BLI - BMEcat® Version 1.2

Elements

Designation	Element name	Mandatory/ Optional	Single/ Multiple	Explanation	Default value	Data type	Field length	Lang. specific	l.chg. in ver.
Product ID	**PROD_ID**	Mandatory	Single	Number of the product which belongs to the group	-	**dtSTRING**	32	-	-
Reference to supplier	**SUPPLIER_IDREF - type**	Optional	Single	Reference to the supplier. It contains the unique identifier (**PARTY_ID**) of the respective party that is defined in the document (element **PARTY**).	-	**dtSTRING**	250	-	2005fd
Catalog group	**CATALOG_GROUP_ID**	Mandatory	Single	Reference to the catalog group. It must point to a **GROUP_ID** (see definition of catalog groups by the **CATALOG_STRUCTURE** element).	-	**dtSTRING**	50	-	-
Product order	**PRODUCT_TO_ CATALOGGROUP_ MAP_ORDER**	Optional	Single	Order in which the products are represented within a catalog group (**CATALOG_ STRUCTURE**) in the target system. When the products are listed they are listed in ascending order (the first product corresponds to the lowest number). If products from several groups are represented, the products should be sorted according to **PRODUCT_ORDER** rather than to **PRODUCT_TO_CATALOGGROUP_ MAP_ORDER**.	-	**dtINTEGER**	-	-	1.2

Copyright © 2022 BME e.V. - BMEcat® Version 2005.2
Copyright © 2010-2021 BME e.V. - BMEcat® Version 2005.1
Copyright © 2005-2009 BME e.V. - BMEcat® Version 2005
Copyright © 1998–2004 Fraunhofer IAO, Stuttgart; Universität Essen BLI - BMEcat® Version 1.2

ARTICLE in context T_NEW_CATALOG

(Product)

Information about a product

This element has been replaced by the **PRODUCT** in context T_NEW_CATALOG element. It still may be used in this BMEcat version, though it will become obsolete in the next version.

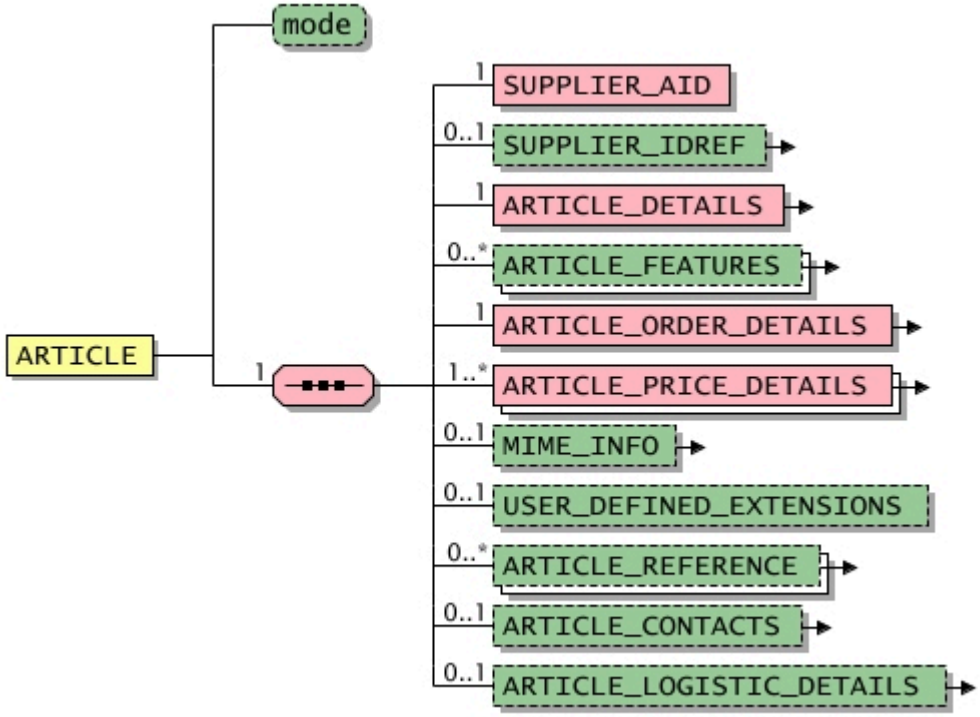

General					
Used in	Default value	Data type	Field length	Lang. specific	I.chg. in ver.
T_NEW_CATALOG	-	-	-	-	-

Copyright © 2022 BME e.V. - BMEcat® Version 2005.2
Copyright © 2010-2021 BME e.V. - BMEcat® Version 2005.1
Copyright © 2005-2009 BME e.V. - BMEcat® Version 2005
Copyright © 1998–2004 Fraunhofer IAO, Stuttgart; Universität Essen BLI - BMEcat® Version 1.2

Attributes								
Designation	Attribute name	Mandatory/ optional	Explanation	Default value	Data type	Field length	Lang. specific	l.chg. in ver.
	mode	Optional	See also: **Permitted values for attribute "mode"**	new	**dtSTRING**	20	-	-

Permitted values for attribute "mode"			
Designation	Attribute value	Explanation	l.chg. in ver.
	new		-

Elements									
Designation	Element name	Mandatory/ Optional	Single/ Multiple	Explanation	Default value	Data type	Field length	Lang. specific	l.chg. in ver.
	SUPPLIER_AID	Mandatory	Single		-	**dtSTRING**	32	-	-
Reference to supplier	**SUPPLIER_IDREF - type**	Optional	Single	Reference to the supplier. It contains the unique identifier (**PARTY_ID**) of the respective party that is defined in the document (element **PARTY**).	-	**dtSTRING**	250	-	2005fd
	ARTICLE_DETAILS	Mandatory	Single		-	-	-	-	-
	ARTICLE_FEATURES	Optional	Multiple		-	-	-	-	-
	ARTICLE_ORDER_ DETAILS	Mandatory	Single		-	-	-	-	-
	ARTICLE_PRICE_ DETAILS	Mandatory	Multiple		-	-	-	-	-
Additional multimedia information	**MIME_INFO**	Optional	Single	Information about multimedia files	-	-	-	-	-
User-defined extensions	**USER_DEFINED_ EXTENSIONS**	Optional	Single	This element can be used for transferring information in user-defined non-BMEcat-elements; hence it is possible to extend the pre-defined set of BMEcat-elements by user-defined ones. The usage of those elements results in BMEcat catalog documents, which can only be exchanged between the companies that have agreed on these extensions. The structure of these elements can be very complex, though it must be valid XML. **USER_DEFINED_EXTENSIONS** are defined exclusively as optional fields. Therefore, it is expressly pointed out that if user-defined extensions are used they must be compatible with the target systems and should be clarified on a case-to-case basis.	-	**udxPRODUCT**	-	-	-

Copyright © 2022 BME e.V. - BMEcat® Version 2005.2
Copyright © 2010-2021 BME e.V. - BMEcat® Version 2005.1
Copyright © 2005-2009 BME e.V. - BMEcat® Version 2005
Copyright © 1998–2004 Fraunhofer IAO, Stuttgart; Universität Essen BLI - BMEcat® Version 1.2

Elements

Designation	Element name	Mandatory/ Optional	Single/ Multiple	Explanation	Default value	Data type	Field length	Lang. specific	I.chg. in ver.
				The names of the elements must be clearly distinguishable from the names of other elements contained in the BMEcat standard. For this reason, all element must start with the string "UDX" (Example: <UDX.supplier.elementname>). The definition of user-defined extensions takes place by additional XML DTD or XML Schema files. **Example: usage of non-BMEcat elements (XML)** <PRODUCT mode="new"> <SUPPLIER_PID>100325235</SUPPLIER_PID> <PRODUCT_DETAILS> ... </PRODUCT_DETAILS> <ORDER_DETAILS> ... </ORDER_DETAILS> <USER_DEFINED_EXTENSIONS> <UDX.MYORG.PATENTNO>35120561614261</UDX.MYORG.PATENTNO> <UDX.MYORG.PATENTDATE>2004-11-14</UDX.MYORG.PATENTDATE> </USER_DEFINED_EXTENSIONS> </PRODUCT>					
	ARTICLE_REFERENCE **- type** **- quantity**	Optional	Multiple		-	-	-	-	-
	ARTICLE_CONTACTS	Optional	Single		-	-	-	-	-
	ARTICLE_LOGISTIC_ DETAILS	Optional	Single		-	-	-	-	-

Copyright © 2022 BME e.V. - BMEcat® Version 2005.2
Copyright © 2010-2021 BME e.V. - BMEcat® Version 2005.1
Copyright © 2005-2009 BME e.V. - BMEcat® Version 2005
Copyright © 1998–2004 Fraunhofer IAO, Stuttgart; Universität Essen BLI - BMEcat® Version 1.2

ARTICLE_DETAILS

()

Copyright © 2022 BME e.V. - BMEcat® Version 2005.2
Copyright © 2010-2021 BME e.V. - BMEcat® Version 2005.1
Copyright © 2005-2009 BME e.V. - BMEcat® Version 2005
Copyright © 1998–2004 Fraunhofer IAO, Stuttgart; Universität Essen BLI - BMEcat® Version 1.2

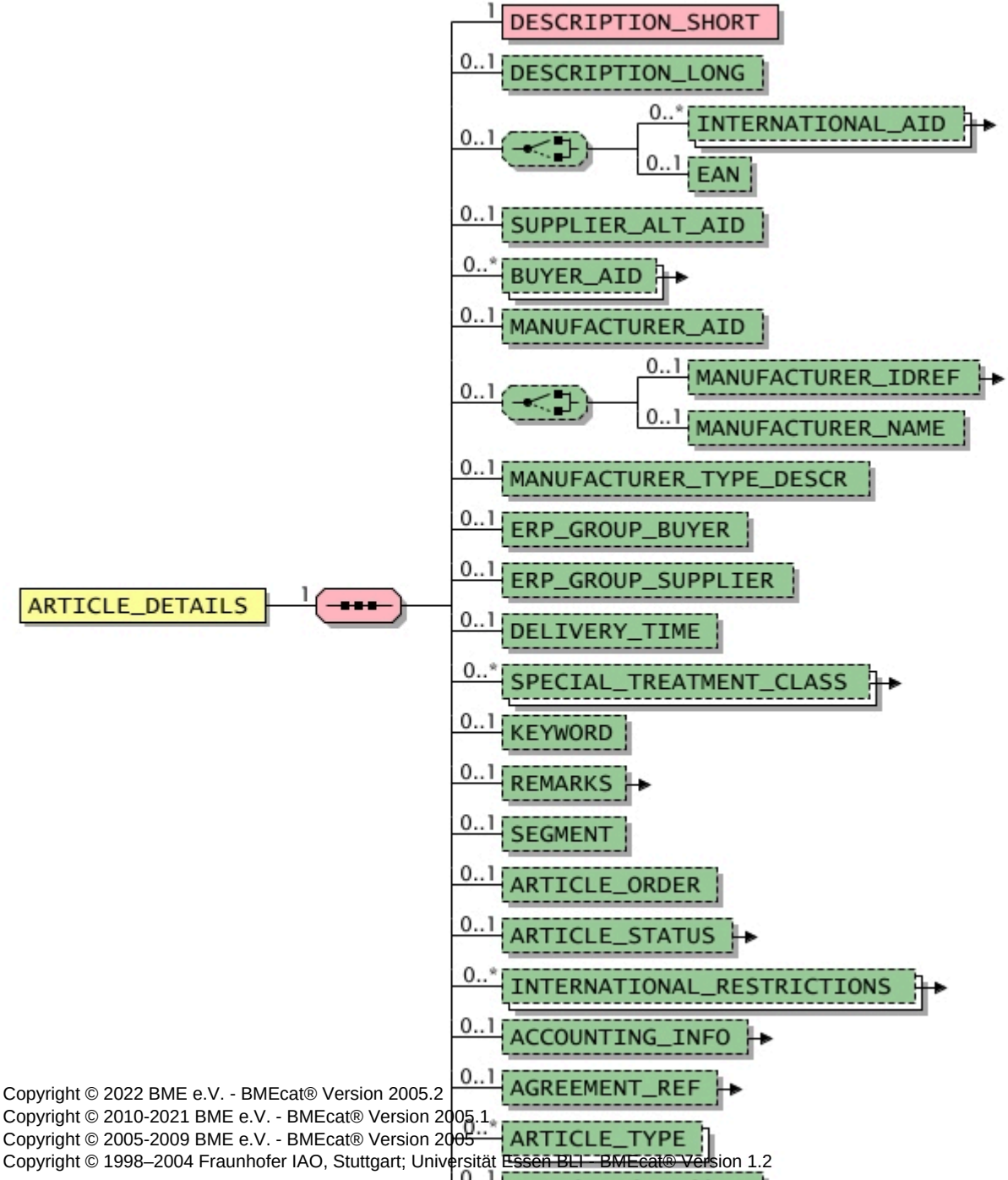

Copyright © 2022 BME e.V. - BMEcat® Version 2005.2
Copyright © 2010-2021 BME e.V. - BMEcat® Version 2005.1
Copyright © 2005-2009 BME e.V. - BMEcat® Version 2005
Copyright © 1998–2004 Fraunhofer IAO, Stuttgart; Universität Essen BLI - BMEcat® Version 1.2

General

Used in	Default value	Data type	Field length	Lang. specific	l.chg. in ver.
ARTICLE in context T_NEW_CATALOG, **ARTICLE** in context T_UPDATE_PRODUCTS	-	-	-	-	-

Elements

Designation	Element name	Mandatory/ Optional	Single/ Multiple	Explanation	Default value	Data type	Field length	Lang. specific	l.chg. in ver.
Short description	**DESCRIPTION_SHORT**	Mandatory	Single	This element contains the short description of the product. In general, the description should be short and, whithin the first 40 characters, unique and meaningful, because many software systems can only interpret these 40 characters (i.e. SAP-OCI, SAP R/3). Detailed descriptions are beneficial to product search, especially if many products are quite similar and differ only in specific details. In these cases, product search returns a list of products from which the right product can easily be determined. Abbreviations of essential product characteristics should be avoided (e.g., bw for black and white). However, abbreviations of organisations and standards can be used (e.g., ISO, VDE).	-	**dtMLSTRING**	150	Yes	-
Long description	**DESCRIPTION_LONG**	Optional	Single	This element contains the long description of the product. Format: The following HTML tags are supported: <b> for bold, <i> for italic, <p> for paragraphs, for line break and <ul>/<li> for lists. In order to transfer these, the characters '<' and '>' must be enclosed in quotation marks, or the BMEcat DTD will not be accepted by the XML parser (see also chapter **Character encoding in XML**). Example: '<' = < or '>' = > The target system must support the interpretation of the day in order to achieve the desired formatting.	-	**dtMLSTRING**	64000	Yes	1.2_fd
	INTERNATIONAL_AID **- type**	Optional	Multiple		-	**dtSTRING**	100	-	-
EAN	**EAN**	Optional	Single	This element contains the European Article Number (**http://www.ean-int.org**)	-	**dtSTRING**	14	-	-
	SUPPLIER_ALT_AID	Optional	Single		-	**dtSTRING**	50	-	-
	BUYER_AID **- type**	Optional	Multiple		-	**dtSTRING**	50	-	-
	MANUFACTURER_AID	Optional	Single		-	**dtSTRING**	50	-	-
Reference to the manufacturer	**MANUFACTURER_ IDREF** **- type**	Optional	Single	This element provides a reference to the manufacturer. It contains the unique identifier (**PARTY_ID**) of the respective party that is defined in the document (element **PARTY**).	-	**dtSTRING**	250	-	2005fd

Copyright © 2022 BME e.V. - BMEcat® Version 2005.2
Copyright © 2010-2021 BME e.V. - BMEcat® Version 2005.1
Copyright © 2005-2009 BME e.V. - BMEcat® Version 2005
Copyright © 1998–2004 Fraunhofer IAO, Stuttgart; Universität Essen BLI - BMEcat® Version 1.2

Elements

Designation	Element name	Mandatory/ Optional	Single/ Multiple	Explanation	Default value	Data type	Field length	Lang. specific	l.chg. in ver.
Name of manufacturer	**MANUFACTURER_ NAME**	Optional	Single	This element contains the name of the manufacturer of the product.	-	**dtSTRING**	50	-	-
Manufacturer type description	**MANUFACTURER_ TYPE_DESCR**	Optional	Single	The manufacturer's type description is a name for the product which may, in certain circumstances, be more widely-known than the correct product name. When a manufacturer's type description is specified, the name of the manufacturer must also be specified (**MANUFACTURER_NAME**).	-	**dtMLSTRING**	50	Yes	1.2_fd
ERP material group of the buying company	**ERP_GROUP_BUYER**	Optional	Single	Specifies the material group or material class of the article in the ERP system of the buying company Value range: Depends on buying firm's ERP (**BUYER**)	-	**dtSTRING**	10	-	-
ERP material group of the supplier	**ERP_GROUP_ SUPPLIER**	Optional	Single	Specifices the material group or material class of the article in the supplier's ERP system	-	**dtSTRING**	10	-	-
Scheduled delivery time	**DELIVERY_TIME**	Optional	Single	This element containts the time in working days needed by the supplier to deliver the product.	-	**dtNUMBER**	-	-	1.2_fd
Special treatment class	**SPECIAL_TREATMENT_ CLASS** **- type**	Optional	Multiple	Additional product classification used for hazardous goods or substances, primary pharmaceutical products, radioactive measuring equipment, etc. The "type" attribute specifies the dangerous goods classification scheme.	-	**dtSTRING**	20	-	-
Keyword	**KEYWORD**	Optional	Single	Keyword that supports product search in target systems	-	**dtMLSTRING**	50	Yes	-
Remark	**REMARKS** **- type**	Optional	Single	Remark related to a business document	-	**dtMLSTRING**	64000	Yes	-
Segment	**SEGMENT**	Optional	Single	Catalog segment ('generic product group') to which the product belongs Example: Plumbing supplies, Electrical supplies	-	**dtMLSTRING**	100	Yes	1.2_fd
	ARTICLE_ORDER	Optional	Single		-	**dtINTEGER**	-	-	-
	ARTICLE_STATUS **- type**	Optional	Single		-	**dtMLSTRING**	250	Yes	-
International delivery restrictions	**INTERNATIONAL_ RESTRICTIONS** **- type**	Optional	Multiple	Details of international restrictions, e.g. compulsory import / export authorization. 	-	**dtSTRING**	250	-	2005fd
Accounting information	**ACCOUNTING_INFO**	Optional	Single	Information on the accounting treatment of costs incurred by the buyer as a result of the order. This information is supplied by the buyer to allow the supplier to include it in the following invoice, thereby making invoice verification by the buyer easier. 	-	-	-	-	2005fd

Copyright © 2022 BME e.V. - BMEcat® Version 2005.2
Copyright © 2010-2021 BME e.V. - BMEcat® Version 2005.1
Copyright © 2005-2009 BME e.V. - BMEcat® Version 2005
Copyright © 1998–2004 Fraunhofer IAO, Stuttgart; Universität Essen BLI - BMEcat® Version 1.2

Elements

Designation	Element name	Mandatory/ Optional	Single/ Multiple	Explanation	Default value	Data type	Field length	Lang. specific	l.chg. in ver.
Skeleton agreement reference	**AGREEMENT_REF**	Optional	Single	Reference to a skeleton agreement (**AGREEMENT**), which has been named in the document header.	-	-	-	-	2005fd
	ARTICLE_TYPE	Optional	Multiple	See also: **Permitted values for element ARTICLE_TYPE**	-	**dtSTRING**	50	-	-
	ARTICLE_CATEGORY	Optional	Single	See also: **Permitted values for element ARTICLE_CATEGORY**	-	**dtSTRING**	20	-	-

Permitted values for element ARTICLE_TYPE

Designation	Element value	Explanation	l.chg. in ver.
	bundle		-
	component		-
	configurable		-
	contract		-
	license		-
	major		-
	minor		-
	must_be_configured		-
	physical		-
	professional_services		-
	service		-

Permitted values for element ARTICLE_CATEGORY

Designation	Element value	Explanation	l.chg. in ver.
	consignment		-
	core_product		-
	preferred		-
	standard		-
	stock		-

Copyright © 2022 BME e.V. - BMEcat® Version 2005.2
Copyright © 2010-2021 BME e.V. - BMEcat® Version 2005.1
Copyright © 2005-2009 BME e.V. - BMEcat® Version 2005
Copyright © 1998–2004 Fraunhofer IAO, Stuttgart; Universität Essen BLI - BMEcat® Version 1.2

Permitted values for element ARTICLE_CATEGORY			
Designation	Element value	Explanation	l.chg. in ver.
	others		-

Copyright © 2022 BME e.V. - BMEcat® Version 2005.2
Copyright © 2010-2021 BME e.V. - BMEcat® Version 2005.1
Copyright © 2005-2009 BME e.V. - BMEcat® Version 2005
Copyright © 1998–2004 Fraunhofer IAO, Stuttgart; Universität Essen BLI - BMEcat® Version 1.2

INTERNATIONAL_AID

()

General					
Used in	Default value	Data type	Field length	Lang. specific	l.chg. in ver.
ARTICLE_DETAILS	-	**dtSTRING**	100	-	-

Attributes								
Designation	Attribute name	Mandatory/ optional	Explanation	Default value	Data type	Field length	Lang. specific	l.chg. in ver.
	type	Optional	See also: **Predefined values for attribute "type"**	-	**dtSTRING**	50	-	-

Predefined values for attribute "type"			
Designation	Attribute value	Explanation	l.chg. in ver.
	ean		-
	gtin		-
	upc		-
	User defined value, format: \w{1,50}		-

Copyright © 2022 BME e.V. - BMEcat® Version 2005.2
Copyright © 2010-2021 BME e.V. - BMEcat® Version 2005.1
Copyright © 2005-2009 BME e.V. - BMEcat® Version 2005
Copyright © 1998–2004 Fraunhofer IAO, Stuttgart; Universität Essen BLI - BMEcat® Version 1.2

BUYER_AID

()

General					
Used in	Default value	Data type	Field length	Lang. specific	l.chg. in ver.
ARTICLE_DETAILS	-	**dtSTRING**	50	-	-

Attributes								
Designation	Attribute name	Mandatory/ optional	Explanation	Default value	Data type	Field length	Lang. specific	l.chg. in ver.
	type	Optional	See also: **Predefined values for attribute "type"**	-	**dtSTRING**	50	-	-

Predefined values for attribute "type"			
Designation	Attribute value	Explanation	l.chg. in ver.
	buyer_specific		-
	ean		-
	gtin		-
	upc		-
	User defined value, format: \w{1,50}		-

Copyright © 2022 BME e.V. - BMEcat® Version 2005.2
Copyright © 2010-2021 BME e.V. - BMEcat® Version 2005.1
Copyright © 2005-2009 BME e.V. - BMEcat® Version 2005
Copyright © 1998–2004 Fraunhofer IAO, Stuttgart; Universität Essen BLI - BMEcat® Version 1.2

ARTICLE_STATUS

()

General					
Used in	Default value	Data type	Field length	Lang. specific	l.chg. in ver.
ARTICLE_DETAILS	-	**dtMLSTRING**	250	Yes	-

Attributes								
Designation	Attribute name	Mandatory/ optional	Explanation	Default value	Data type	Field length	Lang. specific	l.chg. in ver.
	type	Mandatory	See also: **Permitted values for attribute "type"**	-	**dtSTRING**	20	-	-

Permitted values for attribute "type"			
Designation	Attribute value	Explanation	l.chg. in ver.
	bargain		-
	core_product		-
	new		-
	new_product		-
	old_product		-
	refurbished		-
	used		-
	others		-

Copyright © 2022 BME e.V. - BMEcat® Version 2005.2
Copyright © 2010-2021 BME e.V. - BMEcat® Version 2005.1
Copyright © 2005-2009 BME e.V. - BMEcat® Version 2005
Copyright © 1998–2004 Fraunhofer IAO, Stuttgart; Universität Essen BLI - BMEcat® Version 1.2

ARTICLE_FEATURES

()

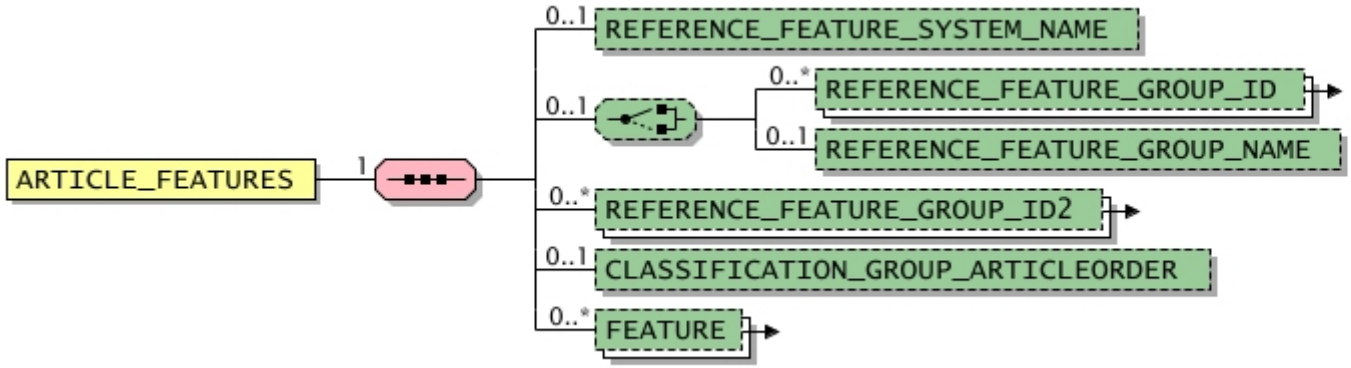

General

Used in	Default value	Data type	Field length	Lang. specific	I.chg. in ver.
ARTICLE in context T_NEW_CATALOG, **ARTICLE** in context T_UPDATE_PRODUCTS	-	-	-	-	-

Elements

Designation	Element name	Mandatory/ Optional	Single/ Multiple	Explanation	Default value	Data type	Field length	Lang. specific	I.chg. in ver.
Classification or feature system	**REFERENCE_ FEATURE_SYSTEM_ NAME**	Optional	Single	Name of the referenced classification or feature system If the classification system is transferred by the **T_NEW_CATALOG** transaction and its **CLASSIFICATION_SYSTEM** element, the value of this element must be equal with the name defined in **CLASSIFICATION_SYSTEM_NAME**. Remark: The format for the name (**CLASSIFICATION_SYSTEM_NAME**) should comply with the following structure: "<Name>-<Major Version>.<Minor Version> See also: **Predefined values for element REFERENCE_FEATURE_SYSTEM_NAME** **Examples** ECLASS-4.1, UNSPSC-6.0801	-	**dtSTRING**	80	-	-

Copyright © 2022 BME e.V. - BMEcat® Version 2005.2
Copyright © 2010-2021 BME e.V. - BMEcat® Version 2005.1
Copyright © 2005-2009 BME e.V. - BMEcat® Version 2005
Copyright © 1998–2004 Fraunhofer IAO, Stuttgart; Universität Essen BLI - BMEcat® Version 1.2

Elements									
Designation	Element name	Mandatory/ Optional	Single/ Multiple	Explanation	Default value	Data type	Field length	Lang. specific	l.chg. in ver.
				<REFERENCE_FEATURE_SYSTEM_NAME>ECLASS-4.1 </REFERENCE_FEATURE_SYSTEM_NAME>					
Group reference	**REFERENCE_ FEATURE_GROUP_ID - type**	Optional	Multiple	Reference to the unique identifier of an existing group of the respective classification system; this element may only be used if the **REFERENCE_FEATURE_GROUP_ NAME** element is not used.	-	**dtSTRING**	60	-	-
Group name reference	**REFERENCE_ FEATURE_GROUP_ NAME**	Optional	Single	Reference to the unique, though language-dependent name of an existing group of the respective classification system This element may only be used if the **REFERENCE_FEATURE_GROUP_ID** element is not used. Notice: The group can also be referenced by its language-independent identifier (see **REFERENCE_FEATURE_GROUP_ID**).	-	**dtMLSTRING**	60	Yes	-
Additional group reference	**REFERENCE_ FEATURE_GROUP_ID2 - type**	Optional	Multiple	This element provides an additional identifier of the same group which has already been referenced in the **REFERENCE_FEATURE_GROUP_ID** element. The element should be only if the classification system defines two different identifier for the same group. When classifying product according to eCl@ss, this element has to be filled with the eCl@ss field 'idcl' (primary key) and the 'type' attribute has to be set to 'flat'.	-	**dtSTRING**	60	-	2005fd
	CLASSIFICATION_ GROUP_ ARTICLEORDER	Optional	Single		-	**dtINTEGER**	-	-	-
Product feature	**FEATURE**	Optional	Multiple	Information about a single product feature	-	-	-	-	2005.2

Predefined values for element REFERENCE_FEATURE_SYSTEM_NAME			
Designation	Element value	Explanation	l.chg. in ver.
CPV	CPV-yyyy-mm-dd	Reference to the classification system CPV (Common Procurement Vocabulary) with version date (e.g., CPV-2003-12-16); see siehe **http://simap.eu.int**	2005fd
eCl@ss	ECLASS-x.y	Reference to the classification system eCl@ss with major version x and minor version y (e.g., ECLASS-5.1); see **http://www.eclass-online.com**	-
eOTD	EOTD-yyyy-mm-dd	Reference to the classification system eOTD (ECCMA Open Technical Dictionary) with version date (e.g., EOTD-2004-08-01); see **http://www.eccma.org**	2005fd
ETIM	ETIM-x.y	Reference to the classification system ETIM with major version x and minor version y (e.g., ETIM-2.0); see **http://www.etim.de**	-

Copyright © 2022 BME e.V. - BMEcat® Version 2005.2
Copyright © 2010-2021 BME e.V. - BMEcat® Version 2005.1
Copyright © 2005-2009 BME e.V. - BMEcat® Version 2005
Copyright © 1998–2004 Fraunhofer IAO, Stuttgart; Universität Essen BLI - BMEcat® Version 1.2

Predefined values for element REFERENCE_FEATURE_SYSTEM_NAME			
Designation	Element value	Explanation	l.chg. in ver.
GPC	GPC-x.y	Reference to the classification system EAN.UCC GPC (Global Product Classification) with major version x and minor version y (e.g., GPC-4.0); see **http://www.gs1.org**	2005fd
profiCl@ss	PROFICLASS-x.y	Reference to the classification system profiCl@ss with major version x and minor version y (e.g., PROFICLASS-2.1); see **http://www.proficlass.de**	2005fd
RNTD	RNTD-x.y	Reference to the classification system RNTD (RosettaNet Technical Dictionary) with major version x and minor version y (e.g., RNTD-4.0); see **http://www.rosettanet.org**	2005fd
RUS	RUS-x.y	Reference to the classification system RUS (Requisite Unifying Structure) with major version x and minor version y (e.g., RUS-4.0); see **http://rusportal.requisite.com**	2005fd
UNSPSC	UNSPSC-x.yyyy	Reference to the classification system UNSPSC with major version x and minor version y (e.g., UNSPSC-6.0801); see **http://www.unspsc.org**	-
Proprietary classification system	udf_NAME-x.y	Reference to a proprietary (non-standard) classification system. The value has to start with 'udf_' followed by the classification system name in capital letters, hyphen, and version (major version x and minor version y). For example: udf_MYSYSTEM-3.0. The length of the name is limited to 72 characters; the version to 7 characters.	-
Other classification system	User defined value, format: [\w\-\.]{1,80}	Other standard classification system, which is not pre-defined in BMEcat, can be described in a similar way: The name of the system in capital, followed by a hyphen and the version information. For instance, NAME-3.4. The length of the name is limited to 72 characters. The version information, where major and minor version are separated by a dot, is limited to 7 characters.	2005fd

Copyright © 2022 BME e.V. - BMEcat® Version 2005.2
Copyright © 2010-2021 BME e.V. - BMEcat® Version 2005.1
Copyright © 2005-2009 BME e.V. - BMEcat® Version 2005
Copyright © 1998–2004 Fraunhofer IAO, Stuttgart; Universität Essen BLI - BMEcat® Version 1.2

ARTICLE_ORDER_DETAILS

()

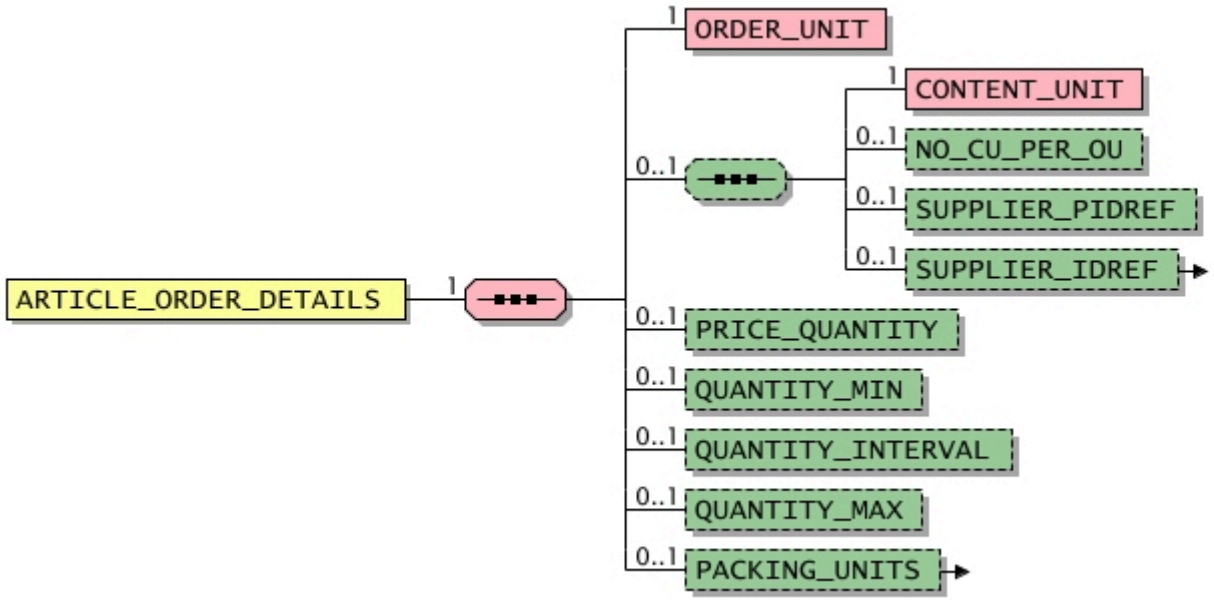

General					
Used in	Default value	Data type	Field length	Lang. specific	l.chg. in ver.
ARTICLE in context T_NEW_CATALOG, **ARTICLE** in context T_UPDATE_PRODUCTS	-	-	-	-	-

Elements									
Designation	Element name	Mandatory/ Optional	Single/ Multiple	Explanation	Default value	Data type	Field length	Lang. specific	l.chg. in ver.
Order unit	**ORDER_UNIT**	Mandatory	Single	Unit in which the product can be ordered; it is only possible to order multiples of the product unit. The price also always refers to this unit (or to part of or multiples of it). Example: Crate of mineral water with 6 bottles Order unit: "crate", contents unit/unit of the article: "bottle" Packing quantity: "6"	-	**dtPUNIT**	-	-	-

Copyright © 2022 BME e.V. - BMEcat® Version 2005.2
Copyright © 2010-2021 BME e.V. - BMEcat® Version 2005.1
Copyright © 2005-2009 BME e.V. - BMEcat® Version 2005
Copyright © 1998–2004 Fraunhofer IAO, Stuttgart; Universität Essen BLI - BMEcat® Version 1.2

Elements

Designation	Element name	Mandatory/ Optional	Single/ Multiple	Explanation	Default value	Data type	Field length	Lang. specific	l.chg. in ver.
Content of the unit	**CONTENT_UNIT**	Mandatory	Single	Unit of the product related to the order unit	-	**dtPUNIT**	-	-	-
Packing quantity	**NO_CU_PER_OU**	Optional	Single	Number of content units per order unit of the product 2005: A default value was added.	1	**dtNUMBER**	-	-	2005
Reference to a product number	**SUPPLIER_PIDREF**	Optional	Single	This element provides a reference to a product number of the supplier. It contains the unique identifier (**SUPPLIER_PID**) that is defined in the document. 2005fd: This new element replaces the **ART_ID_TO** element.	-	**dtSTRING**	32	-	2005fd
Reference to supplier	**SUPPLIER_IDREF - type**	Optional	Single	Reference to the supplier. It contains the unique identifier (**PARTY_ID**) of the respective party that is defined in the document (element **PARTY**). 	-	**dtSTRING**	250	-	2005fd
Price quantity	**PRICE_QUANTITY**	Optional	Single	If nothing is specified in this field the default value 1 is assumed, in other words the price refers to exactly one order unit. If specified, a multiple or a fraction of the order unit (element **ORDER_UNIT**) which indicates the quantity to which all the specified prices refer. Example: 10 (i.e. the specified price refers to 10 crates) 2005: A default value was added.	1	**dtNUMBER**	-	-	2005
Minimum quantity	**QUANTITY_MIN**	Optional	Single	 2005fd: The data type has beend changed from **dtINTEGER** to **dtFLOAT**. 2005: A default value was added.	1	**dtFLOAT**	-	-	2005
Quantity interval	**QUANTITY_INTERVAL**	Optional	Single	Number indicating the quantity steps in which the articles can be ordered. The first step always corresponds to the minimum order quantity specified. The unit of the quantity interval is the same as the order unit. Example: 1 (i.e. 5, 6, 7, ... crates) Example: 2 (i.e. 4, 6, 8, ... crates) 2005fd: The data type has been changed from **dtINTEGER** to **dtFLOAT**. 2005: A default value was added.	1	**dtFLOAT**	-	-	2005
Maximum quantity	**QUANTITY_MAX**	Optional	Single		-	**dtFLOAT**	-	-	2005fd

Copyright © 2022 BME e.V. - BMEcat® Version 2005.2
Copyright © 2010-2021 BME e.V. - BMEcat® Version 2005.1
Copyright © 2005-2009 BME e.V. - BMEcat® Version 2005
Copyright © 1998–2004 Fraunhofer IAO, Stuttgart; Universität Essen BLI - BMEcat® Version 1.2

Elements

Designation	Element name	Mandatory/ Optional	Single/ Multiple	Explanation	Default value	Data type	Field length	Lang. specific	l.chg. in ver.
				2005fd: New element					
Packing units	**PACKING_UNITS**	Optional	Single	Information on the dependency of the packing unit from the order unit. Example: Printing paper á 500 sheets has the order unit pack; ordering 5 packs results in a new packing unit, karton; ordering 50 packs or 10 cartons results in another packing unit, covering box; ordering 500 packs or 100 cartons results in the biggest packing unit here, palette.	-	-	-	-	2005fd

Copyright © 2022 BME e.V. - BMEcat® Version 2005.2
Copyright © 2010-2021 BME e.V. - BMEcat® Version 2005.1
Copyright © 2005-2009 BME e.V. - BMEcat® Version 2005
Copyright © 1998–2004 Fraunhofer IAO, Stuttgart; Universität Essen BLI - BMEcat® Version 1.2

ARTICLE_PRICE_DETAILS

()

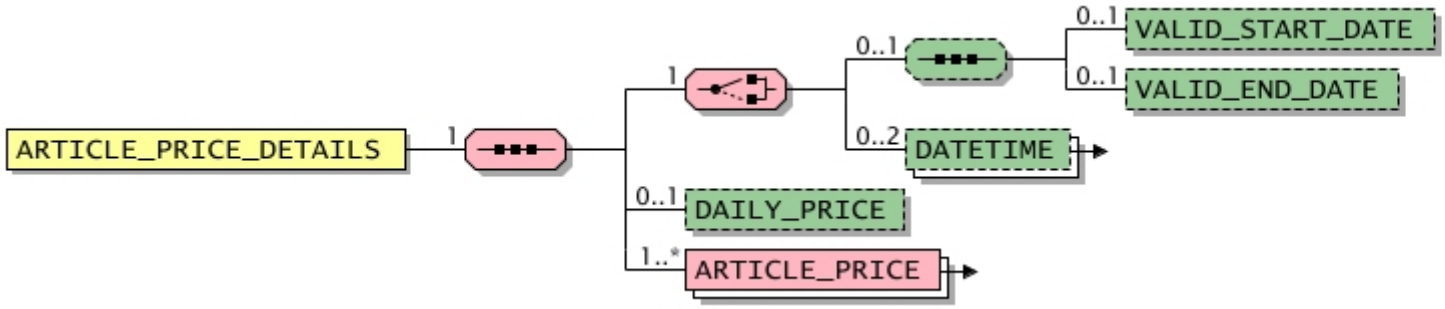

General					
Used in	Default value	Data type	Field length	Lang. specific	l.chg. in ver.
ARTICLE in context T_NEW_CATALOG, **ARTICLE** in context T_UPDATE_PRICES, **ARTICLE** in context T_UPDATE_PRODUCTS	-	-	-	-	-

Elements

Designation	Element name	Mandatory/ Optional	Single/ Multiple	Explanation	Default value	Data type	Field length	Lang. specific	l.chg. in ver.
Valid start date	**VALID_START_DATE**	Optional	Single	Dates for the beginning of the period of validity 2005fd: This new element replaces with a modified semantics the **DATETIME** in the context of PRODUCT_PRICE_DETAILS element and its attribute type='valid_start_date'.	-	**dtDATETIME**	-	-	2005fd
Valid end date	**VALID_END_DATE**	Optional	Single	Date for the end of the period of validity 2005fd: This new element replaces with a modified semantics the **DATETIME** in the context of PRODUCT_PRICE_DETAILS element and its attribute type='valid_end_date'.	-	**dtDATETIME**	-	-	2005fd
Date	**DATETIME** in the context of CATALOG **- type**	Optional	Multiple (2)	The element is used to precisely define a time. It is made up of the three elements date, time and time zone.	-	-	-	-	-

Copyright © 2022 BME e.V. - BMEcat® Version 2005.2
Copyright © 2010-2021 BME e.V. - BMEcat® Version 2005.1
Copyright © 2005-2009 BME e.V. - BMEcat® Version 2005
Copyright © 1998–2004 Fraunhofer IAO, Stuttgart; Universität Essen BLI - BMEcat® Version 1.2

Elements									
Designation	Element name	Mandatory/ Optional	Single/ Multiple	Explanation	Default value	Data type	Field length	Lang. specific	l.chg. in ver.
Daily price	**DAILY_PRICE**	Optional	Single	If the value of this field is “true”, the product prices may be subject to considerable daily fluctuations (e.g., additional charges for metals) and must therefore be seen as recommended prices only. The exact prices must then be calculated either using an external system or manually (e.g., by contacting the supplier). If nothing is specified in this field or if “false” is specified, the prices are assumed to be fixed.	-	**dtBOOLEAN**	-	-	-
	ARTICLE_PRICE **- price_type**	Mandatory	Multiple		-	-	-	-	-

Copyright © 2022 BME e.V. - BMEcat® Version 2005.2
Copyright © 2010-2021 BME e.V. - BMEcat® Version 2005.1
Copyright © 2005-2009 BME e.V. - BMEcat® Version 2005
Copyright © 1998–2004 Fraunhofer IAO, Stuttgart; Universität Essen BLI - BMEcat® Version 1.2

DATETIME in the context of CATALOG

(Date)

The element is used to precisely define a time. It is made up of the three elements date, time and time zone.

DATETIME is used at various places within the BMEcat formats. The description of the time involved is carried out through the attribute '**type**' which can accept various pre-defined values.

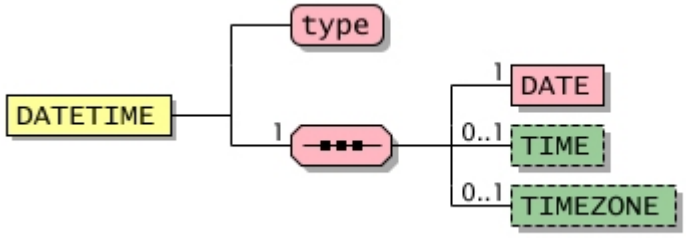

General					
Used in	Default value	Data type	Field length	Lang. specific	I.chg. in ver.
ARTICLE_PRICE_DETAILS	-	-	-	-	-

Attributes								
Designation	Attribute name	Mandatory/ optional	Explanation	Default value	Data type	Field length	Lang. specific	I.chg. in ver.
Date type	type	Mandatory	Specifies the date type in more detail.; Value range: depending on context See also: **Permitted values for attribute "type"**	-	**dtSTRING**	20	-	-

Permitted values for attribute "type"			
Designation	Attribute value	Explanation	I.chg. in ver.
Valid start date	valid_start_date	Date on which a price becomes valid; is used in the element **PRODUCT_PRICE_DETAILS**	-
Valid end date	valid_end_date	Date on which a price becomes invalid; is used in the element **PRODUCT_PRICE_DETAILS**	-

Copyright © 2022 BME e.V. - BMEcat® Version 2005.2
Copyright © 2010-2021 BME e.V. - BMEcat® Version 2005.1
Copyright © 2005-2009 BME e.V. - BMEcat® Version 2005
Copyright © 1998–2004 Fraunhofer IAO, Stuttgart; Universität Essen BLI - BMEcat® Version 1.2

Elements									
Designation	Element name	Mandatory/ Optional	Single/ Multiple	Explanation	Default value	Data type	Field length	Lang. specific	l.chg. in ver.
Date	**DATE**	Mandatory	Single	Date	-	**dtDATETYPE**	-	-	-
Time	**TIME**	Optional	Single	Element for time	-	**dtTIMETYPE**	-	-	-
Time zone	**TIMEZONE**	Optional	Single	Element for timezone	-	**dtTIMEZONETYPE**	-	-	-

Example
The skeleton agreement comes into effect on 25 October, 2000 at 23:13 hrs GMT.

```
<DATETIME type="agreement_start_date">
    <DATE>2000-10-25</DATE>
    <TIME>23:13:00</TIME>
    <TIMEZONE>GMT</TIMEZONE>
</DATETIME>
```

Copyright © 2022 BME e.V. - BMEcat® Version 2005.2
Copyright © 2010-2021 BME e.V. - BMEcat® Version 2005.1
Copyright © 2005-2009 BME e.V. - BMEcat® Version 2005
Copyright © 1998–2004 Fraunhofer IAO, Stuttgart; Universität Essen BLI - BMEcat® Version 1.2

ARTICLE_PRICE

()

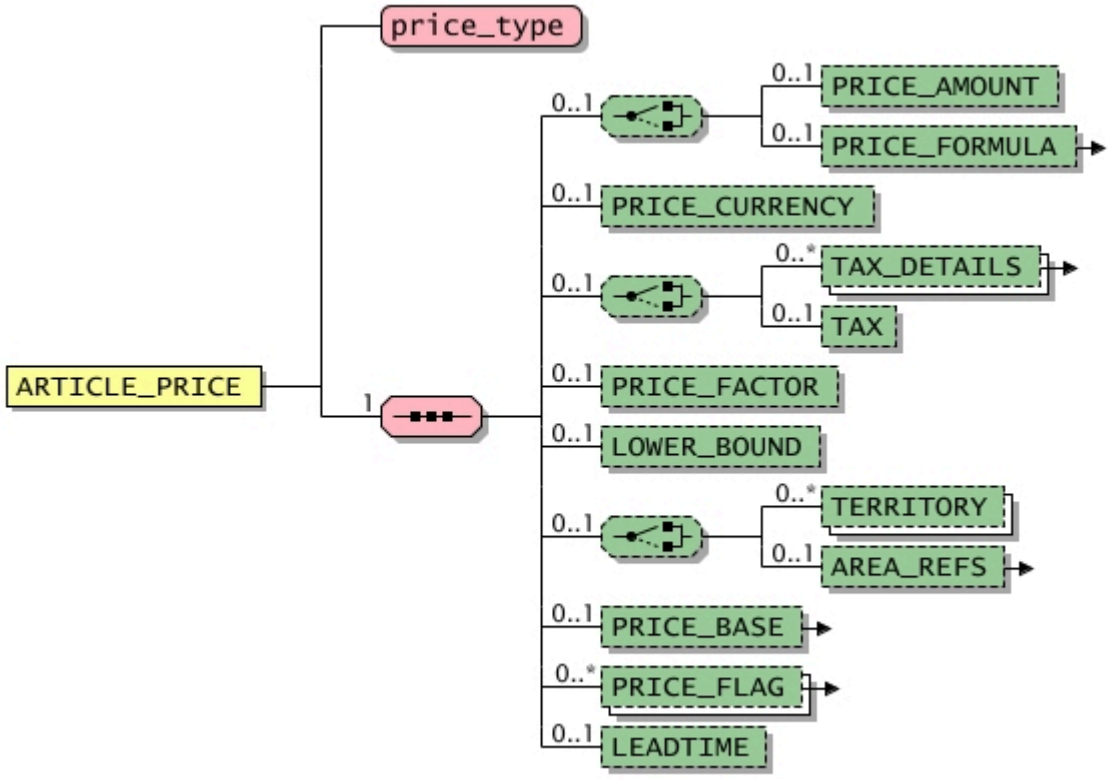

General					
Used in	Default value	Data type	Field length	Lang. specific	l.chg. in ver.
ARTICLE_PRICE_DETAILS	-	-	-	-	-

Copyright © 2022 BME e.V. - BMEcat® Version 2005.2
Copyright © 2010-2021 BME e.V. - BMEcat® Version 2005.1
Copyright © 2005-2009 BME e.V. - BMEcat® Version 2005
Copyright © 1998–2004 Fraunhofer IAO, Stuttgart; Universität Essen BLI - BMEcat® Version 1.2

Attributes

Designation	Attribute name	Mandatory/ optional	Explanation	Default value	Data type	Field length	Lang. specific	I.chg. in ver.
	price_type	Mandatory	See also: **Predefined values for attribute "price_type"**	-	**dtSTRING**	20	-	-

Predefined values for attribute "price_type"

Designation	Attribute value	Explanation	I.chg. in ver.
	gros_list		-
	net_customer		-
	net_customer_exp		-
	net_list		-
	nrp		-
	on_request		-
	User defined value, format: udp_\w{1,16}		-

Elements

Designation	Element name	Mandatory/ Optional	Single/ Multiple	Explanation	Default value	Data type	Field length	Lang. specific	I.chg. in ver.
Price amount	**PRICE_AMOUNT**	Optional	Single	Amount of the price	-	**dtNUMBER**	-	-	-
Price formula	**PRICE_FORMULA**	Optional	Single	Formel for price calculation	-	-	-	-	2005fd
Price currency	**PRICE_CURRENCY**	Optional	Single	Currency of the price If nothing is specified in this field, the currency defined in the document header (**HEADER**) in the element **CURRENCY** is used for all prices.	-	**dtCURRENCIES**		-	-
Tax details	**TAX_DETAILS**	Optional	Multiple	Specification of one applicapable tax	-	-	-	-	2005
Tax rate	**TAX**	Optional	Single	Factor for tax applicable to this price. Example: "0.16", corresponds to 16 percent.	-	**dtNUMBER**	-	-	-
Price factor	**PRICE_FACTOR**	Optional	Single	The (discount) factor always multiplied by the price specified in this element in order to determine the end price.	1	**dtNUMBER**	-	-	2005

Copyright © 2022 BME e.V. - BMEcat® Version 2005.2
Copyright © 2010-2021 BME e.V. - BMEcat® Version 2005.1
Copyright © 2005-2009 BME e.V. - BMEcat® Version 2005
Copyright © 1998–2004 Fraunhofer IAO, Stuttgart; Universität Essen BLI - BMEcat® Version 1.2

Elements									
Designation	Element name	Mandatory/ Optional	Single/ Multiple	Explanation	Default value	Data type	Field length	Lang. specific	l.chg. in ver.
				2005: A default value was added.					
Lower quantity limit	**LOWER_BOUND**	Optional	Single	Lower quantity limit for graduated prices. The unit for the graduated price limit is the order unit (**ORDER_UNIT**). Note: the upper graduated price limit is determined by the **LOWER_BOUND** value of the next price. If there are no more graduations, the price applies to all quantities which are higher than the lower graduated price limit.	-	**dtNUMBER**	-	-	-
Territory	**TERRITORY**	Optional	Multiple	Territory (i.e. country, state, region) coded according to ISO 3166	-	**dtCOUNTRIES**	-	-	1.2_fd
Area references	**AREA_REFS**	Optional	Single	List of references to areas 	-	-	-	-	2005fd
Price basis	**PRICE_BASE**	Optional	Single	Contains the price basis consisting of price unit and price factor, it defines the basis of a price. 	-	-	-	-	2005fd
Price flag	**PRICE_FLAG - type**	Optional	Multiple	Base of a price (e.g. with/without freight)	-	**dtBOOLEAN**	-	-	-
Leadtime	**LEADTIME**	Optional	Single	Leadtime in working days defined as the interval between the receipt of the order and the earliest arrival at the customer 2005fd: This new element replaces with a modified semantics the former **DELIVERY_TIME** element.	-	**dtFLOAT**	-	-	2005fd

Copyright © 2022 BME e.V. - BMEcat® Version 2005.2
Copyright © 2010-2021 BME e.V. - BMEcat® Version 2005.1
Copyright © 2005-2009 BME e.V. - BMEcat® Version 2005
Copyright © 1998–2004 Fraunhofer IAO, Stuttgart; Universität Essen BLI - BMEcat® Version 1.2

ARTICLE_REFERENCE

()

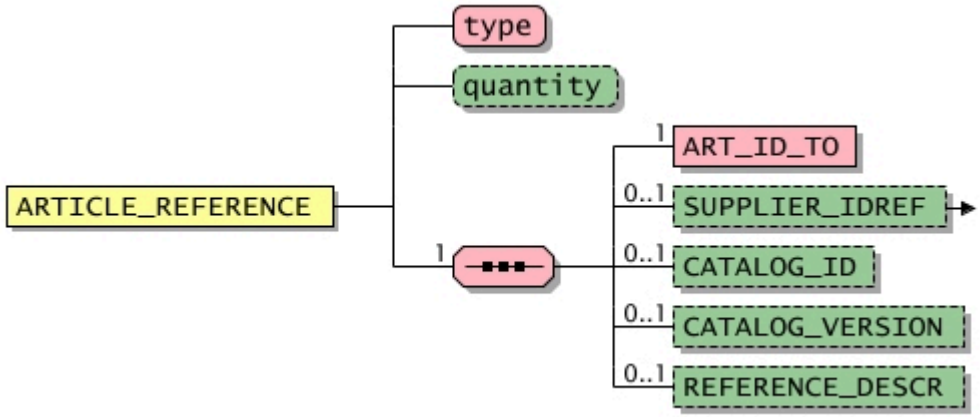

General					
Used in	Default value	Data type	Field length	Lang. specific	l.chg. in ver.
ARTICLE in context T_NEW_CATALOG, **ARTICLE** in context T_UPDATE_PRODUCTS	-	-	-	-	-

Attributes								
Designation	Attribute name	Mandatory/ optional	Explanation	Default value	Data type	Field length	Lang. specific	l.chg. in ver.
	type	Mandatory	See also: **Permitted values for attribute "type"**	-	**dtSTRING**	20	-	-
	quantity	Optional		-	**dtINTEGER**	-	-	-

Permitted values for attribute "type"			
Designation	Attribute value	Explanation	l.chg. in ver.
	accessories		-
	base_product		-
	consists_of		-

Copyright © 2022 BME e.V. - BMEcat® Version 2005.2
Copyright © 2010-2021 BME e.V. - BMEcat® Version 2005.1
Copyright © 2005-2009 BME e.V. - BMEcat® Version 2005
Copyright © 1998–2004 Fraunhofer IAO, Stuttgart; Universität Essen BLI - BMEcat® Version 1.2

Permitted values for attribute "type"

Designation	Attribute value	Explanation	l.chg. in ver.
	diff_orderunit		-
	followup		-
Mandatory additional product	mandatory	The reference product listed under **PROD_ID_TO** is a mandatory additional product which must always be ordered at the same time as the product article. The source product described cannot be ordered alone. If several products are marked "mandatory" they must all be ordered together with the source product. 2005: This value was erased in version 2005fd by accident and was reinserted in version 2005.	2005
	similar		-
	select		-
	sparepart		-
	others		-

Elements

Designation	Element name	Mandatory/ Optional	Single/ Multiple	Explanation	Default value	Data type	Field length	Lang. specific	l.chg. in ver.
	ART_ID_TO	Mandatory	Single		-	**dtSTRING**	80	-	-
Reference to supplier	**SUPPLIER_IDREF - type**	Optional	Single	Reference to the supplier. It contains the unique identifier (**PARTY_ID**) of the respective party that is defined in the document (element **PARTY**).	-	**dtSTRING**	250	-	2005fd
Catalog ID	**CATALOG_ID**	Optional	Single	Unique catalog identification. This ID is usually assigned by the supplier when the catalog is generated and remains unchanged throughout the entire lifecycle of the catalog.	-	**dtSTRING**	20	-	-
Catalog version	**CATALOG_VERSION**	Optional	Single	Version number of the catalog. May only be reset on the target system in conjunction with a **T_NEW_CATALOG** transaction and not in the case of updates, see also example (**Interaction of various transactions**). Format: "MajorVersion"."MinorVersion" (maximum xxx.yyy) **Example** 001.120 7.3	-	**dtSTRING**	7	-	1.2_fd
Reference description	**REFERENCE_DESCR**	Optional	Single	This element can be used to describe the reference.	-	**dtMLSTRING**	250	Yes	2005fd

Copyright © 2022 BME e.V. - BMEcat® Version 2005.2
Copyright © 2010-2021 BME e.V. - BMEcat® Version 2005.1
Copyright © 2005-2009 BME e.V. - BMEcat® Version 2005
Copyright © 1998–2004 Fraunhofer IAO, Stuttgart; Universität Essen BLI - BMEcat® Version 1.2

Elements									
Designation	Element name	Mandatory/ Optional	Single/ Multiple	Explanation	Default value	Data type	Field length	Lang. specific	l.chg. in ver.
				2005fd: New element					

Copyright © 2022 BME e.V. - BMEcat® Version 2005.2
Copyright © 2010-2021 BME e.V. - BMEcat® Version 2005.1
Copyright © 2005-2009 BME e.V. - BMEcat® Version 2005
Copyright © 1998–2004 Fraunhofer IAO, Stuttgart; Universität Essen BLI - BMEcat® Version 1.2

ARTICLE_CONTACTS

()

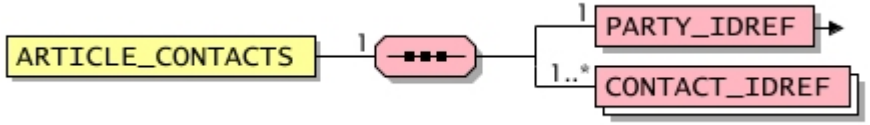

General					
Used in	Default value	Data type	Field length	Lang. specific	l.chg. in ver.
ARTICLE in context T_NEW_CATALOG, **ARTICLE** in context T_UPDATE_PRODUCTS	-	-	-	-	-

Elements

Designation	Element name	Mandatory/ Optional	Single/ Multiple	Explanation	Default value	Data type	Field length	Lang. specific	l.chg. in ver.
Reference to a business partner	**PARTY_IDREF - type**	Mandatory	Single	Reference to a business partner. It contains the unique identifier (**PARTY_ID**) of the respective party (element **PARTY**).	-	**dtSTRING**	250	-	2005fd
Reference to a contact	**CONTACT_IDREF**	Mandatory	Multiple	This element provides a reference to a contact. It contains the unique identifier **CONTACT_ID** that is defined for the partner, which has been referenced in the **PARTY_IDREF** element. 2005fd: New element 2005: The maximum length has been extended from 50 characters to 60 characters.	-	**dtSTRING**	60	-	2005

Copyright © 2022 BME e.V. - BMEcat® Version 2005.2
Copyright © 2010-2021 BME e.V. - BMEcat® Version 2005.1
Copyright © 2005-2009 BME e.V. - BMEcat® Version 2005
Copyright © 1998–2004 Fraunhofer IAO, Stuttgart; Universität Essen BLI - BMEcat® Version 1.2

ARTICLE_LOGISTIC_DETAILS

()

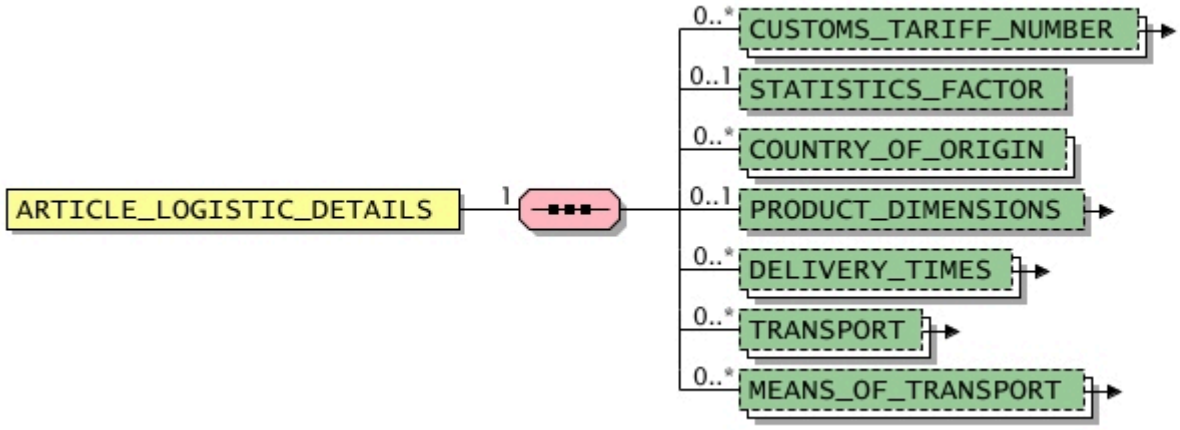

General

Used in	Default value	Data type	Field length	Lang. specific	I.chg. in ver.
ARTICLE in context T_NEW_CATALOG, **ARTICLE** in context T_UPDATE_PRODUCTS	-	-	-	-	-

Elements

Designation	Element name	Mandatory/ Optional	Single/ Multiple	Explanation	Default value	Data type	Field length	Lang. specific	I.chg. in ver.
Customs tariff number	**CUSTOMS_TARIFF_ NUMBER**	Optional	Multiple	Information on the customs tariff number	-	-	-	-	2005fd
Statistics factor	**STATISTICS_FACTOR**	Optional	Single	Factor that transform the order unit into the unit of measurement that is necessary for the foreign trade statistics. In this exemplarily example 3 m long pipes could be be ordered (order unit = each). The foreign trade statistics requires meter; therefore, the factor is 3. O base of this factor and the order unit also calculation factors for different sales units can be derived. 2005: New element	-	**dtNUMBER**	-	-	2005

Copyright © 2022 BME e.V. - BMEcat® Version 2005.2
Copyright © 2010-2021 BME e.V. - BMEcat® Version 2005.1
Copyright © 2005-2009 BME e.V. - BMEcat® Version 2005
Copyright © 1998–2004 Fraunhofer IAO, Stuttgart; Universität Essen BLI - BMEcat® Version 1.2

Elements

Designation	Element name	Mandatory/ Optional	Single/ Multiple	Explanation	Default value	Data type	Field length	Lang. specific	l.chg. in ver.
Country of origin	**COUNTRY_OF_ORIGIN**	Optional	Multiple	Contains the country of origin of the product. By using a subdivision code it is possible to reference a region. 2005fd: New element	-	**dtCOUNTRIES**	-	-	2005fd
Product dimensions	**PRODUCT_ DIMENSIONS**	Optional	Single	Information on the product dimension from the view of business logistics 	-	-	-	-	2005fd
Delivery time	**DELIVERY_TIMES**	Optional	Multiple	Information on the delivery time 	-	-	-	-	2005fd
Transport	**TRANSPORT**	Optional	Multiple	Information about the terms of transport 	-	-	-	-	2005fd
Means of transport	**MEANS_OF_ TRANSPORT - type**	Optional	Multiple	Means of transport with which the goods to be delivered are transported 	-	-	-	-	2005fd

Copyright © 2022 BME e.V. - BMEcat® Version 2005.2
Copyright © 2010-2021 BME e.V. - BMEcat® Version 2005.1
Copyright © 2005-2009 BME e.V. - BMEcat® Version 2005
Copyright © 1998–2004 Fraunhofer IAO, Stuttgart; Universität Essen BLI - BMEcat® Version 1.2

ARTICLE_TO_CATALOGGROUP_MAP in context T_NEW_CATALOG

(Assigning products to catalog groups)

This element is used to assign a product to a group of a catalog group system.

This element has been replaced by the new **PRODUCT_TO_CATALOGGROUP_MAP** in context T_NEW_CATALOG element. The element can still be used in the current BMEcat version, but it will be not available in the next version.

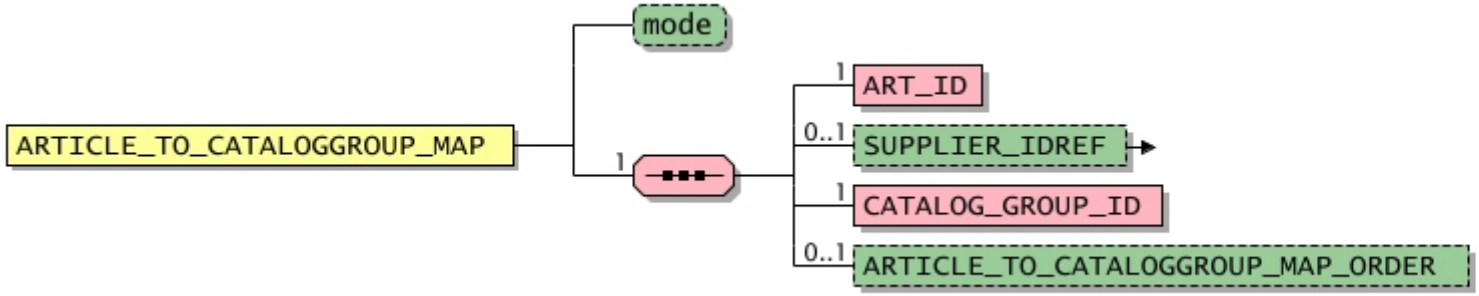

General					
Used in	Default value	Data type	Field length	Lang. specific	l.chg. in ver.
T_NEW_CATALOG	-	-	-	-	-

Attributes								
Designation	Attribute name	Mandatory/ optional	Explanation	Default value	Data type	Field length	Lang. specific	l.chg. in ver.
	mode	Optional	See also: **Permitted values for attribute "mode"**	new	**dtSTRING**	20	-	-

Permitted values for attribute "mode"			
Designation	Attribute value	Explanation	l.chg. in ver.
	new		-

Copyright © 2022 BME e.V. - BMEcat® Version 2005.2
Copyright © 2010-2021 BME e.V. - BMEcat® Version 2005.1
Copyright © 2005-2009 BME e.V. - BMEcat® Version 2005
Copyright © 1998–2004 Fraunhofer IAO, Stuttgart; Universität Essen BLI - BMEcat® Version 1.2

Elements									
Designation	Element name	Mandatory/ Optional	Single/ Multiple	Explanation	Default value	Data type	Field length	Lang. specific	l.chg. in ver.
	ART_ID	Mandatory	Single		-	**dtSTRING**	32	-	-
Reference to supplier	**SUPPLIER_IDREF - type**	Optional	Single	Reference to the supplier. It contains the unique identifier (**PARTY_ID**) of the respective party that is defined in the document (element **PARTY**).	-	**dtSTRING**	250	-	2005fd
Catalog group	**CATALOG_GROUP_ID**	Mandatory	Single	Reference to the catalog group. It must point to a **GROUP_ID** (see definition of catalog groups by the **CATALOG_STRUCTURE** element).	-	**dtSTRING**	50	-	-
	ARTICLE_TO_ CATALOGGROUP_ MAP_ORDER	Optional	Single		-	**dtINTEGER**	-	-	-

Copyright © 2022 BME e.V. - BMEcat® Version 2005.2
Copyright © 2010-2021 BME e.V. - BMEcat® Version 2005.1
Copyright © 2005-2009 BME e.V. - BMEcat® Version 2005
Copyright © 1998–2004 Fraunhofer IAO, Stuttgart; Universität Essen BLI - BMEcat® Version 1.2

T_UPDATE_PRODUCTS

(Transaction area 'product update')

This transaction updates product data. The transferred products are either added to/deleted from the target system or the complete product data record is replaced by a new one. A product identification (see attribute "**PRODUCT -->mode** in context T_UPDATE_PRICES" in **PRODUCT** in context T_UPDATE_PRICES (in context **T_UPDATE_PRODUCTS**)) indicates whether the product should be added, deleted or modified.

The product is always replaced completely, it is not possible to change individual data fields of a product.

In this transaction, only the transfer of product data, but not of classification systemsis possible.

The transferred **CATALOG_ID** of the relevant supplier (**SUPPLIER_NAME**) and the **CATALOG_VERSION** to which it belongs must already be present in the target system. The attribute "**T_UPDATE_PRODUCTS -->prev_version**" must be set to 0 with the first transaction type after **T_NEW_CATALOG** (**T_UPDATE_PRODUCTS**, **T_UPDATE_PRICES**). Eventually, it is increased by 1 with each transaction of this sort.. See also Example (**Combination of different transactions**)".

2005fd: The element was revised and the following sub-elements were added: **PARTIES**, **FORMULAS**, **MODULES**, **AREAS**, **PRODUCT** in context T_UPDATE_PRICES, **PRODUCT_TO_CATALOGGROUP_MAP** in context T_UPDATE_PRODUCTS
2005: The sub-elements **PARTIES** and **AREAS** were moved to **HEADER**. The **MODULES** element, which had been added in BMEcat 2005 final draft, was removed again.

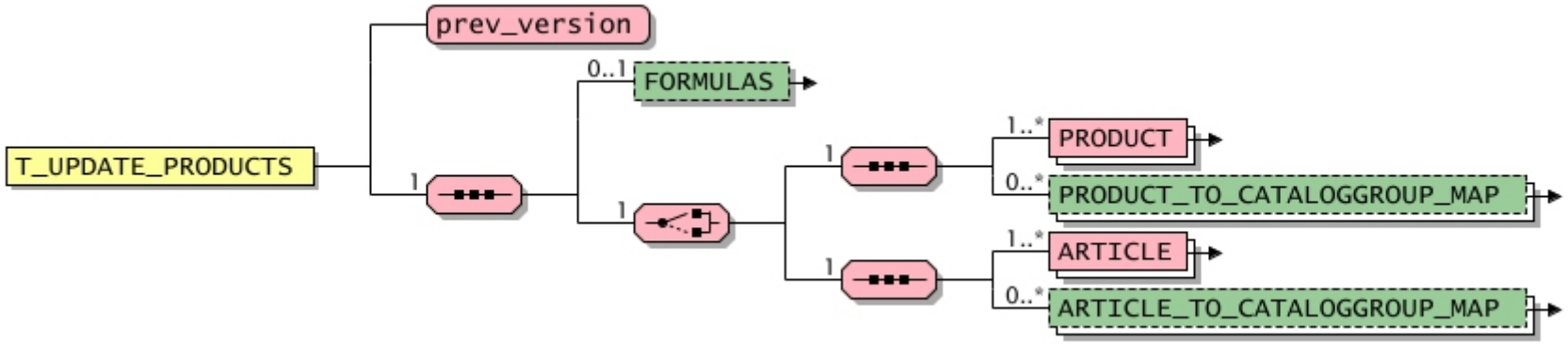

General					
Used in	Default value	Data type	Field length	Lang. specific	l.chg. in ver.
BMECAT	-	-	-	-	2005

Copyright © 2022 BME e.V. - BMEcat® Version 2005.2
Copyright © 2010-2021 BME e.V. - BMEcat® Version 2005.1
Copyright © 2005-2009 BME e.V. - BMEcat® Version 2005
Copyright © 1998–2004 Fraunhofer IAO, Stuttgart; Universität Essen BLI - BMEcat® Version 1.2

Attributes

Designation	Attribute name	Mandatory/ optional	Explanation	Default value	Data type	Field length	Lang. specific	l.chg. in ver.
No of previous updates	prev_version	Mandatory	This attribute contains the number of previous updates or the number of the transferred updates (not the last version number). Counting begins at 0 after each **T_NEW_CATALOG** within the same version. See also Example (**Combination of different transactions**).	-	**dtINTEGER**	-	-	1.2_fd

Elements

Designation	Element name	Mandatory/ Optional	Single/ Multiple	Explanation	Default value	Data type	Field length	Lang. specific	l.chg. in ver.
Dictionary of formulas	**FORMULAS**	Optional	Single	List of formulas that are specified in the document header	-	-	-	-	2005fd
Product	**PRODUCT** in context T_UPDATE_PRODUCTS **- mode**	Mandatory	Multiple	Information about a product	-	-	-	-	2005
Mapping to catalog group	**PRODUCT_TO_ CATALOGGROUP_ MAP** in context T_UPDATE_PRODUCTS **- mode**	Optional	Multiple	Mapping of the product to a group of a catalog group system	-	-	-	-	2005fd
Product	**ARTICLE** in context T_UPDATE_PRODUCTS **- mode**	Mandatory	Multiple	Information about a product This element has been replaced by the **PRODUCT** in context T_UPDATE_PRODUCTS element. It still may be used in this BMEcat version, though it will become obsolete in the next version.	-	-	-	-	-
Assigning products to catalog groups	**ARTICLE_TO_ CATALOGGROUP_ MAP**in context T_NEW_CATALOG **- mode**	Optional	Multiple	This element is used to assign a product to a group of a catalog group system. This element has been replaced by the new **PRODUCT_TO_CATALOGGROUP_MAP** in context T_NEW_CATALOG element. The element can still be used in the current BMEcat version, but it will be not available in the next version.	-	-	-	-	-

Copyright © 2022 BME e.V. - BMEcat® Version 2005.2
Copyright © 2010-2021 BME e.V. - BMEcat® Version 2005.1
Copyright © 2005-2009 BME e.V. - BMEcat® Version 2005
Copyright © 1998–2004 Fraunhofer IAO, Stuttgart; Universität Essen BLI - BMEcat® Version 1.2

PRODUCT in context T_UPDATE_PRODUCTS

(Product)

This element contains information about a product.

2005fd: This new element replaces with a modified semantics the former **ARTICLE** in context T_UPDATE_PRODUCTSelement; it has been extended by the following sub-elements: **SUPPLIER_IDREF**, **PRODUCT_CONTACTS**, **PRODUCT_IPP_DETAILS**, **PRODUCT_LOGISTIC_DETAILS**, **PRODUCT_CONFIG_DETAILS**, **PRODUCT_MODULES**; the sub-element **SUPPLIER_AID** has been renamed to **SUPPLIER_PID**; the sub-element **ARTICLE_DETAILS** has been renamed to **PRODUCT_DETAILS**; the sub-element **ARTICLE_FEATURES** has been renamed to **PRODUCT_FEATURES**; the sub-element **ARTICLE_ORDER_DETAILS** has been renamed to **PRODUCT_ORDER_DETAILS**; the sub-element **ARTICLE_PRICE_DETAILS** has been renamed to **PRODUCT_PRICE_DETAILS**; the sub-element **ARTICLE_REFERENCE** has been renamed to **PRODUCT_REFERENCE**

2005: The sub-element **PRODUCT_MODULES**which had been added in BMEcat 2005 final draft, was removed again.

Copyright © 2022 BME e.V. - BMEcat® Version 2005.2
Copyright © 2010-2021 BME e.V. - BMEcat® Version 2005.1
Copyright © 2005-2009 BME e.V. - BMEcat® Version 2005
Copyright © 1998–2004 Fraunhofer IAO, Stuttgart; Universität Essen BLI - BMEcat® Version 1.2

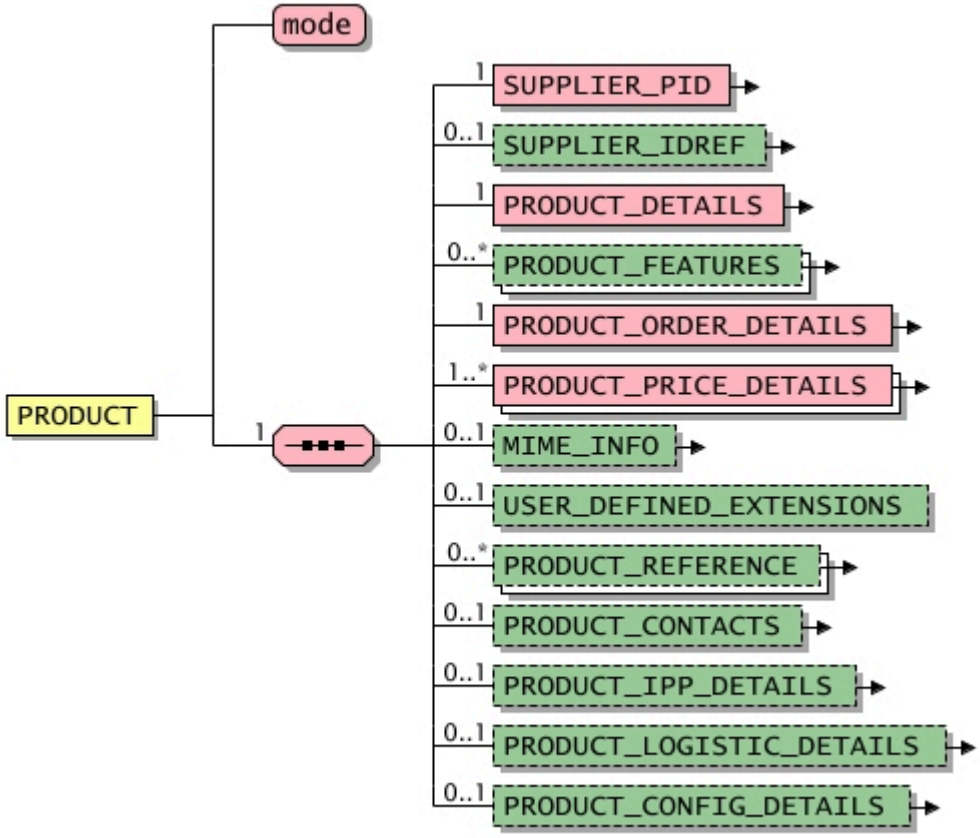

General

Used in	Default value	Data type	Field length	Lang. specific	l.chg. in ver.
T_UPDATE_PRODUCTS	-	-	-	-	2005

Attributes

Designation	Attribute name	Mandatory/ optional	Explanation	Default value	Data type	Field length	Lang. specific	l.chg. in ver.
Transfer mode	mode	Mandatory	Determines how the transferred data should be processed by the target system (insert, update, delete); see also example (**combination of different transactions**)"	-	**dtSTRING**	20	-	-

Copyright © 2022 BME e.V. - BMEcat® Version 2005.2
Copyright © 2010-2021 BME e.V. - BMEcat® Version 2005.1
Copyright © 2005-2009 BME e.V. - BMEcat® Version 2005
Copyright © 1998–2004 Fraunhofer IAO, Stuttgart; Universität Essen BLI - BMEcat® Version 1.2

Attributes

Designation	Attribute name	Mandatory/ optional	Explanation	Default value	Data type	Field length	Lang. specific	l.chg. in ver.
			If the transfer mode for the **T_UPDATE_PRODUCTS**transaction is set in a not allowed way, the following procedure is recommended wird bei einer unzulässigen Angabe des Übertragungsmodus folgende Vorgehensweise empfohlen: **new** — Product already exists in the target system — Error, do not import product, product remains unchanged in the target system **update** — Product does not exist in the target system — Warning **delete** — Product does not exist in the target system — Warning See also: **Permitted values for attribute "mode"**					

Permitted values for attribute "mode"

Designation	Attribute value	Explanation	l.chg. in ver.
Delete	delete	The product will be deleted in the target system. All other data transfered with the product will be ignored.	-
New	new	The product does not exist in the target system, and will be inserted.	-
Update	update	The product already exists in the target system. The data fields will be completely replaced. Updating single data fields is not possible.	-

Elements

Designation	Element name	Mandatory/ Optional	Single/ Multiple	Explanation	Default value	Data type	Field length	Lang. specific	l.chg. in ver.
Supplier's product ID	**SUPPLIER_PID** **- type**	Mandatory	Single	This element contains the product number issued by the supplier. It is determining for ordering the product; it identifies the product in the supplier catalog. In multi-supplier catalogs, however, only the combination of **SUPPLIER_PID** and **SUPPLIER_IDREF** identifies a product. 	-	**dtSTRING**	32	-	2005
Reference to supplier	**SUPPLIER_IDREF** **- type**	Optional	Single	Reference to the supplier. It contains the unique identifier (**PARTY_ID**) of the respective party that is defined in the document (element **PARTY**). 	-	**dtSTRING**	250	-	2005fd
Product details	**PRODUCT_DETAILS**	Mandatory	Single	Identification and description of the product 	-	-	-	-	2005fd
Product features	**PRODUCT_FEATURES**	Optional	Multiple	Description of the product by features and/or classification of the product	-	-	-	-	2005

Copyright © 2022 BME e.V. - BMEcat® Version 2005.2
Copyright © 2010-2021 BME e.V. - BMEcat® Version 2005.1
Copyright © 2005-2009 BME e.V. - BMEcat® Version 2005
Copyright © 1998–2004 Fraunhofer IAO, Stuttgart; Universität Essen BLI - BMEcat® Version 1.2

Elements

Designation	Element name	Mandatory/ Optional	Single/ Multiple	Explanation	Default value	Data type	Field length	Lang. specific	I.chg. in ver.
				*					
Order details	**PRODUCT_ORDER_ DETAILS**	Mandatory	Single	Order information and packaging policies of the product *	-	-	-	-	2005fd
Price details	**PRODUCT_PRICE_ DETAILS**	Mandatory	Multiple	Price information for the product *	-	-	-	-	2005fd
Additional multimedia information	**MIME_INFO**	Optional	Single	Information about multimedia files	-	-	-	-	-
User-defined extensions	**USER_DEFINED_ EXTENSIONS**	Optional	Single	This element can be used for transferring information in user-defined non-BMEcat-elements; hence it is possible to extend the pre-defined set of BMEcat-elements by user-defined ones. The usage of those elements results in BMEcat catalog documents, which can only be exchanged between the companies that have agreed on these extensions. The structure of these elements can be very complex, though it must be valid XML. ! **USER_DEFINED_EXTENSIONS** are defined exclusively as optional fields. Therefore, it is expressly pointed out that if user-defined extensions are used they must be compatible with the target systems and should be clarified on a case-to-case basis. The names of the elements must be clearly distinguishable from the names of other elements contained in the BMEcat standard. For this reason, all element must start with the string "UDX" (Example: <UDX.supplier.elementname>). The definition of user-defined extensions takes place by additional XML DTD or XML Schema files. **Example: usage of non-BMEcat elements (XML)**	-	udxPRODUCT	-	-	-

```
<PRODUCT mode="new">
    <SUPPLIER_PID>100325235</SUPPLIER_PID>
    <PRODUCT_DETAILS>
         ...
    </PRODUCT_DETAILS>
    <ORDER_DETAILS>
         ...
    </ORDER_DETAILS>
    <USER_DEFINED_EXTENSIONS>
        <UDX.MYORG.PATENTNO>35120561614261</UDX.MYORG.PATENTNO>
```

Copyright © 2022 BME e.V. - BMEcat® Version 2005.2
Copyright © 2010-2021 BME e.V. - BMEcat® Version 2005.1
Copyright © 2005-2009 BME e.V. - BMEcat® Version 2005
Copyright © 1998–2004 Fraunhofer IAO, Stuttgart; Universität Essen BLI - BMEcat® Version 1.2

Elements

Designation	Element name	Mandatory/ Optional	Single/ Multiple	Explanation	Default value	Data type	Field length	Lang. specific	l.chg. in ver.
				<UDX.MYORG.PATENTDATE>2004-11-14</UDX.MYORG.PATENTDATE> </USER_DEFINED_EXTENSIONS> </PRODUCT>					
Product reference	**PRODUCT_REFERENCE** **- type** **- quantity**	Optional	Multiple	Reference to another product	-	-	-	-	2005
Product contacts	**PRODUCT_CONTACTS**	Optional	Single	List of contact person for the product	-	-	-	-	2005
IPP details	**PRODUCT_IPP_ DETAILS**	Optional	Single	Product-specific information on IPP applications	-	-	-	-	2005fd
Logistics information	**PRODUCT_LOGISTIC_ DETAILS**	Optional	Single	Logistic information on the product	-	-	-	-	2005
Product configuration information	**PRODUCT_CONFIG_ DETAILS**	Optional	Single	Configuration information on the product	-	-	-	-	2005fd

Copyright © 2022 BME e.V. - BMEcat® Version 2005.2
Copyright © 2010-2021 BME e.V. - BMEcat® Version 2005.1
Copyright © 2005-2009 BME e.V. - BMEcat® Version 2005
Copyright © 1998–2004 Fraunhofer IAO, Stuttgart; Universität Essen BLI - BMEcat® Version 1.2

PRODUCT_TO_CATALOGGROUP_MAP in context T_UPDATE_PRODUCTS

(Mapping to catalog group)

Once the catalog structure (**CATALOG_GROUP_SYSTEM**) has been built up, products can be attached to this tree. Since products often cannot clearly be assigned (mapped) to a single group, it is possible to map a product to several different groups. In this case, however, a **PRODUCT_TO_CATALOGGROUP_MAP** in context T_UPDATE_PRODUCTS element must be entered for each mapping. The order of the **PRODUCT_TO_CATALOGGROUP_MAP** in context T_UPDATE_PRODUCTS elements is not relevant.

2005fd: This new element replace the **ARTICLE_TO_CATALOGGROUP_MAP**in context T_NEW_CATALOG element. Contrary to BMEcat 1.2, products can now be mapped to any catalog group. The mapping is no longer restricted to groups on the lowest level, thus to groups (**CATALOG_STRUCTURE**) with attribute "**type**" having the value "**leaf**".

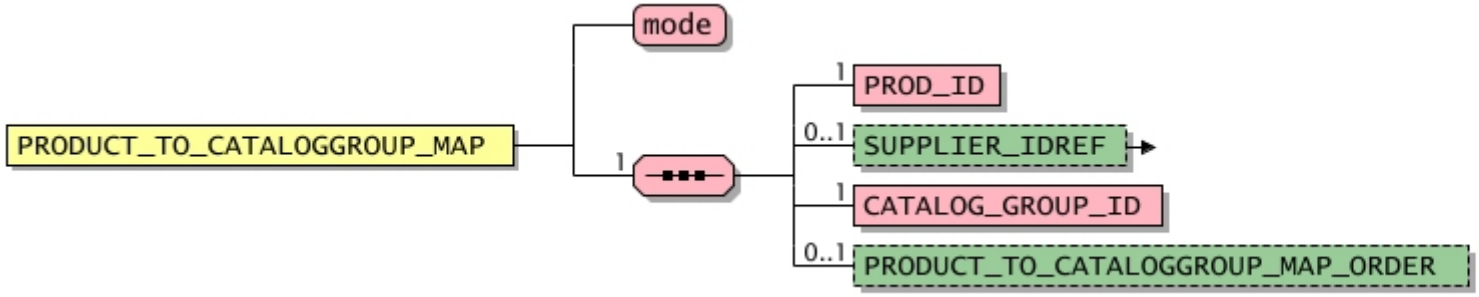

General					
Used in	Default value	Data type	Field length	Lang. specific	l.chg. in ver.
T_UPDATE_PRODUCTS	-	-	-	-	2005fd

Attributes								
Designation	Attribute name	Mandatory/ optional	Explanation	Default value	Data type	Field length	Lang. specific	l.chg. in ver.
Mode	mode	Mandatory	Indicates whether the element is describing a new assignment or the deletion of an existing assignment See also: **Permitted values for attribute "mode"**	-	**dtSTRING**	20	-	-

Permitted values for attribute "mode"			
Designation	Attribute value	Explanation	l.chg. in ver.
Delete	delete	the existing assignment is deleted	-

Copyright © 2022 BME e.V. - BMEcat® Version 2005.2
Copyright © 2010-2021 BME e.V. - BMEcat® Version 2005.1
Copyright © 2005-2009 BME e.V. - BMEcat® Version 2005
Copyright © 1998–2004 Fraunhofer IAO, Stuttgart; Universität Essen BLI - BMEcat® Version 1.2

Permitted values for attribute "mode"			
Designation	Attribute value	Explanation	l.chg. in ver.
New	new	Assignment of the product to a catalog group is redefined	-

Elements									
Designation	Element name	Mandatory/ Optional	Single/ Multiple	Explanation	Default value	Data type	Field length	Lang. specific	l.chg. in ver.
Product ID	**PROD_ID**	Mandatory	Single	Number of the product which belongs to the group	-	**dtSTRING**	32	-	-
Reference to supplier	**SUPPLIER_IDREF - type**	Optional	Single	Reference to the supplier. It contains the unique identifier (**PARTY_ID**) of the respective party that is defined in the document (element **PARTY**).	-	**dtSTRING**	250	-	2005fd
Catalog group	**CATALOG_GROUP_ID**	Mandatory	Single	Reference to the catalog group. It must point to a **GROUP_ID** (see definition of catalog groups by the **CATALOG_STRUCTURE** element).	-	**dtSTRING**	50	-	-
Product order	**PRODUCT_TO_ CATALOGGROUP_ MAP_ORDER**	Optional	Single	Order in which the products are represented within a catalog group (**CATALOG_ STRUCTURE**) in the target system. When the products are listed they are listed in ascending order (the first product corresponds to the lowest number). If products from several groups are represented, the products should be sorted according to **PRODUCT_ORDER** rather than to **PRODUCT_TO_CATALOGGROUP_ MAP_ORDER**.	-	**dtINTEGER**	-	-	1.2

Copyright © 2022 BME e.V. - BMEcat® Version 2005.2
Copyright © 2010-2021 BME e.V. - BMEcat® Version 2005.1
Copyright © 2005-2009 BME e.V. - BMEcat® Version 2005
Copyright © 1998–2004 Fraunhofer IAO, Stuttgart; Universität Essen BLI - BMEcat® Version 1.2

ARTICLE in context T_UPDATE_PRODUCTS

(Product)

Information about a product

This element has been replaced by the **PRODUCT** in context T_UPDATE_PRODUCTS element. It still may be used in this BMEcat version, though it will become obsolete in the next version.

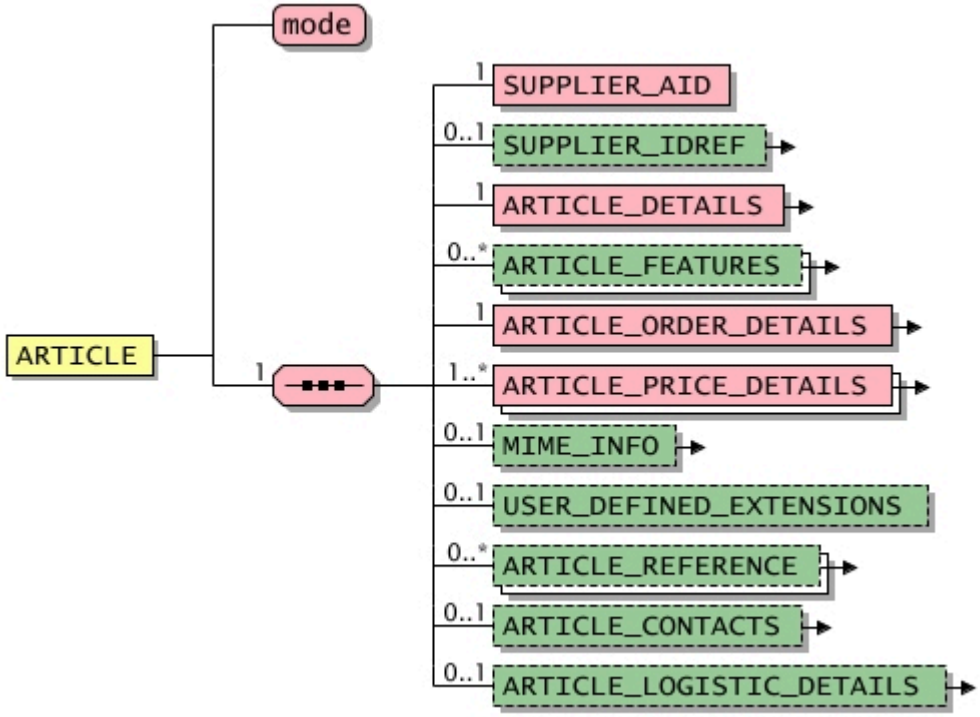

General					
Used in	Default value	Data type	Field length	Lang. specific	I.chg. in ver.
T_UPDATE_PRODUCTS	-	-	-	-	-

Copyright © 2022 BME e.V. - BMEcat® Version 2005.2
Copyright © 2010-2021 BME e.V. - BMEcat® Version 2005.1
Copyright © 2005-2009 BME e.V. - BMEcat® Version 2005
Copyright © 1998–2004 Fraunhofer IAO, Stuttgart; Universität Essen BLI - BMEcat® Version 1.2

Attributes								
Designation	Attribute name	Mandatory/ optional	Explanation	Default value	Data type	Field length	Lang. specific	l.chg. in ver.
	mode	Mandatory	See also: **Permitted values for attribute "mode"**	-	**dtSTRING**	20	-	-

Permitted values for attribute "mode"			
Designation	Attribute value	Explanation	l.chg. in ver.
	delete		-
	new		-
	update		-

Elements									
Designation	Element name	Mandatory/ Optional	Single/ Multiple	Explanation	Default value	Data type	Field length	Lang. specific	l.chg. in ver.
	SUPPLIER_AID	Mandatory	Single		-	**dtSTRING**	32	-	-
Reference to supplier	**SUPPLIER_IDREF - type**	Optional	Single	Reference to the supplier. It contains the unique identifier (**PARTY_ID**) of the respective party that is defined in the document (element **PARTY**).	-	**dtSTRING**	250	-	2005fd
	ARTICLE_DETAILS	Mandatory	Single		-	-	-	-	-
	ARTICLE_FEATURES	Optional	Multiple		-	-	-	-	-
	ARTICLE_ORDER_ DETAILS	Mandatory	Single		-	-	-	-	-
	ARTICLE_PRICE_ DETAILS	Mandatory	Multiple		-	-	-	-	-
Additional multimedia information	**MIME_INFO**	Optional	Single	Information about multimedia files	-	-	-	-	-
User-defined extensions	**USER_DEFINED_ EXTENSIONS**	Optional	Single	This element can be used for transferring information in user-defined non-BMEcat-elements; hence it is possible to extend the pre-defined set of BMEcat-elements by user-defined ones. The usage of those elements results in BMEcat catalog documents, which can only be exchanged between the companies that have agreed on these extensions. The structure of these elements can be very complex, though it must be valid XML.	-	**udxPRODUCT**	-	-	-

Copyright © 2022 BME e.V. - BMEcat® Version 2005.2
Copyright © 2010-2021 BME e.V. - BMEcat® Version 2005.1
Copyright © 2005-2009 BME e.V. - BMEcat® Version 2005
Copyright © 1998–2004 Fraunhofer IAO, Stuttgart; Universität Essen BLI - BMEcat® Version 1.2

Elements

Designation	Element name	Mandatory/ Optional	Single/ Multiple	Explanation	Default value	Data type	Field length	Lang. specific	l.chg. in ver.
				USER_DEFINED_EXTENSIONS are defined exclusively as optional fields. Therefore, it is expressly pointed out that if user-defined extensions are used they must be compatible with the target systems and should be clarified on a case-to-case basis. The names of the elements must be clearly distinguishable from the names of other elements contained in the BMEcat standard. For this reason, all element must start with the string "UDX" (Example: <UDX.supplier.elementname>). The definition of user-defined extensions takes place by additional XML DTD or XML Schema files. **Example: usage of non-BMEcat elements (XML)** <PRODUCT mode="new"> <SUPPLIER_PID>100325235</SUPPLIER_PID> <PRODUCT_DETAILS> ... </PRODUCT_DETAILS> <ORDER_DETAILS> ... </ORDER_DETAILS> <USER_DEFINED_EXTENSIONS> <UDX.MYORG.PATENTNO>35120561614261</UDX.MYORG.PATENTNO> <UDX.MYORG.PATENTDATE>2004-11-14</UDX.MYORG.PATENTDATE> </USER_DEFINED_EXTENSIONS> </PRODUCT>					
	ARTICLE_REFERENCE **- type** **- quantity**	Optional	Multiple		-	-	-	-	-
	ARTICLE_CONTACTS	Optional	Single		-	-	-	-	-
	ARTICLE_LOGISTIC_ DETAILS	Optional	Single		-	-	-	-	-

Copyright © 2022 BME e.V. - BMEcat® Version 2005.2
Copyright © 2010-2021 BME e.V. - BMEcat® Version 2005.1
Copyright © 2005-2009 BME e.V. - BMEcat® Version 2005
Copyright © 1998–2004 Fraunhofer IAO, Stuttgart; Universität Essen BLI - BMEcat® Version 1.2

ARTICLE_TO_CATALOGGROUP_MAP in context T_NEW_CATALOG

(Assigning products to catalog groups)

This element is used to assign a product to a group of a catalog group system.

This element has been replaced by the new **PRODUCT_TO_CATALOGGROUP_MAP** in context T_NEW_CATALOG element. The element can still be used in the current BMEcat version, but it will be not available in the next version.

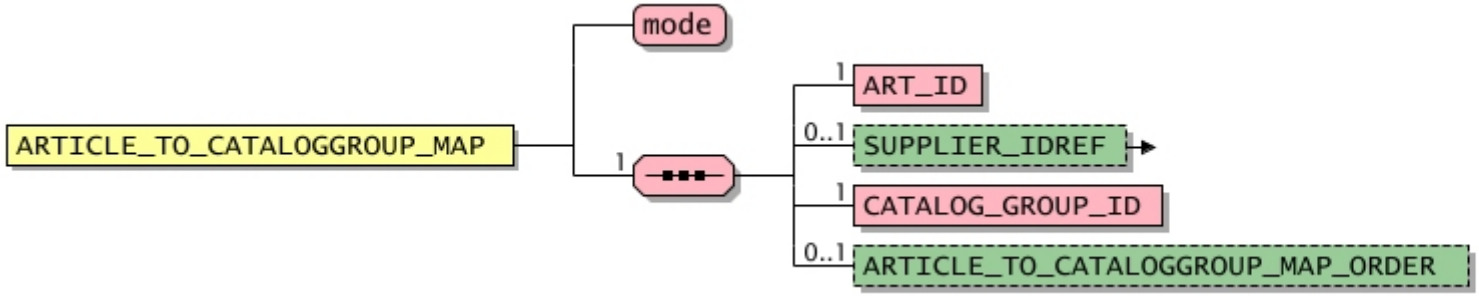

General					
Used in	Default value	Data type	Field length	Lang. specific	l.chg. in ver.
T_UPDATE_PRODUCTS	-	-	-	-	-

Attributes								
Designation	Attribute name	Mandatory/ optional	Explanation	Default value	Data type	Field length	Lang. specific	l.chg. in ver.
	mode	Mandatory	See also: **Permitted values for attribute "mode"**	-	**dtSTRING**	20	-	-

Permitted values for attribute "mode"			
Designation	Attribute value	Explanation	l.chg. in ver.
	delete		-
	new		-

Copyright © 2022 BME e.V. - BMEcat® Version 2005.2
Copyright © 2010-2021 BME e.V. - BMEcat® Version 2005.1
Copyright © 2005-2009 BME e.V. - BMEcat® Version 2005
Copyright © 1998–2004 Fraunhofer IAO, Stuttgart; Universität Essen BLI - BMEcat® Version 1.2

Elements									
Designation	Element name	Mandatory/ Optional	Single/ Multiple	Explanation	Default value	Data type	Field length	Lang. specific	l.chg. in ver.
	ART_ID	Mandatory	Single		-	**dtSTRING**	32	-	-
Reference to supplier	**SUPPLIER_IDREF - type**	Optional	Single	Reference to the supplier. It contains the unique identifier (**PARTY_ID**) of the respective party that is defined in the document (element **PARTY**).	-	**dtSTRING**	250	-	2005fd
Catalog group	**CATALOG_GROUP_ID**	Mandatory	Single	Reference to the catalog group. It must point to a **GROUP_ID** (see definition of catalog groups by the **CATALOG_STRUCTURE** element).	-	**dtSTRING**	50	-	-
	ARTICLE_TO_ CATALOGGROUP_ MAP_ORDER	Optional	Single		-	**dtINTEGER**	-	-	-

Copyright © 2022 BME e.V. - BMEcat® Version 2005.2
Copyright © 2010-2021 BME e.V. - BMEcat® Version 2005.1
Copyright © 2005-2009 BME e.V. - BMEcat® Version 2005
Copyright © 1998–2004 Fraunhofer IAO, Stuttgart; Universität Essen BLI - BMEcat® Version 1.2

T_UPDATE_PRICES

(Transaction area 'price update')

This transaction transfers new price information on products to the target system. All prices on the corresponding products already in the target system are deleted and replaced with the new prices. Essentially, the transaction consists of the **SUPPLIER_PID** and **PRODUCT_PRICE_DETAILS** elements.

2005fd: The element was revised and the following sub-elements were added: **PARTIES**, **FORMULAS**, **AREAS**, **PRODUCT** in context T_UPDATE_PRODUCTS
2005: The sub-elements **PARTIES** and **AREAS** were moved to **HEADER**.

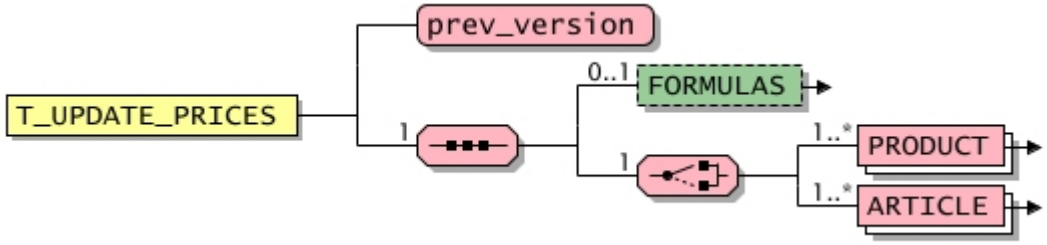

General					
Used in	Default value	Data type	Field length	Lang. specific	I.chg. in ver.
BMECAT	-	-	-	-	2005

Attributes								
Designation	Attribute name	Mandatory/ optional	Explanation	Default value	Data type	Field length	Lang. specific	I.chg. in ver.
No of previous updates	prev_version	Mandatory	This attribute contains the number of previous updates or the number of the transferred updates (not the last version number). Counting begins at 0 after each **T_NEW_CATALOG** within the same version. See also Example (**Combination of different transactions**).	-	**dtINTEGER**	-	-	1.2_fd

Elements									
Designation	Element name	Mandatory/ Optional	Single/ Multiple	Explanation	Default value	Data type	Field length	Lang. specific	I.chg. in ver.
Dictionary of formulas	**FORMULAS**	Optional	Single	List of formulas that are specified in the document header	-	-	-	-	2005fd

Copyright © 2022 BME e.V. - BMEcat® Version 2005.2
Copyright © 2010-2021 BME e.V. - BMEcat® Version 2005.1
Copyright © 2005-2009 BME e.V. - BMEcat® Version 2005
Copyright © 1998–2004 Fraunhofer IAO, Stuttgart; Universität Essen BLI - BMEcat® Version 1.2

Elements									
Designation	Element name	Mandatory/ Optional	Single/ Multiple	Explanation	Default value	Data type	Field length	Lang. specific	I.chg. in ver.
Product	**PRODUCT** in context T_UPDATE_PRICES **- mode**	Mandatory	Multiple	Information about a product	-	-	-	-	2005fd
Product	**ARTICLE** in context T_UPDATE_PRICES **- mode**	Mandatory	Multiple	Information about a product This element has been replaced by the **PRODUCT** in context T_UPDATE_PRICES element. It still may be used in this BMEcat version, though it will become obsolete in the next version.	-	-	-	-	-

Copyright © 2022 BME e.V. - BMEcat® Version 2005.2
Copyright © 2010-2021 BME e.V. - BMEcat® Version 2005.1
Copyright © 2005-2009 BME e.V. - BMEcat® Version 2005
Copyright © 1998–2004 Fraunhofer IAO, Stuttgart; Universität Essen BLI - BMEcat® Version 1.2

PRODUCT in context T_UPDATE_PRICES

(Product)

This element contains information about a product

2005fd: This new element replaces with a modified semantics the former **ARTICLE** in context T_UPDATE_PRICESelement; it has been extended by the **SUPPLIER_IDREF** sub-element; the sub-element **SUPPLIER_AID** has been renamed to **SUPPLIER_PID**; the sub-element **ARTICLE_PRICE_DETAILS** has been renamed to **PRODUCT_PRICE_DETAILS**

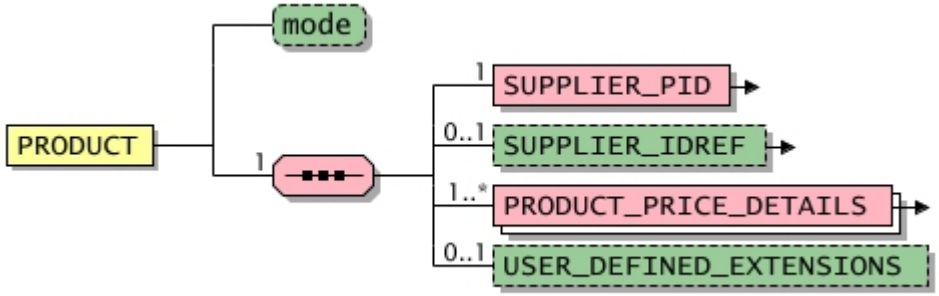

General

Used in	Default value	Data type	Field length	Lang. specific	l.chg. in ver.
T_UPDATE_PRICES	-	-	-	-	2005fd

Attributes

Designation	Attribute name	Mandatory/ optional	Explanation	Default value	Data type	Field length	Lang. specific	l.chg. in ver.
Transfer mode	mode	Optional	Determines how the transferred data should be processed by the target system (insert, update, delete); In the transaction **T_UPDATE_PRICES**, determing the transfer mode is not necessary, otherwise it is always 'update'. See also example (**combination of different transactions**)" If the transfer mode for the **T_UPDATE_PRICES** transaction is set in a not allowed way, the following procedure is recommended:	update	**dtSTRING**	20	-	-

Mode	Error	Recommendation
new	Wrong mode, product already exists in the target system	Error, do not import price information, product remains unchanged in the target system

Copyright © 2022 BME e.V. - BMEcat® Version 2005.2
Copyright © 2010-2021 BME e.V. - BMEcat® Version 2005.1
Copyright © 2005-2009 BME e.V. - BMEcat® Version 2005
Copyright © 1998–2004 Fraunhofer IAO, Stuttgart; Universität Essen BLI - BMEcat® Version 1.2

Attributes

Designation	Attribute name	Mandatory/ optional	Explanation	Default value	Data type	Field length	Lang. specific	l.chg. in ver.
			<table><tr><td>new</td><td>Wrong mode, product does not exist in the target system</td><td>Error</td></tr><tr><td>delete</td><td>Wrong mode</td><td>Error</td></tr><tr><td>update</td><td>Product does not exist in the target system</td><td>Error</td></tr></table> Therefore, if the **T_NEW_CATALOG** transaction uses the transfer mode (**PRODUCT -->mode** in context T_NEW_CATALOG) 'delete' or 'update', the mode is wrong, and the product should not be imported at all. See also: **Permitted values for attribute "mode"**					

Permitted values for attribute "mode"

Designation	Attribute value	Explanation	l.chg. in ver.
Update	**update**	The product already exists in the target system. The data fields will be completely replaced. Updating single data fields is not possible.	-

Elements

Designation	Element name	Mandatory/ Optional	Single/ Multiple	Explanation	Default value	Data type	Field length	Lang. specific	l.chg. in ver.
Supplier's product ID	**SUPPLIER_PID - type**	Mandatory	Single	This element contains the product number issued by the supplier. It is determining for ordering the product; it identifies the product in the supplier catalog. In multi-supplier catalogs, however, only the combination of **SUPPLIER_PID** and **SUPPLIER_IDREF** identifies a product.	-	**dtSTRING**	32	-	2005
Reference to supplier	**SUPPLIER_IDREF - type**	Optional	Single	Reference to the supplier. It contains the unique identifier (**PARTY_ID**) of the respective party that is defined in the document (element **PARTY**).	-	**dtSTRING**	250	-	2005fd
Price details	**PRODUCT_PRICE_ DETAILS**	Mandatory	Multiple	Price information for the product	-	-	-	-	2005fd
User-defined extensions	**USER_DEFINED_ EXTENSIONS**	Optional	Single	This element can be used for transferring information in user-defined non-BMEcat-elements; hence it is possible to extend the pre-defined set of BMEcat-elements by user-defined ones. The usage of those elements results in BMEcat catalog documents, which can only be exchanged between the companies that have agreed on these	-	**udxPRODUCT**	-	-	-

Copyright © 2022 BME e.V. - BMEcat® Version 2005.2
Copyright © 2010-2021 BME e.V. - BMEcat® Version 2005.1
Copyright © 2005-2009 BME e.V. - BMEcat® Version 2005
Copyright © 1998–2004 Fraunhofer IAO, Stuttgart; Universität Essen BLI - BMEcat® Version 1.2

Elements

Designation	Element name	Mandatory/ Optional	Single/ Multiple	Explanation	Default value	Data type	Field length	Lang. specific	I.chg. in ver.

				extensions. The structure of these elements can be very complex, though it must be valid XML.
				
				USER_DEFINED_EXTENSIONS are defined exclusively as optional fields. Therefore, it is expressly pointed out that if user-defined extensions are used they must be compatible with the target systems and should be clarified on a case-to-case basis.
				The names of the elements must be clearly distinguishable from the names of other elements contained in the BMEcat standard. For this reason, all element must start with the string "UDX" (Example: <UDX.supplier.elementname>).
				The definition of user-defined extensions takes place by additional XML DTD or XML Schema files.
				Example: usage of non-BMEcat elements (XML)
				`<PRODUCT mode="new">`
				`<SUPPLIER_PID>100325235</SUPPLIER_PID>`
				`<PRODUCT_DETAILS>`
				`...`
				`</PRODUCT_DETAILS>`
				`<ORDER_DETAILS>`
				`...`
				`</ORDER_DETAILS>`
				`<USER_DEFINED_EXTENSIONS>`
				`<UDX.MYORG.PATENTNO>35120561614261</UDX.MYORG.PATENTNO>`
				`<UDX.MYORG.PATENTDATE>2004-11-14</UDX.MYORG.PATENTDATE>`
				`</USER_DEFINED_EXTENSIONS>`
				`</PRODUCT>`					

Copyright © 2022 BME e.V. - BMEcat® Version 2005.2
Copyright © 2010-2021 BME e.V. - BMEcat® Version 2005.1
Copyright © 2005-2009 BME e.V. - BMEcat® Version 2005
Copyright © 1998–2004 Fraunhofer IAO, Stuttgart; Universität Essen BLI - BMEcat® Version 1.2

ARTICLE in context T_UPDATE_PRICES

(Product)

Information about a product

This element has been replaced by the **PRODUCT** in context T_UPDATE_PRICES element. It still may be used in this BMEcat version, though it will become obsolete in the next version.

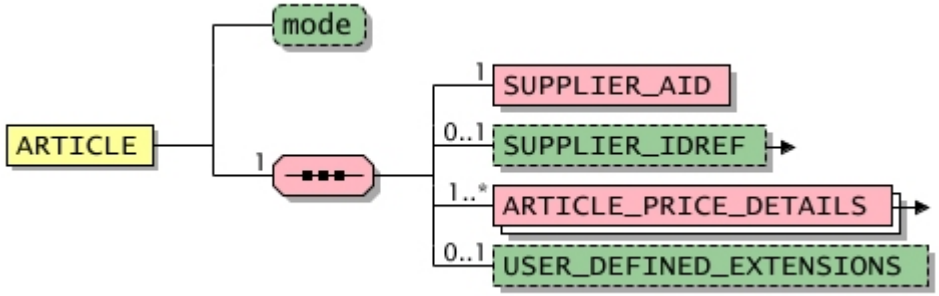

General					
Used in	Default value	Data type	Field length	Lang. specific	l.chg. in ver.
T_UPDATE_PRICES	-	-	-	-	-

Attributes								
Designation	Attribute name	Mandatory/ optional	Explanation	Default value	Data type	Field length	Lang. specific	l.chg. in ver.
	mode	Optional	See also: **Permitted values for attribute "mode"**	update	**dtSTRING**	20	-	-

Permitted values for attribute "mode"			
Designation	Attribute value	Explanation	l.chg. in ver.
	update		-

Copyright © 2022 BME e.V. - BMEcat® Version 2005.2
Copyright © 2010-2021 BME e.V. - BMEcat® Version 2005.1
Copyright © 2005-2009 BME e.V. - BMEcat® Version 2005
Copyright © 1998–2004 Fraunhofer IAO, Stuttgart; Universität Essen BLI - BMEcat® Version 1.2

Elements

Designation	Element name	Mandatory/ Optional	Single/ Multiple	Explanation	Default value	Data type	Field length	Lang. specific	l.chg. in ver.
	SUPPLIER_AID	Mandatory	Single		-	**dtSTRING**	32	-	-
Reference to supplier	**SUPPLIER_IDREF - type**	Optional	Single	Reference to the supplier. It contains the unique identifier (**PARTY_ID**) of the respective party that is defined in the document (element **PARTY**).	-	**dtSTRING**	250	-	2005fd
	ARTICLE_PRICE_ DETAILS	Mandatory	Multiple		-	-	-	-	-
User-defined extensions	**USER_DEFINED_ EXTENSIONS**	Optional	Single	This element can be used for transferring information in user-defined non-BMEcat-elements; hence it is possible to extend the pre-defined set of BMEcat-elements by user-defined ones. The usage of those elements results in BMEcat catalog documents, which can only be exchanged between the companies that have agreed on these extensions. The structure of these elements can be very complex, though it must be valid XML. **USER_DEFINED_EXTENSIONS** are defined exclusively as optional fields. Therefore, it is expressly pointed out that if user-defined extensions are used they must be compatible with the target systems and should be clarified on a case-to-case basis. The names of the elements must be clearly distinguishable from the names of other elements contained in the BMEcat standard. For this reason, all element must start with the string "UDX" (Example: <UDX.supplier.elementname>). The definition of user-defined extensions takes place by additional XML DTD or XML Schema files. **Example: usage of non-BMEcat elements (XML)**	-	**udxPRODUCT**	-	-	-

```
<PRODUCT mode="new">
    <SUPPLIER_PID>100325235</SUPPLIER_PID>
    <PRODUCT_DETAILS>
         ...
    </PRODUCT_DETAILS>
    <ORDER_DETAILS>
         ...
    </ORDER_DETAILS>
    <USER_DEFINED_EXTENSIONS>
        <UDX.MYORG.PATENTNO>35120561614261</UDX.MYORG.PATENTNO>
        <UDX.MYORG.PATENTDATE>2004-11-14</UDX.MYORG.PATENTDATE>
    </USER_DEFINED_EXTENSIONS>
</PRODUCT>
```

Copyright © 2022 BME e.V. - BMEcat® Version 2005.2
Copyright © 2010-2021 BME e.V. - BMEcat® Version 2005.1
Copyright © 2005-2009 BME e.V. - BMEcat® Version 2005
Copyright © 1998–2004 Fraunhofer IAO, Stuttgart; Universität Essen BLI - BMEcat® Version 1.2

Index

ACADEMIC_TITLE . . . 84
ACCOUNTING_INFO . . . 316
ADDRESS . . . 120
ADDRESS in context BUYER . . . 78
ADDRESS in context SUPPLIER . . . 108
ADDRESS_REMARKS . . . 81
AGREEMENT . . . 92
AGREEMENT_DESCR . . . 94
AGREEMENT_END_DATE . . . 94
AGREEMENT_ID . . . 93
AGREEMENT_IDREF . . . 319
AGREEMENT_LINE_ID . . . 93
AGREEMENT_LINE_IDREF . . . 319
AGREEMENT_REF . . . 319
AGREEMENT_START_DATE . . . 93
ALLOWED_VALUE . . . 147
ALLOWED_VALUES . . . 146
ALLOWED_VALUE_DESCR . . . 148
ALLOWED_VALUE_ID . . . 147
ALLOWED_VALUE_IDREF . . . 228
ALLOWED_VALUE_NAME . . . 147
ALLOWED_VALUE_SHORTNAME . . . 148
ALLOWED_VALUE_SOURCE . . . 152
ALLOWED_VALUE_SYNONYMS . . . 151
ALLOWED_VALUE_VERSION . . . 149
AREA . . . 125
AREAS . . . 124
AREA_DESCR . . . 125
AREA_ID . . . 125
AREA_IDREF . . . 58
AREA_LEGAL_INFO . . . 103
AREA_NAME . . . 125
AREA_REFS . . . 58
ARTICLE in context T_NEW_CATALOG . . . 393
ARTICLE in context T_UPDATE_PRICES . . . 445
ARTICLE in context T_UPDATE_PRODUCTS . . . 435
ARTICLE_CATEGORY . . . 400
ARTICLE_CONTACTS . . . 421
ARTICLE_DETAILS . . . 396
ARTICLE_FEATURES . . . 405
ARTICLE_LOGISTIC_DETAILS . . . 422
ARTICLE_ORDER . . . 399
ARTICLE_ORDER_DETAILS . . . 408
ARTICLE_PRICE . . . 415
ARTICLE_PRICE_DETAILS . . . 411
ARTICLE_REFERENCE . . . 418
ARTICLE_STATUS . . . 404
ARTICLE_TO_CATALOGGROUP_MAPin context T_NEW_CATALOG . . . 424
ARTICLE_TO_CATALOGGROUP_MAPin context T_NEW_CATALOG . . . 438
ARTICLE_TO_CATALOGGROUP_MAP_ORDER . . . 425
ARTICLE_TYPE . . . 400
ART_ID . . . 425
ART_ID_TO . . . 419
AUTHENTIFICATION . . . 286
BALANCEDTREE . . . 144
BMECAT . . . 43
BOXNO . . . 80
BUYER . . . 74
BUYER_AID . . . 403
BUYER_ID . . . 76
BUYER_IDREF . . . 72
BUYER_NAME . . . 74
BUYER_PID . . . 307
CALCULATION_SEQUENCE . . . 198
CATALOG . . . 49
CATALOG_GROUP_ID . . . 392
CATALOG_GROUP_SYSTEM . . . 229
CATALOG_ID . . . 52
CATALOG_NAME . . . 52
CATALOG_STRUCTURE . . . 231
CATALOG_VERSION . . . 52
CITY . . . 80
CLASSIFICATION_GROUP . . . 206
CLASSIFICATION_GROUPS . . . 204
CLASSIFICATION_GROUP_ARTICLEORDER . . . 406
CLASSIFICATION_GROUP_CONTACTS . . . 218
CLASSIFICATION_GROUP_DESCR . . . 209
CLASSIFICATION_GROUP_FEATURE_TEMPLATE . . . 221
CLASSIFICATION_GROUP_FEATURE_TEMPLATES . . . 220
CLASSIFICATION_GROUP_ID . . . 212
CLASSIFICATION_GROUP_ID2 . . . 213
CLASSIFICATION_GROUP_NAME . . . 209
CLASSIFICATION_GROUP_NOTE . . . 209
CLASSIFICATION_GROUP_ORDER . . . 210
CLASSIFICATION_GROUP_PARENT_ID . . . 210
CLASSIFICATION_GROUP_REMARK . . . 210
CLASSIFICATION_GROUP_SHORTNAME . . . 209
CLASSIFICATION_GROUP_SOURCE . . . 216
CLASSIFICATION_GROUP_SYNONYMS . . . 219
CLASSIFICATION_GROUP_UDX . . . 210
CLASSIFICATION_GROUP_VERSION . . . 214
CLASSIFICATION_SYSTEM . . . 132

Copyright © 2022 BME e.V. - BMEcat® Version 2005.2
Copyright © 2010-2021 BME e.V. - BMEcat® Version 2005.1
Copyright © 2005-2009 BME e.V. - BMEcat® Version 2005
Copyright © 1998–2004 Fraunhofer IAO, Stuttgart; Universität Essen BLI - BMEcat® Version 1.2

CLASSIFICATION_SYSTEM_DESCR. . . . 134
CLASSIFICATION_SYSTEM_FEATURE_TEMPLATE. . . . 164
CLASSIFICATION_SYSTEM_FEATURE_TEMPLATES. . . . 163
CLASSIFICATION_SYSTEM_FULLNAME. . . . 133
CLASSIFICATION_SYSTEM_LEVELS. . . . 134
CLASSIFICATION_SYSTEM_LEVEL_NAME. . . . 142
CLASSIFICATION_SYSTEM_LEVEL_NAMES. . . . 141
CLASSIFICATION_SYSTEM_NAME. . . . 133
CLASSIFICATION_SYSTEM_PARTY_IDREF. . . . 139
CLASSIFICATION_SYSTEM_TYPE. . . . 143
CLASSIFICATION_SYSTEM_VERSION. . . . 133
CLASSIFICATION_SYSTEM_VERSION_DETAILS. . . . 137
CONFIG_CODE. . . . 185
CONFIG_FEATURE. . . . 377
CONFIG_FORMULA. . . . 390
CONFIG_FORMULAS. . . . 389
CONFIG_INFO. . . . 185
CONFIG_PARTS. . . . 378
CONFIG_RULES. . . . 387
CONFIG_STEP. . . . 374
CONTACT. . . . 80
CONTACT_DESCR. . . . 84
CONTACT_DETAILS. . . . 83
CONTACT_ID. . . . 84
CONTACT_IDREF. . . . 218
CONTACT_NAME. . . . 84
CONTACT_ROLE. . . . 86
CONTENT_UNIT. . . . 348
COST_ACCOUNT. . . . 316
COST_CATEGORY_ID. . . . 318
COST_TYPE. . . . 316
COUNTRY. . . . 81
COUNTRY_CODED. . . . 81
COUNTRY_OF_ORIGIN. . . . 54
CURRENCY. . . . 53
CUSTOMS_NUMBER. . . . 365
CUSTOMS_TARIFF_NUMBER. . . . 365
DAILY_PRICE. . . . 187
DATE. . . . 56
DATETIME in the context of AGREEMENT. . . . 95
DATETIME in the context of CATALOG. . . . 413
DATETIME in the context of PRODUCT_PRICE_DETAILS. . . . 56
DATETIME in the context of ARTICLE_PRICE_DETAILS. . . . 190
DEFAULT_FLAG. . . . 181
DELIVERY_TIME. . . . 302
DELIVERY_TIMES. . . . 61
DEPARTMENT. . . . 80
DEPTH. . . . 367
DESCRIPTION_LONG. . . . 301
DESCRIPTION_SHORT. . . . 301
DOCUMENT_CREATOR_IDREF. . . . 113
EAN. . . . 301
EMAIL. . . . 90
EMAILS. . . . 90
ENDVALUE. . . . 184
ERP_GROUP_BUYER. . . . 302
ERP_GROUP_SUPPLIER. . . . 302
EXEMPTION_REASON. . . . 199
FAX. . . . 89
FDESCR. . . . 330
FEATURE. . . . 327
FEATURE_CONTENT. . . . 170
FEATURE_GROUP. . . . 341
FEATURE_GROUP_DESCRIPTION. . . . 345
FEATURE_GROUP_NAME. . . . 343
FEATURE_SYSTEM. . . . 129
FID. . . . 330
FIRST_NAME. . . . 84
FNAME. . . . 328
FORDER. . . . 330
FORMULA. . . . 237
FORMULAS. . . . 236
FORMULA_DESCR. . . . 238
FORMULA_FUNCTION. . . . 247
FORMULA_ID. . . . 237
FORMULA_IDREF. . . . 195
FORMULA_NAME. . . . 238
FORMULA_SOURCE. . . . 245
FORMULA_VERSION. . . . 243
FPARENT_ID. . . . 330
FREF. . . . 257
FTEMPLATE. . . . 332
FT_ALLOWED_VALUES. . . . 227
FT_DATATYPE. . . . 171
FT_DEPENDENCIES. . . . 169
FT_DESCR. . . . 165
FT_FACET. . . . 177
FT_FACETS. . . . 175
FT_GROUP. . . . 161
FT_GROUPS. . . . 160
FT_GROUP_DESCR. . . . 161
FT_GROUP_ID. . . . 161
FT_GROUP_IDREF. . . . 165
FT_GROUP_NAME. . . . 161

Copyright © 2022 BME e.V. - BMEcat® Version 2005.2
Copyright © 2010-2021 BME e.V. - BMEcat® Version 2005.1
Copyright © 2005-2009 BME e.V. - BMEcat® Version 2005
Copyright © 1998–2004 Fraunhofer IAO, Stuttgart; Universität Essen BLI - BMEcat® Version 1.2

FT_GROUP_PARENT_ID . . . 162
FT_ID . . . 165
FT_IDREF . . . 169
FT_MANDATORY . . . 171
FT_NAME . . . 165
FT_NOTE . . . 172
FT_ORDER . . . 172
FT_REMARK . . . 172
FT_SHORTNAME . . . 165
FT_SOURCE . . . 202
FT_SYMBOL . . . 172
FT_SYNONYMS . . . 201
FT_UNIT . . . 171
FT_UNIT_IDREF . . . 171
FT_VALENCY . . . 171
FT_VALUE . . . 180
FT_VALUES . . . 179
FT_VERSION . . . 167
FUNIT . . . 329
FVALUE . . . 335
FVALUE_DETAILS . . . 330
FVALUE_TYPE . . . 330
GENERATION_DATE . . . 52
GENERATOR_INFO . . . 47
GROUPID_HIERARCHY . . . 143
GROUP_DESCRIPTION . . . 232
GROUP_ID . . . 232
GROUP_NAME . . . 232
GROUP_ORDER . . . 232
GROUP_PRODUCT_ORDER . . . 322
GROUP_SYSTEM_DESCRIPTION . . . 230
GROUP_SYSTEM_ID . . . 229
GROUP_SYSTEM_NAME . . . 229
HEADER . . . 46
INCOTERM . . . 69
INHERITANCE . . . 144
INTERNATIONAL_AID . . . 402
INTERNATIONAL_PID . . . 306
INTERNATIONAL_RESTRICTIONS . . . 315
INTERVALVALUE . . . 182
IPP . . . 360
IPP_AUTHENTIFICATION_INFO . . . 284
IPP_DEFINITION . . . 262
IPP_DEFINITIONS . . . 261
IPP_DESCR . . . 263
IPP_ID . . . 262
IPP_IDREF . . . 360
IPP_INBOUND . . . 289
IPP_INBOUND_FORMAT . . . 289
IPP_INBOUND_PARAMS . . . 291
IPP_LANGUAGES . . . 275
IPP_OPERATION . . . 269
IPP_OPERATION_DESCR . . . 269
IPP_OPERATION_ID . . . 269
IPP_OPERATION_IDREF . . . 360
IPP_OPERATION_TYPE . . . 269
IPP_OPERATOR_IDREF . . . 267
IPP_OUTBOUND . . . 271
IPP_OUTBOUND_FORMAT . . . 271
IPP_OUTBOUND_PARAMS . . . 273
IPP_PARAM . . . 362
IPP_PARAM_DEFINITION . . . 287
IPP_PARAM_DESCR . . . 288
IPP_PARAM_NAME . . . 287
IPP_PARAM_NAMEREF . . . 362
IPP_PARAM_VALUE . . . 362
IPP_PRICE_CURRENCIES . . . 277
IPP_PRICE_TYPES . . . 278
IPP_PRODUCTCONFIG_IDREF . . . 281
IPP_PRODUCTLIST_IDREF . . . 282
IPP_RESPONSE_TIME . . . 289
IPP_SUPPLIER_PID . . . 280
IPP_TERRITORIES . . . 276
IPP_TYPE . . . 262
IPP_URI . . . 271
IPP_USER_INFO . . . 283
JURISDICTION . . . 199
KEYWORD . . . 233
LANGUAGE . . . 55
LEADTIME . . . 61
LEGAL_INFO . . . 102
LEGAL_TEXT . . . 103
LENGTH . . . 366
LOCALE . . . 51
LOCATION . . . 69
LOGIN . . . 286
LOWER_BOUND . . . 193
MANUFACTURER_AID . . . 398
MANUFACTURER_IDREF . . . 308
MANUFACTURER_NAME . . . 302
MANUFACTURER_PID . . . 302
MANUFACTURER_TYPE_DESCR . . . 302
MAPPING_LEVEL . . . 144
MAPPING_TYPE . . . 144

Copyright © 2022 BME e.V. - BMEcat® Version 2005.2
Copyright © 2010-2021 BME e.V. - BMEcat® Version 2005.1
Copyright © 2005-2009 BME e.V. - BMEcat® Version 2005
Copyright © 1998–2004 Fraunhofer IAO, Stuttgart; Universität Essen BLI - BMEcat® Version 1.2

MAX_OCCURANCE . . . 376
MEANS_OF_TRANSPORT . . . 368
MEANS_OF_TRANSPORT_ID . . . 369
MEANS_OF_TRANSPORT_NAME . . . 369
MIME . . . 99
MIME_ALT . . . 100
MIME_DESCR . . . 100
MIME_INFO . . . 97
MIME_ORDER . . . 100
MIME_PURPOSE . . . 100
MIME_ROOT . . . 53
MIME_SOURCE . . . 99
MIME_TYPE . . . 99
MIN_OCCURANCE . . . 376
NAME . . . 80
NAME2 . . . 80
NAME3 . . . 80
NO_CU_PER_OU . . . 348
ORDER_UNIT . . . 348
ORIGINAL_DATE . . . 138
PACKING_UNIT . . . 351
PACKING_UNITS . . . 350
PACKING_UNIT_CODE . . . 352
PACKING_UNIT_DESCR . . . 352
PARAMETER . . . 197
PARAMETERS . . . 196
PARAMETER_BASICS . . . 256
PARAMETER_DEFAULT_VALUE . . . 254
PARAMETER_DEFINITION . . . 253
PARAMETER_DEFINITIONS . . . 252
PARAMETER_DESCR . . . 256
PARAMETER_MEANING . . . 254
PARAMETER_NAME . . . 256
PARAMETER_ORDER . . . 254
PARAMETER_ORIGIN . . . 259
PARAMETER_SYMBOL . . . 253
PARAMETER_SYMBOLREF . . . 197
PARAMETER_UNIT . . . 256
PARAMETER_VALUE . . . 197
PARENT_ID . . . 232
PARTIES . . . 115
PARTY . . . 116
PARTY_ID . . . 118
PARTY_IDREF . . . 154
PARTY_ROLE . . . 116
PART_ALTERNATIVE . . . 380
PART_SELECTION_TYPE . . . 378
PASSWORD . . . 286
PHONE . . . 87
PREDEFINED_CONFIG . . . 384
PREDEFINED_CONFIGS . . . 382
PREDEFINED_CONFIG_CODE . . . 384
PREDEFINED_CONFIG_COVERAGE . . . 382
PREDEFINED_CONFIG_DESCR . . . 385
PREDEFINED_CONFIG_NAME . . . 385
PREDEFINED_CONFIG_ORDER . . . 385
PRICE_AMOUNT . . . 192
PRICE_BASE . . . 200
PRICE_CURRENCY . . . 192
PRICE_FACTOR . . . 53
PRICE_FLAG . . . 59
PRICE_FORMULA . . . 195
PRICE_QUANTITY . . . 348
PRICE_TYPE . . . 278
PRICE_UNIT . . . 200
PRICE_UNIT_FACTOR . . . 200
PRODUCT in context T_NEW_CATALOG . . . 292
PRODUCT in context T_UPDATE_PRICES . . . 442
PRODUCT in context T_UPDATE_PRODUCTS . . . 428
PRODUCT_CATEGORY . . . 303
PRODUCT_CONFIG_DETAILS . . . 370
PRODUCT_CONTACTS . . . 358
PRODUCT_DETAILS . . . 299
PRODUCT_DIMENSIONS . . . 366
PRODUCT_FEATURES . . . 320
PRODUCT_IPP_DETAILS . . . 359
PRODUCT_LOGISTIC_DETAILS . . . 363
PRODUCT_ORDER . . . 302
PRODUCT_ORDER_DETAILS . . . 347
PRODUCT_PRICE . . . 191
PRODUCT_PRICE_DETAILS . . . 186
PRODUCT_REFERENCE . . . 353
PRODUCT_STATUS . . . 313
PRODUCT_TO_CATALOGGROUP_MAP in context T_NEW_CATALOG . . . 391
PRODUCT_TO_CATALOGGROUP_MAP in context T_UPDATE_PRODUCTS . . . 433
PRODUCT_TO_CATALOGGROUP_MAP_ORDER . . . 392
PRODUCT_TYPE . . . 53
PROD_ID . . . 392
PROD_ID_TO . . . 355
PUBLIC_KEY . . . 91
QUANTITY_INTERVAL . . . 348
QUANTITY_MAX . . . 349
QUANTITY_MIN . . . 348
REFERENCE_DESCR . . . 355

Copyright © 2022 BME e.V. - BMEcat® Version 2005.2
Copyright © 2010-2021 BME e.V. - BMEcat® Version 2005.1
Copyright © 2005-2009 BME e.V. - BMEcat® Version 2005
Copyright © 1998–2004 Fraunhofer IAO, Stuttgart; Universität Essen BLI - BMEcat® Version 1.2

REFERENCE_FEATURE_GROUP_ID. . . . 325
REFERENCE_FEATURE_GROUP_ID2. . . . 326
REFERENCE_FEATURE_GROUP_NAME. . . . 322
REFERENCE_FEATURE_SYSTEM_NAME. . . . 257
REMARKS. . . . 311
REVISION. . . . 137
REVISION_DATE. . . . 138
SEGMENT. . . . 302
SOURCE_NAME. . . . 152
SOURCE_URI. . . . 152
SPECIAL_TREATMENT_CLASS. . . . 310
STARTVALUE. . . . 183
STATE. . . . 80
STATISTICS_FACTOR. . . . 363
STEP_DESCR_LONG. . . . 375
STEP_DESCR_SHORT. . . . 375
STEP_HEADER. . . . 375
STEP_ID. . . . 375
STEP_INTERACTION_TYPE. . . . 375
STEP_ORDER. . . . 375
STREET. . . . 80
SUB_TIME_SPANS. . . . 66
SUPPLIER. . . . 104
SUPPLIER_AID. . . . 394
SUPPLIER_AID_SUPPLEMENT. . . . 339
SUPPLIER_ALT_AID. . . . 398
SUPPLIER_ALT_PID. . . . 301
SUPPLIER_ID. . . . 106
SUPPLIER_IDREF. . . . 70
SUPPLIER_NAME. . . . 104
SUPPLIER_PID. . . . 297
SUPPLIER_PIDREF. . . . 348
SYNONYM. . . . 151
TAX. . . . 199
TAX_CATEGORY. . . . 198
TAX_DETAILS. . . . 198
TAX_TYPE. . . . 199
TERM. . . . 249
TERM_CONDITION. . . . 250
TERM_EXPRESSION. . . . 250
TERM_ID. . . . 250
TERRITORIES. . . . 127
TERRITORY. . . . 53
TIME. . . . 57
TIMEZONE. . . . 57
TIME_BASE. . . . 63
TIME_SPAN. . . . 63
TIME_VALUE_DURATION. . . . 63
TIME_VALUE_END. . . . 64
TIME_VALUE_INTERVAL. . . . 64
TIME_VALUE_START. . . . 64
TITLE. . . . 84
TRANSPORT. . . . 69
TRANSPORT_REMARK. . . . 69
T_NEW_CATALOG. . . . 128
T_UPDATE_PRICES. . . . 440
T_UPDATE_PRODUCTS. . . . 426
UNIT. . . . 157
UNITS. . . . 156
UNIT_CODE. . . . 158
UNIT_DESCR. . . . 158
UNIT_ID. . . . 158
UNIT_NAME. . . . 158
UNIT_SHORTNAME. . . . 158
UNIT_URI. . . . 158
URL. . . . 84
USER_DEFINED_EXTENSIONS. . . . 295
USER_DEFINED_EXTENSIONS in context HEADER. . . . 232
USER_DEFINED_EXTENSIONSin context CATALOG_STRUCTURE. . . . 47
VALID_END_DATE. . . . 53
VALID_START_DATE. . . . 53
VALUE_IDREF. . . . 180
VALUE_ORDER. . . . 181
VALUE_RANGE. . . . 182
VALUE_SIMPLE. . . . 181
VALUE_TEXT. . . . 181
VARIANT. . . . 338
VARIANTS. . . . 337
VAT_ID. . . . 81
VERSION. . . . 137
VERSION_DATE. . . . 137
VOLUME. . . . 366
VORDER. . . . 337
WEIGHT. . . . 366
WIDTH. . . . 367
ZIP. . . . 80
ZIPBOX. . . . 80

Copyright © 2022 BME e.V. - BMEcat® Version 2005.2
Copyright © 2010-2021 BME e.V. - BMEcat® Version 2005.1
Copyright © 2005-2009 BME e.V. - BMEcat® Version 2005
Copyright © 1998–2004 Fraunhofer IAO, Stuttgart; Universität Essen BLI - BMEcat® Version 1.2

Annex

Basic data types

Designation	Data type name	Explanation	Underlying standards	Format	l.chg. in ver.
Boolean value	dtBOOLEAN	The values "true" or "false" can be entered, case-insensitive, i.e. regardless of capital or small letters. **Examples:** TRUE or true or True	Leaned on: XML Schema Part 2: Data types Second Edition W3C Recommendation 28 October 2004 Data type **boolean** **http://www.w3.org/TR/xmlschema-2/#boolean**		-
Integral positive number	dtCOUNT	Integral positive number. No fractions. No negative numbers. "0" is permitted. No separator for thousand is permitted 2005fd: New data type **Examples:** 0; 1; 2; ...	XML Schema Part 2: Data types Second Edition W3C Recommendation 28 October 2004 Data type **nonNegativeInteger** **http://www.w3.org/TR/xmlschema-2/#nonNegativeInteger**		2005fd
Date and time	dtDATETIME	Date and optional time specification 2005fd: This new data type replaces the following types: **dtDATETYPE**, **dtTIMETYPE** and **dtTIMEZONETYPE** **Examples:** 2005-03-27T08:10:30+01:00 (corresponds to: March 27, 2005 08:10:30 CET); 2005-03; 2005-03-27; 2005-03-27T08:10	XML Schema Part 2: Data types Second Edition W3C Recommendation 28 October 2004 Data type **dateTime** **http://www.w3.org/TR/xmlschema-2/#dateTime** see also: ISO 8601: Representations of dates and times	yyyy-mm-ddThh:mm:ss+tt:00	2005fd
Date	dtDATETYPE	Date specification This data type has been replaced by the **dtDATETIME** data type and will not be allowed in the future. **Examples:** 2005-03-27	ISO 8601 Second edition 1997 **http://www.w3.org/TR/NOTE-datetime-970915**	yyyy-mm-dd	-
Duration	dtDURATION	Duration of time Coded as follows: • P: Period (is mandatory) • nY: n Years • nM: n Months • nD: n Days	XML Schema Part 2: Data types Second Edition W3C Recommendation 28 October 2004 Data type **duration** **http://www.w3.org/TR/xmlschema-2/#duration** see alos: ISO 8601: Representations of dates and times	PnYnMnDTnHnMnS	2005fd

Copyright © 2022 BME e.V. - BMEcat® Version 2005.2
Copyright © 2010-2021 BME e.V. - BMEcat® Version 2005.1
Copyright © 2005-2009 BME e.V. - BMEcat® Version 2005
Copyright © 1998–2004 Fraunhofer IAO, Stuttgart; Universität Essen BLI - BMEcat® Version 1.2

Designation	Data type name	Explanation	Underlying standards	Format	l.chg. in ver.
		• T: Delimiter, required for hours, minutes and seconds • nH: n Hours • nM: n Minutes • nS: n Seconds 2005fd: New data type **Examples:** P5Y P5Y2M10D P5Y2M10DT15H PT15H P5Y			
Floating-point number	dtFLOAT	Floating-point number in accordance with IEEE 754 The decimal separator is the dot. No separator for thousand is permitted. **Examples:** .314159265358979E+1 15.4	IEEE 754-1985: IEEE Standard for Binary Floating-Point Arithmetic siehe dazu auch: XML Schema Part 2: Data types Second Edition W3C Recommendation 28 October 2004 Data type **float** **http://www.w3.org/TR/xmlschema-2/#float**		-
Integer value	dtINTEGER	Whole number with an optional sign. No fractions. No floating-point numbers. No separator for thousand is permitted. **Examples:** 1; 58502; -13	XML Schema Part 2: Data types Second Edition W3C Recommendation 28 October 2004 Data type **integer** **http://www.w3.org/TR/xmlschema-2/#integer**		-
Extended language code	dtLOCALE	Extended language code to idendify language considering scripts, regions or variants of the language. 2005.1: New data type 2005.2: The documentation was updated and refined. **Example:** Screw driver, yellow **Example:** Screw driver, yellow	IETF RFC 5646 Tags for Identifying Languages (**https://datatracker.ietf.org/doc/html/rfc5646**)		2005.1

Copyright © 2022 BME e.V. - BMEcat® Version 2005.2
Copyright © 2010-2021 BME e.V. - BMEcat® Version 2005.1
Copyright © 2005-2009 BME e.V. - BMEcat® Version 2005
Copyright © 1998–2004 Fraunhofer IAO, Stuttgart; Universität Essen BLI - BMEcat® Version 1.2

<table>
<tr><th>Designation</th><th>Data type name</th><th>Explanation</th><th>Underlying standards</th><th>Format</th><th>l.chg. in ver.</th></tr>
<tr><td></td><td></td><td>Example:
Screw driver, <b>yellow</b>

Example:<ul><li>ru-Cyrl (Russian in Cyrillic script; language code with writing system)</li><li>ru-Latn (Russian in Latin script; language code with writing system)</li><li>zh-cmn-Hant-CN (Mandarin, traditinal writing system as used in China)</li><li>zh-cmn-Hans-CN (Mandarin, simplified writing system as used in China)</li><li>zh-yue-HK (Cantonese as used in Hong Kong SAR)</li></ul></td><td></td><td></td><td></td></tr>
<tr><td>Multilingual string</td><td>dtMLSTRING</td><td>This data type differs from the dtSTRING data type only in the additional "lang" attribute, which is added to the respective element. The "lang" attribute specifies the language of text used in the element. It has to be coded according to the dtLANG data type. This new data type allows multilingual catalogs, thus multilangual content (i.e. texts) can be transferred in a single BMEcat document (see also: Chapter: Multilingual Catalog Documents). In a multilingual document, all language-dependent elements of cardinality "single" may occur multiple, though the values of the "lang" attribute must be different.

2005.1: New attribute "locale" for more precise designation of the used language additionally considering scripts, regions and variants of languages was added.
2005.2: Extended the documentation of the attributes

Example 1:
The short description in the DESCRIPTION_SHORT element is provided both in German and English . Note that the "lang" attribute in the second PRODUCT_DETAILS element is not necessary, if the default language of the catalog (CATALOG) has been set to German.
<pre><PRODUCT_DETAILS>
    <DESCRIPTION_SHORT lang="deu">Schraubendreher
</DESCRIPTION_SHORT>
    <DESCRIPTION_SHORT lang="eng">Screw driver</DESCRIPTION_SHORT>
</PRODUCT_DETAILS>
...
<PRODUCT_DETAILS>
    <DESCRIPTION_SHORT>Bohrer</DESCRIPTION_SHORT>
    <DESCRIPTION_SHORT lang="eng">Drill</DESCRIPTION_SHORT>
</PRODUCT_DETAILS></pre>
Example 2:
The short description in the DESCRIPTION_SHORT element is provided both in German and English . Note that the "lang" attribute in the second PRODUCT_DETAILS element is not necessary, if the default language of the catalog (CATALOG) has been set to German.</td><td></td><td></td><td>2005.1</td></tr>
</table>

Copyright © 2022 BME e.V. - BMEcat® Version 2005.2
Copyright © 2010-2021 BME e.V. - BMEcat® Version 2005.1
Copyright © 2005-2009 BME e.V. - BMEcat® Version 2005
Copyright © 1998–2004 Fraunhofer IAO, Stuttgart; Universität Essen BLI - BMEcat® Version 1.2

Designation	Data type name	Explanation	Underlying standards	Format	l.chg. in ver.
		<PRODUCT> ... <PRODUCT_FEATURES> ... <FEATURE> <FTEMPLATE> <FT_ID>EXAMPLE-ID-123</FT_ID> <FT_NAME locale="en">Name</FT_NAME> <FT_NAME locale="de">Name</FT_NAME> <FT_NAME locale="fr">Nom</FT_NAME> <FT_NAME locale="zh-Hans">##</FT_NAME> <FT_NAME locale="zh-Latn">míngch#ng</FT_NAME> </FTEMPLATE> <FVALUE locale="en">Abricot</FVALUE> <FVALUE locale="de-AT">Marille</FVALUE> <FVALUE locale="de-DE">Aprikose</FVALUE> <FVALUE locale="fr">Abricot</FVALUE> <FVALUE locale="zh-Hans">#</FVALUE> <FVALUE locale="zh-Latn">xìngzi</FVALUE> </FEATURE> </PRODUCT_FEATURES> ... </PRODUCT>			
Number	dtNUMBER	Numeric value. Used whenever a more specific numeric format is either not required or impractical. There are no restrictions regarding minimum or maximum values, the number of digits or the number of decimal places. The decimal separator is the dot. No separator for thousand is permitted. **Right:** 15 3.14 -123.456E+10 **Wrong:** 13,20 1.000.000			-
Character string	dtSTRING	Character string according to the encoding standard (see also **Chapter: Coding in XML**) **Example:** Screw driver, yellow			-
Time	dtTIMETYPE	This data type has been replaced by the **dtDATETIME** data type and will not be allowed in the future.	ISO 8601 Second edition 1997 **http://www.w3.org/TR/NOTE-datetime-970915**	hh:mm:ss	-

Copyright © 2022 BME e.V. - BMEcat® Version 2005.2
Copyright © 2010-2021 BME e.V. - BMEcat® Version 2005.1
Copyright © 2005-2009 BME e.V. - BMEcat® Version 2005
Copyright © 1998–2004 Fraunhofer IAO, Stuttgart; Universität Essen BLI - BMEcat® Version 1.2

Designation	Data type name	Explanation	Underlying standards	Format	l.chg. in ver.
		Example: 08:10:30			
Time zone	dtTIMEZONETYPE	This data type has been replaced by the **dtDATETIME** data type and will not be allowed in the future. **Example:** +01:00	ISO 8601 Second edition 1997 **http://www.w3.org/TR/NOTE-datetime-970915**	+tt:00	-

Copyright © 2022 BME e.V. - BMEcat® Version 2005.2
Copyright © 2010-2021 BME e.V. - BMEcat® Version 2005.1
Copyright © 2005-2009 BME e.V. - BMEcat® Version 2005
Copyright © 1998–2004 Fraunhofer IAO, Stuttgart; Universität Essen BLI - BMEcat® Version 1.2

Enumeration data types

Designation	Data type name	Explanation	Underlying standards	Format	l.chg. in ver.
Country codes	dtCOUNTRIES	Country codes to indicate areas of availability (**TERRITORY**). The country subdivision codes can be used to subdivide country codes further, for example into regions. **Examples:** DE (Germany); US (USA) DE-NW (North-Rhine Westphalia in Germany) DK-025 (Roskilde Administrative District in Denmark)	ISO 3166-1 Country codes **http://www.iso.org/iso/en/prods-services/iso3166ma/index.html**	6 characters	-
Currency codes	dtCURRENCIES	Currency codes to indicate currencies 2005.2: The currency code list was updated to ISO 4217:2015. Deprecated currencies codes were kept to ensue downward compatibility. **Examples:** EUR (Euro); USD (US Dollar)	ISO 4217:2015 Currency codes [ISO 4217:2015] **https://www.iso.org/iso-4217-currency-codes.html** Since 1997 the code "EUR" instead of "XEU" has been in place for Euro. This is proscribed as the official code ISO 4217:2000. It is therefore urgently recommended that "EUR" be used as code for Euro.	3 characters	2005.2
Language codes	dtLANG	Language codes to indicate the language used in texts or pictures **Example:** deu (German)	ISO 639-2:1998 Language code [ISO-639-2:1998]	3 characters	-
Package unit codes	dtPUNIT	Package unit codes: this list contains the permitted package units **Example:** C62 (piece)	UN/ECE Recommendation 20 / Package Units **http://www.unece.org/cefact/recommendations/rec_index.htm** The package unit codes have been defined in UN/ECE Recommendation 21 (Codes for types of cargo, packages and packaging materials), and the existing code entries in Recommendation 20 have been flagged for deletion. Due to compatibility, BMEcat 2005 sticks to the 3-letter-code of Recommendation 20. However, future versions of BMEcat may switch to Recommendation 21.	maximal 3 characters	1.2_fd

Copyright © 2022 BME e.V. - BMEcat® Version 2005.2
Copyright © 2010-2021 BME e.V. - BMEcat® Version 2005.1
Copyright © 2005-2009 BME e.V. - BMEcat® Version 2005
Copyright © 1998–2004 Fraunhofer IAO, Stuttgart; Universität Essen BLI - BMEcat® Version 1.2

Special data types

Designation	Data type name	Explanation	Underlying standards	Format	l.chg. in ver.
Catalog group extension	udxCATALOGGRO	This data type is defined as empty; it serves for user-defined, thus non-BMEcat-elements for describing catalog groups.			-
Classification group extension	udxCLASSGROUP	This data type is defined as empty; it serves for user-defined, thus non-BMEcat-elements for describing classification groups.			-
Catalog header extension	udxHEADER	This data type is defined as empty; it serves for user-defined, thus non-BMEcat-elements for extending the catalog header.			-
Product extension	udxPRODUCT	This data type is defined as empty; it serves for user-defined, thus non-BMEcat-elements for describing products.			-

Copyright © 2022 BME e.V. - BMEcat® Version 2005.2
Copyright © 2010-2021 BME e.V. - BMEcat® Version 2005.1
Copyright © 2005-2009 BME e.V. - BMEcat® Version 2005
Copyright © 1998–2004 Fraunhofer IAO, Stuttgart; Universität Essen BLI - BMEcat® Version 1.2

History of changes Version 2005fd

Change	Description of changes
ACADEMIC_TITLE	New element
ACCOUNTING_INFO	New element
ADDRESS	This element has been extended by the following sub-elements: **DEPARTMENT**, **CONTACT_DETAILS**, **VAT_ID**; the sub-element **EMAIL** may occur more than once if the e-mail address comes with an element **PUBLIC_KEY**.
ADDRESS in context BUYER	This element has been extended by the following sub-elements: **DEPARTMENT**, **CONTACT_DETAILS**, **VAT_ID**; the sub-element **EMAIL** may occur more than once if the e-mail address comes with an element **PUBLIC_KEY**.
ADDRESS in context SUPPLIER	This element has been extended by the following sub-elements: **DEPARTMENT**, **CONTACT_DETAILS**, **VAT_ID**; the sub-element **EMAIL** may occur more than once if the e-mail address comes with an element **PUBLIC_KEY**.
AGREEMENT	The element was revised and the following sub-elements were added: **AGREEMENT_LINE_ID**, **AGREEMENT_START_DATE**, **AGREEMENT_END_DATE**, **SUPPLIER_IDREF**, **AGREEMENT_DESCR**, **MIME_INFO**
AGREEMENT -->default	New attribute
AGREEMENT -->type	New attribute
AGREEMENT_DESCR	New element
AGREEMENT_END_DATE	This element replaces with a modified semantics the former **DATETIME** in the context of AGREEMENT element and its type='agreement_end_date' attribute.
AGREEMENT_IDREF	New element
AGREEMENT_LINE_ID	New element
AGREEMENT_LINE_IDREF	New element
AGREEMENT_REF	New element
AGREEMENT_START_DATE	This element replaces with a modified semantics the former **DATETIME** in the context of AGREEMENT element and its type='agreement_start_date' attribute.
ALLOWED_VALUE	This element has been extended by the following sub-elements: **ALLOWED_VALUE_VERSION**, **ALLOWED_VALUE_SHORTNAME**, **ALLOWED_VALUE_SYNONYMS**, **ALLOWED_VALUE_SOURCE**.
ALLOWED_VALUE_NAME	The maximum length has been extended from 60 characters to 80 characters.
ALLOWED_VALUE_SHORTNAME	New element
ALLOWED_VALUE_SOURCE	New element
ALLOWED_VALUE_SYNONYMS	New element
ALLOWED_VALUE_VERSION	New element
AREA	New element
AREAS	New element
AREA_DESCR	New element
AREA_ID	New element
AREA_IDREF	New element

Copyright © 2022 BME e.V. - BMEcat® Version 2005.2
Copyright © 2010-2021 BME e.V. - BMEcat® Version 2005.1
Copyright © 2005-2009 BME e.V. - BMEcat® Version 2005
Copyright © 1998–2004 Fraunhofer IAO, Stuttgart; Universität Essen BLI - BMEcat® Version 1.2

Change	Description of changes
AREA_LEGAL_INFO	New element
AREA_NAME	New element
AREA_REFS	New element
AUTHENTIFICATION	New element
BALANCEDTREE	New element
BMECAT -->version =2005	New value
BUYER_ID	The maximum length has been extended from 50 characters to 250 characters.
BUYER_IDREF	This new element replaces together with the **PARTY** element the **BUYER** element.
BUYER_PID	This new element replaces the **BUYER_AID** element.
CATALOG	The element was revised and the following sub-elements were added: **AREA_REFS**, **PRICE_TYPE**, **PRICE_FACTOR**, **VALID_START_DATE**, **VALID_END_DATE**, **PRODUCT_TYPE**, **PRODUCT_CATEGORY**, **COUNTRY_OF_ORIGIN**, **TIME_SPAN**, **LEADTIME**, **TRANSPORT**, **SUPPLIER_IDREF**
CATALOG_STRUCTURE -->type	The maximum length has been extended from 4 characters to 20 characters.
CLASSIFICATION_GROUP	The element was revised and the following sub-elements were added **CLASSIFICATION_GROUP_ID2**, **CLASSIFICATION_GROUP_VERSION**, **CLASSIFICATION_GROUP_SHORTNAME**, **CLASSIFICATION_GROUP_SOURCE**, **CLASSIFICATION_GROUP_NOTE**, **CLASSIFICATION_GROUP_REMARK**, **CLASSIFICATION_GROUP_CONTACTS**, **CLASSIFICATION_GROUP_ORDER**, **MIME_INFO**, **CLASSIFICATION_GROUP_UDX**
CLASSIFICATION_GROUP -->level	The data type of this attribute has been changed from **dtINTEGER** to **dtCOUNT** in order to prevent negative hierarchy levels.
CLASSIFICATION_GROUP_CONTACTS	New element
CLASSIFICATION_GROUP_DESCR	The maximum length has been extended from 250 characters to 16,000 characters.
CLASSIFICATION_GROUP_FEATURE_TEMPLATE	The element was revised and the following sub-elements were added: **FT_VALUES** (in 2005fd FT_DOMAIN_VALUES), **FT_VALENCY**, **FT_SYMBOL**, **MIME_INFO**, **FT_SOURCE**, **FT_NOTE**, **FT_REMARK**
CLASSIFICATION_GROUP_ID2	New element
CLASSIFICATION_GROUP_ID -->type	New attribute
CLASSIFICATION_GROUP_NAME	The maximum length has been extended from 60 characters to 250 characters.
CLASSIFICATION_GROUP_NOTE	New element
CLASSIFICATION_GROUP_ORDER	New element
CLASSIFICATION_GROUP_REMARK	New element
CLASSIFICATION_GROUP_SHORTNAME	New element
CLASSIFICATION_GROUP_SOURCE	New element

Copyright © 2022 BME e.V. - BMEcat® Version 2005.2
Copyright © 2010-2021 BME e.V. - BMEcat® Version 2005.1
Copyright © 2005-2009 BME e.V. - BMEcat® Version 2005
Copyright © 1998–2004 Fraunhofer IAO, Stuttgart; Universität Essen BLI - BMEcat® Version 1.2

Change	Description of changes
CLASSIFICATION_GROUP_UDX	New element
CLASSIFICATION_GROUP_VERSION	New element
CLASSIFICATION_SYSTEM	The element was revised and the following sub-elements were added: **CLASSIFICATION_SYSTEM_VERSION_DETAILS**, **CLASSIFICATION_SYSTEM_PARTY_IDREF**, **CLASSIFICATION_SYSTEM_TYPE**
CLASSIFICATION_SYSTEM_DESCR	The maximum length has been extended from 250 characters to 16,000 characters.
CLASSIFICATION_SYSTEM_FEATURE_TEMPLATE	The element was revised and the following sub-elements were added: **FT_SHORTNAME**, **FT_VERSION**, **FT_GROUPID**, **FT_GROUPNAME**, **FT_NAME**, **FEATURE_CONTENT**
CLASSIFICATION_SYSTEM_FULLNAME	The maximum length has been extended from 60 characters to 80 characters.
CLASSIFICATION_SYSTEM_NAME	The maximum length has been extended from 20 characters to 80 characters.
CLASSIFICATION_SYSTEM_NAME=CPV-yyyy-mm-dd	New value
CLASSIFICATION_SYSTEM_NAME=EOTD-yyyy-mm-dd	New value
CLASSIFICATION_SYSTEM_NAME=GPC-x.y	New value
CLASSIFICATION_SYSTEM_NAME=PROFICLASS-x.y	New value
CLASSIFICATION_SYSTEM_NAME=RNTD-x.y	New value
CLASSIFICATION_SYSTEM_NAME=RUS-x.y	New value
CLASSIFICATION_SYSTEM_PARTY_IDREF	New element
CLASSIFICATION_SYSTEM_TYPE	New element
CLASSIFICATION_SYSTEM_VERSION_DETAILS	This element replaces with a modified semantics the former **CLASSIFICATION_SYSTEM_VERSION** element; it contains the following new sub-elements: **VERSION**, **VERSION_DATE**, **REVISION**, **REVISION_DATE**, **ORIGINAL_DATE**
CONFIG_CODE	New element
CONFIG_FEATURE	New element
CONFIG_FORMULA	New element
CONFIG_FORMULAS	New element
CONFIG_INFO	New element
CONFIG_PARTS	New element

Copyright © 2022 BME e.V. - BMEcat® Version 2005.2
Copyright © 2010-2021 BME e.V. - BMEcat® Version 2005.1
Copyright © 2005-2009 BME e.V. - BMEcat® Version 2005
Copyright © 1998–2004 Fraunhofer IAO, Stuttgart; Universität Essen BLI - BMEcat® Version 1.2

Change	Description of changes
CONFIG_STEP	New element
CONTACT_DESCR	New element
CONTACT_DETAILS	New element
CONTACT_ID	New element
CONTACT_IDREF	New element
CONTACT_NAME	New element
CONTACT_ROLE	New element
COST_ACCOUNT	New element
COST_CATEGORY_ID	New element
COST_TYPE	New element
COUNTRY_CODED	New element
COUNTRY_OF_ORIGIN	New element
CUSTOMS_NUMBER	New element
CUSTOMS_TARIFF_NUMBER	New element
DEFAULT_FLAG	New element
DELIVERY_TIMES	This element replaces the former **DELIVERY_TIME** element
DEPARTMENT	New element
DEPTH	New element
EMAIL	The maximum length has been extended from 100 characters to 250 characters.
EMAILS	New element
ENDVALUE	New element
FAX -->type	New attribute
FEATURE	The element was revised and the following sub-elements were added: **FREF** (in 2005fd CLASSIFICATION_FEATURE_REF), **CLASSIFICATION_SYSTEM_FEATURE_TEMPLATE**, **VALUE_IDREF**, **FVALUE_TYPE**
FEATURE_CONTENT	New element
FORMULA	New element
FORMULAS	New element
FORMULA_DESCR	New element
FORMULA_FUNCTION	New element
FORMULA_ID	New element
FORMULA_IDREF	New element

Copyright © 2022 BME e.V. - BMEcat® Version 2005.2
Copyright © 2010-2021 BME e.V. - BMEcat® Version 2005.1
Copyright © 2005-2009 BME e.V. - BMEcat® Version 2005
Copyright © 1998–2004 Fraunhofer IAO, Stuttgart; Universität Essen BLI - BMEcat® Version 1.2

Change	Description of changes
FORMULA_NAME	New element
FORMULA_SOURCE	New element
FORMULA_VERSION	New element
FREF	New element
FT_DATATYPE =count	New value
FT_DATATYPE =date	New value
FT_DATATYPE =date-time	New value
FT_DATATYPE =float	New value
FT_DATATYPE =time	New value
FT_DESCR	The maximum length has been extended from 250 characters to 16,000 characters.
FT_FACET	New element
FT_FACETS	New element
FT_GROUP	New element
FT_GROUPS	New element
FT_GROUP_DESCR	New element
FT_GROUP_ID	New element
FT_GROUP_PARENT_ID	New element
FT_NAME	The maximum length has been extended from 60 characters to 80 characters.
FT_NOTE	New element
FT_REMARK	New element
FT_SHORTNAME	New element
FT_SOURCE	New element
FT_SYNONYMS	New element
FT_UNIT	The maximum length has been extended from 20 characters to 80 characters.
FT_UNIT_IDREF	This new element replaces with a modified semantics the former **FT_UNIT** element.
FT_VALENCY	New element
FT_VALUE	New element
FT_VALUES	New element
FT_VERSION	New element
FVALUE_TYPE	New element

Copyright © 2022 BME e.V. - BMEcat® Version 2005.2
Copyright © 2010-2021 BME e.V. - BMEcat® Version 2005.1
Copyright © 2005-2009 BME e.V. - BMEcat® Version 2005
Copyright © 1998–2004 Fraunhofer IAO, Stuttgart; Universität Essen BLI - BMEcat® Version 1.2

Change	Description of changes
GENERATION_DATE	This new element replaces with a modified semantics the former **DATETIME** in the context of CATALOG element and its type='generation_date' attribute.
GROUPID_HIERARCHY	New element
GROUP_PRODUCT_ORDER	New element
HEADER	The element was revised and the following sub-elements were added: **BUYER_IDREF**, **LEGAL_INFORMATION**, **SUPPLIER_IDREF**
INCOTERM	New element
INHERITANCE	New element
INTERNATIONAL_PID	This new element replaces with an increased maximum field length (100 characters instead of 14 respectively 50 characters) the former **EAN** and **SUPPLIER_ALT_PID** elements.
INTERNATIONAL_RESTRICTIONS	New element
INTERVALVALUE	New element
IPP	New element
IPP_AUTHENTIFICATION_INFO	New element
IPP_DEFINITION	New element
IPP_DEFINITIONS	New element
IPP_ID	New element
IPP_IDREF	New element
IPP_INBOUND	New element
IPP_INBOUND_FORMAT	New element
IPP_INBOUND_PARAMS	New element
IPP_LANGUAGES	New element
IPP_OPERATION	New element
IPP_OPERATION_ID	New element
IPP_OPERATION_IDREF	New element
IPP_OPERATION_TYPE	New element
IPP_OPERATOR_IDREF	New element
IPP_OUTBOUND	New element
IPP_OUTBOUND_FORMAT	New element
IPP_OUTBOUND_PARAMS	New element
IPP_PARAM	New element
IPP_PARAM_DEFINITION	New element
IPP_PARAM_DESCR	New element

Copyright © 2022 BME e.V. - BMEcat® Version 2005.2
Copyright © 2010-2021 BME e.V. - BMEcat® Version 2005.1
Copyright © 2005-2009 BME e.V. - BMEcat® Version 2005
Copyright © 1998–2004 Fraunhofer IAO, Stuttgart; Universität Essen BLI - BMEcat® Version 1.2

Change	Description of changes
IPP_PARAM_NAME	New element
IPP_PARAM_NAMEREF	New element
IPP_PARAM_VALUE	New element
IPP_PRICE_CURRENCIES	New element
IPP_PRICE_TYPES	New element
IPP_PRODUCTCONFIG_IDREF	New element
IPP_PRODUCTLIST_IDREF	New element
IPP_RESPONSE_TIME	New element
IPP_SUPPLIER_PID	New element
IPP_TERRITORIES	New element
IPP_TYPE	New element
IPP_URI	New element
IPP_USER_INFO	New element
LANGUAGE -->default	New attribute
LEADTIME	This new element replaces with a modified semantics the former **DELIVERY_TIME** element.
LEGAL_INFO	New element
LEGAL_TEXT	New element
LENGTH	New element
LOCATION	New element
LOGIN	New element
MANUFACTURER_IDREF	New element
MANUFACTURER_PID	This new element replaces former **MANUFACTURER_AID** element.
MAPPING_LEVEL	New element
MAPPING_TYPE	New element
MAX_OCCURANCE	New element
MEANS_OF_TRANSPORT	New element
MEANS_OF_TRANSPORT_ID	New element
MEANS_OF_TRANSPORT_NAME	New element
MIME_ALT	The maximum length has been extended from 50 characters to 80 characters.
MIME_PURPOSE	The list of allowed values has been extended by 'icon' and 'safety_data_sheet'.

Copyright © 2022 BME e.V. - BMEcat® Version 2005.2
Copyright © 2010-2021 BME e.V. - BMEcat® Version 2005.1
Copyright © 2005-2009 BME e.V. - BMEcat® Version 2005
Copyright © 1998–2004 Fraunhofer IAO, Stuttgart; Universität Essen BLI - BMEcat® Version 1.2

Change	Description of changes
MIME_PURPOSE =icon	New value
MIME_PURPOSE =safety_data_sheet	New value
MIN_OCCURANCE	New element
ORIGINAL_DATE	New element
PACKING_UNIT	New element
PACKING_UNITS	New element
PACKING_UNIT_CODE	New element
PACKING_UNIT_DESCR	New element
PARAMETER	New element
PARAMETERS	New element
PARAMETER_BASICS	New element
PARAMETER_DEFAULT_VALUE	New element
PARAMETER_DEFINITION	New element
PARAMETER_DEFINITIONS	New element
PARAMETER_DESCR	New element
PARAMETER_MEANING	New element
PARAMETER_NAME	New element
PARAMETER_ORDER	New element
PARAMETER_ORIGIN	New element
PARAMETER_SYMBOL	New element
PARAMETER_SYMBOLREF	New element
PARAMETER_UNIT	New element
PARAMETER_VALUE	New element
PARTIES	New element
PARTY	New element
PARTY_ID	New element
PARTY_IDREF	New element
PARTY_ROLE	New element
PART_ALTERNATIVE	New element
PART_SELECTION_TYPE	New element

Copyright © 2022 BME e.V. - BMEcat® Version 2005.2
Copyright © 2010-2021 BME e.V. - BMEcat® Version 2005.1
Copyright © 2005-2009 BME e.V. - BMEcat® Version 2005
Copyright © 1998–2004 Fraunhofer IAO, Stuttgart; Universität Essen BLI - BMEcat® Version 1.2

Change	Description of changes
PASSWORD	New element
PHONE	The maximum length has been extended from 30 characters to 50 characters.
PHONE -->type	New attribute
PREDEFINED_CONFIG	New element
PREDEFINED_CONFIGS	New element
PREDEFINED_CONFIG_CODE	New element
PREDEFINED_CONFIG_ COVERAGE	New element
PREDEFINED_CONFIG_DESCR	New element
PREDEFINED_CONFIG_NAME	New element
PREDEFINED_CONFIG_ORDER	New element
PRICE_BASE	New element
PRICE_FLAG -->type	The list of values can now be extended. The list here contains only the predefined values.
PRICE_FLAG -->type =incl_ insurance	The new value 'incl_insurance' replaces the value **PRICE_FLAG -->type =incl_assurance**.
PRICE_FLAG -->type =userdefined_ _	User-defined value
PRICE_FORMULA	New element
PRICE_TYPE	New element
PRICE_TYPE =on_request	New value
PRICE_UNIT	New element
PRICE_UNIT_FACTOR	New element
PRODUCT in context T_NEW_CATALOG	This new element replaces with a modified semantics the former **ARTICLE** in context T_NEW_CATALOGelement; it has been extended by the following sub-elements: **SUPPLIER_ IDREF**, **PRODUCT_CONTACTS**, **PRODUCT_IPP_DETAILS**, **PRODUCT_LOGISTIC_DETAILS**, **PRODUCT_CONFIG_DETAILS**, **PRODUCT_MODULES**; the sub-element **SUPPLIER_AID** has been renamed to **SUPPLIER_PID**; the sub-element **ARTICLE_DETAILS** has been renamed to **PRODUCT_DETAILS**; the sub-element **ARTICLE_FEATURES** has been renamed to **PRODUCT_FEATURES**; the sub-element **ARTICLE_ORDER_DETAILS** has been renamed to **PRODUCT_ORDER_DETAILS**; the sub-element **ARTICLE_ PRICE_DETAILS** has been renamed to **PRODUCT_PRICE_DETAILS**; the sub-element **ARTICLE_REFERENCE** has been renamed to **PRODUCT_REFERENCE**
PRODUCT in context T_UPDATE_PRICES	This new element replaces with a modified semantics the former **ARTICLE** in context T_UPDATE_PRICESelement; it has been extended by the **SUPPLIER_IDREF** sub-element; the sub-element **SUPPLIER_AID** has been renamed to **SUPPLIER_PID**; the sub-element **ARTICLE_PRICE_DETAILS** has been renamed to **PRODUCT_PRICE_DETAILS**
PRODUCT in context T_UPDATE_PRODUCTS	This new element replaces with a modified semantics the former **ARTICLE** in context T_UPDATE_PRODUCTSelement; it has been extended by the following sub-elements: **SUPPLIER_IDREF**, **PRODUCT_CONTACTS**, **PRODUCT_IPP_DETAILS**, **PRODUCT_LOGISTIC_DETAILS**, **PRODUCT_CONFIG_DETAILS**, **PRODUCT_MODULES**; the sub-element **SUPPLIER_AID** has been renamed to **SUPPLIER_PID**; the sub-element **ARTICLE_DETAILS** has been renamed to **PRODUCT_DETAILS**; the sub-element **ARTICLE_ FEATURES** has been renamed to **PRODUCT_FEATURES**; the sub-element **ARTICLE_ORDER_DETAILS** has been renamed to **PRODUCT_ORDER_DETAILS**; the sub-element **ARTICLE_PRICE_DETAILS** has been renamed to **PRODUCT_PRICE_DETAILS**; the sub-element **ARTICLE_REFERENCE** has been renamed to **PRODUCT_REFERENCE**

Copyright © 2022 BME e.V. - BMEcat® Version 2005.2
Copyright © 2010-2021 BME e.V. - BMEcat® Version 2005.1
Copyright © 2005-2009 BME e.V. - BMEcat® Version 2005
Copyright © 1998–2004 Fraunhofer IAO, Stuttgart; Universität Essen BLI - BMEcat® Version 1.2

Change	Description of changes
PRODUCT_CATEGORY	New element
PRODUCT_CONFIG_DETAILS	New element
PRODUCT_CONTACTS	New element
PRODUCT_DETAILS	This new element replaces with a modified semantics the **ARTICLE_DETAILS** element; it has been extended by the following sub-elements: **INTERNATIONAL_PID**, **MANUFACTURER_IDREF**, **INTERNATIONAL_RESTRICTIONS**, **ACCOUNTING_INFO**, **AGREEMENT_REF**, **PRODUCT_TYPE**, **PRODUCT_CATEGORY**; the sub-element **SUPPLIER_ALT_AID** has been replaced by **SUPPLIER_ALT_PID**; the sub-element **MANUFACTURER_AID** has been replaced by **MANUFACTURER_PID**; the sub-element **REMARKS** may occur more than once and has been extended by a 'type' attribute.
PRODUCT_DIMENSIONS	New element
PRODUCT_FEATURES	This new element replaces with a modified semantics the **ARTICLE_FEATURES** element; it has been extended by the following sub-elements: **REFERENCE_FEATURE_GROUP_ID2**, **GROUP_PRODUCT_ORDER**
PRODUCT_IPP_DETAILS	New element
PRODUCT_LOGISTIC_DETAILS	New element
PRODUCT_ORDER	This new element replaces the former **ARTICLE_ORDER** element.
PRODUCT_ORDER_DETAILS	This new element replaces with a modified semantics the **ARTICLE_ORDER_DETAILS** element; it has been extended by the following sub-elements: **SUPPLIER_PIDREF**, **SUPPLIER_IDREF**, **QUANTITY_MAX**, **PACKING_UNITS**
PRODUCT_PRICE	This new element replaces with a modified semantics the **ARTICLE_PRICE** element; it has been extended by the following sub-elements: **PRICE_FORMULA**, **AREA_REFS**, **PRICE_BASE**, **PRICE_FLAG**.
PRODUCT_PRICE -->price_type =on_request	New value
PRODUCT_PRICE_DETAILS	This new element replaces with a modified semantics the **ARTICLE_PRICE_DETAILS** element; it has been extended by the following sub-elements: **VALID_START_DATE**, **VALID_END_DATE**
PRODUCT_REFERENCE	This new element replaces with a modified semantics the **ARTICLE_REFERENCE** element; the sub-element **ART_ID_TO** has been renamed to **PROD_ID_TO**; the sub-elements **SUPPLIER_IDREF** and **REFERENCE_DESCR** were added.
PRODUCT_REFERENCE -->type =base_product	New value
PRODUCT_STATUS	This new element replace the **ARTICLE_STATUS** element.
PRODUCT_STATUS -->type =core_product	The new value 'core_product' replace the value 'core_article'.
PRODUCT_STATUS -->type =new_product	The new value 'new_product' replaces the value 'new_article'.
PRODUCT_STATUS -->type =old_product	The new value 'old_product' replaces the value 'old_article'.
PRODUCT_TO_CATALOGGROUP_MAP in context T_NEW_CATALOG	This new element replace the **ARTICLE_TO_CATALOGGROUP_MAP**in context T_NEW_CATALOG element. Contrary to BMEcat 1.2, products can now be mapped to any catalog group. The mapping is no longer restricted to groups on the lowest level, thus to groups (**CATALOG_STRUCTURE**) with attribute "**type**" having the value "**leaf**".

Copyright © 2022 BME e.V. - BMEcat® Version 2005.2
Copyright © 2010-2021 BME e.V. - BMEcat® Version 2005.1
Copyright © 2005-2009 BME e.V. - BMEcat® Version 2005
Copyright © 1998–2004 Fraunhofer IAO, Stuttgart; Universität Essen BLI - BMEcat® Version 1.2

Change	Description of changes
PRODUCT_TO_CATALOGGROUP_MAP in context T_UPDATE_PRODUCTS	This new element replace the **ARTICLE_TO_CATALOGGROUP_MAP**in context T_NEW_CATALOG element. Contrary to BMEcat 1.2, products can now be mapped to any catalog group. The mapping is no longer restricted to groups on the lowest level, thus to groups (**CATALOG_STRUCTURE**) with attribute "**type**" having the value "**leaf**".
PRODUCT_TYPE	New element
PROD_ID_TO	This new element replaces the **ART_ID_TO** element.
QUANTITY_INTERVAL	The data type has been changed from **dtINTEGER** to **dtFLOAT**.
QUANTITY_MAX	New element
QUANTITY_MIN	The data type has beend changed from **dtINTEGER** to **dtFLOAT**.
REFERENCE_DESCR	New element
REFERENCE_FEATURE_GROUP_ID2	New element
REFERENCE_FEATURE_GROUP_ID -->type	New attribute
REFERENCE_FEATURE_SYSTEM_NAME =CPV-yyyy-mm-dd	New value
REFERENCE_FEATURE_SYSTEM_NAME =EOTD-yyyy-mm-dd	New value
REFERENCE_FEATURE_SYSTEM_NAME =GPC-x.y	New value
REFERENCE_FEATURE_SYSTEM_NAME =PROFICLASS-x.y	New value
REFERENCE_FEATURE_SYSTEM_NAME =RNTD-x.y	New value
REFERENCE_FEATURE_SYSTEM_NAME =RUS-x.y	New value
REMARKS -->type	New attribute
REVISION	New element
REVISION_DATE	New element
SOURCE_NAME	New element
SOURCE_URI	New element
STARTVALUE	New element
STEP_DESCR_LONG	New element
STEP_DESCR_SHORT	New element
STEP_HEADER	New element

Copyright © 2022 BME e.V. - BMEcat® Version 2005.2
Copyright © 2010-2021 BME e.V. - BMEcat® Version 2005.1
Copyright © 2005-2009 BME e.V. - BMEcat® Version 2005
Copyright © 1998–2004 Fraunhofer IAO, Stuttgart; Universität Essen BLI - BMEcat® Version 1.2

Change	Description of changes
STEP_ID	New element
STEP_INTERACTION_TYPE	New element
STEP_ORDER	New element
SUB_TIME_SPANS	New element
SUPPLIER_ALT_PID	This new element replaces the **SUPPLIER_ALT_AID** element.
SUPPLIER_ID	The maximum length has been extended from 50 characters to 250 characters.
SUPPLIER_IDREF	This new element together with the **PARTY** replaces the **SUPPLIER** element.
SUPPLIER_PID	This new element replaces the **SUPPLIER_AID** element.
SUPPLIER_PIDREF	This new element replaces the **ART_ID_TO** element.
SYNONYM	The maximum length has been extended from 60 characters to 80 characters.
TERM	New element
TERM_CONDITION	New element
TERM_EXPRESSION	New element
TERM_ID	New element
TERRITORIES	New element
TIME_BASE	New element
TIME_SPAN	New element
TIME_VALUE_END	New element
TIME_VALUE_START	New element
TITLE	New element
TRANSPORT	New element
TRANSPORT_REMARK	New element
T_NEW_CATALOG	The element was revised and the following sub-elements were added: **PARTIES**, **AREAS**, **FORMULAS**, **IPP_DEFINITIONS**, **MODULES**, **PRODUCT** in context T_NEW_CATALOG, **PRODUCT_TO_CATALOGGROUP_MAP** in context T_NEW_CATALOG; the sub-element **FEATURE_SYSTEM** has been removed.
T_UPDATE_PRICES	The element was revised and the following sub-elements were added: **PARTIES**, **FORMULAS**, **AREAS**, **PRODUCT** in context T_UPDATE_PRODUCTS
T_UPDATE_PRODUCTS	The element was revised and the following sub-elements were added: **PARTIES**, **FORMULAS**, **MODULES**, **AREAS**, **PRODUCT** in context T_UPDATE_PRICES, **PRODUCT_TO_CATALOGGROUP_MAP** in context T_UPDATE_PRODUCTS
UNIT	This element has been extended by the following sub-elements:**UNIT_SHORTNAME**, **UNIT_CODE**, **UNIT_URI**
UNIT_CODE	New element
UNIT_NAME	The maximum length has been extended from 60 characters to 80 characters.
UNIT_SHORTNAME	New element

Copyright © 2022 BME e.V. - BMEcat® Version 2005.2
Copyright © 2010-2021 BME e.V. - BMEcat® Version 2005.1
Copyright © 2005-2009 BME e.V. - BMEcat® Version 2005
Copyright © 1998–2004 Fraunhofer IAO, Stuttgart; Universität Essen BLI - BMEcat® Version 1.2

Change	Description of changes
UNIT_URI	New element
URL	The maximum length has been extended from 100 characters to 250 characters.
VALID_END_DATE	This new element replaces with a modified semantics the **DATETIME** in the context of PRODUCT_PRICE_DETAILS element and its attribute type='valid_end_date'.
VALID_START_DATE	This new element replaces with a modified semantics the **DATETIME** in the context of PRODUCT_PRICE_DETAILS element and its attribute type='valid_start_date'.
VALUE_IDREF	New element
VALUE_ORDER	New element
VALUE_RANGE	New element
VALUE_SIMPLE	New element
VALUE_TEXT	New element
VAT_ID	New element
VERSION	New element
VERSION_DATE	New element
VOLUME	New element
WEIGHT	New element
WIDTH	New element
dtCOUNT	New data type
dtDATETIME	This new data type replaces the following types: **dtDATETYPE**, **dtTIMETYPE** and **dtTIMEZONETYPE**
dtDURATION	New data type

Copyright © 2022 BME e.V. - BMEcat® Version 2005.2
Copyright © 2010-2021 BME e.V. - BMEcat® Version 2005.1
Copyright © 2005-2009 BME e.V. - BMEcat® Version 2005
Copyright © 1998–2004 Fraunhofer IAO, Stuttgart; Universität Essen BLI - BMEcat® Version 1.2

History of changes Version 2005

Change	Description of changes
ADDRESS	The sub-elements **PHONE** und **FAX** may occure more than once, due to their type-attribute.
ADDRESS in context BUYER	The sub-elements **PHONE** und **FAX** may occure more than once, due to their type-attribute.
ADDRESS in context SUPPLIER	The sub-elements **PHONE** und **FAX** may occure more than once, due to their type-attribute.
ALLOWED_VALUE_SOURCE	The sub-element **SOURCE_DESCR** was renamed to **SOURCE_NAME**.
AREA_LEGAL_INFO	This element was named **AREA_LEGAL_INFORMATION** in BMEcat 2005fd and is now named **AREA_LEGAL_INFO**.
ARTICLE_REFERENCE -->type =mandatory	This value was erased in version 2005fd by accident and was reinserted in version 2005.
CALCULATION_SEQUENCE	New element
CATALOG	The sub-elements **PRICE_TYPE** and **PRODUCT_CATEGORY**, which had been added in BMEcat 2005 final draft, were removed again. The elements **TIME_SPAN** and **LEADTIME** were replaced with **DELIVERY_TIMES**.
CLASSIFICATION_GROUP	The attribute '**type**' is now optional.
CLASSIFICATION_GROUP_ CONTACTS	The sub-element **CONTACT_IDREF** may occur more than once.
CLASSIFICATION_GROUP_ FEATURE_TEMPLATE	The sub-element **FT_DOMAIN_VALUES** was renamed to **FT_VALUES**. The sub-element **FT_UNIT_IDREF** was added as an alternative to **FT_UNIT**. The sub-elements **FT_ MANDATORY** and **FT_DATATYPE** were changed from mandatory elements to optional elements. The sub-element **FT_DEPENDENCIES** was added.
CLASSIFICATION_GROUP_ SOURCE	The sub-element **SOURCE_DESCR** was renamed to **SOURCE_NAME**.
CLASSIFICATION_SYSTEM	The sub-element **FT_GROUPS** was added.
CLASSIFICATION_SYSTEM_ FEATURE_TEMPLATE	The sub-elements **FT_GROUPID** and **FT_GROUPNAME** were replaced by the new sub-elements **FT_GROUP_IDREF** and **FT_GROUP_NAME** respectively. The element itself was transformed into an XML-type. The sub-element **FT_DEPENDENCIES** was added.
CLASSIFICATION_SYSTEM_ LEVEL_NAME	The maximum length has been extended from 60 characters to 80 characters.
CONFIG_FEATURE	The sub-element **CLASSIFICATION_FEATURE_REF** was renamed to **FREF**. The sub-element **CLASSIFICATION_SYSTEM_FEATURE_TEMPLATE** was replaced with the fully identical element **FTEMPLATE**. The sequence of **FREF** and **FTEMPLATE** was switched.
CONTACT_DETAILS	The sub-elements **PHONE** und **FAX** may occure more than once, due to their type-attribute.
CONTACT_ID	The maximum length has been extended from 50 characters to 60 characters.
CONTACT_IDREF	The maximum length has been extended from 50 characters to 60 characters.
DOCUMENT_CREATOR_IDREF	New element
EXEMPTION_REASON	New element
FEATURE	The sub-element **CLASSIFICATION_FEATURE_REF** was renamed to **FREF**. The sub-element **CLASSIFICATION_SYSTEM_FEATURE_TEMPLATE** was replaced with the fully identical element **FTEMPLATE**. The sub-element **FREF** was replaced with the fully identical element **FT_IDREF**.
FEATURE_CONTENT	The sub-element **FT_DOMAIN_VALUES** was renamed to **FT_VALUES**.

Copyright © 2022 BME e.V. - BMEcat® Version 2005.2
Copyright © 2010-2021 BME e.V. - BMEcat® Version 2005.1
Copyright © 2005-2009 BME e.V. - BMEcat® Version 2005
Copyright © 1998–2004 Fraunhofer IAO, Stuttgart; Universität Essen BLI - BMEcat® Version 1.2

Change	Description of changes
FORMULA_SOURCE	The sub-element **SOURCE_DESCR** was renamed to **SOURCE_NAME**.
FREF	This element was named **CLASSIFICATION_FEATURE_REF** in BMEcat 2005 final draft, now it is named **FREF**.
FTEMPLATE	New element
FT_DATATYPE =class_instance_ type	New value
FT_DATATYPE =currency	New value
FT_DATATYPE =named_type	New value
FT_DEPENDENCIES	New element
FT_GROUP_IDREF	New element
FT_GROUP_NAME	New element
FT_SOURCE	The sub-element **SOURCE_DESCR** was renamed to **SOURCE_NAME**.
FT_VALUE	This element was named **FT_DOMAIN_VALUE** in BMEcat 2005 final draft, now it is named **FT_VALUE**.
FT_VALUES	This element was named **FT_DOMAIN_VALUES** and is now named **FT_VALUES**. The sub-element **FT_DOMAIN_VALUE** was renamed to **FT_VALUE**.
GROUP_PRODUCT_ORDER	This element was named **CLASSIFICATION_GROUP_PRODUCTORDER** in BMEcat 2005 final draft, now it is named **GROUP_PRODUCT_ORDER**.
HEADER	The sub-element was renamed to **LEGAL_INFO**. The sub-element **DOCUMENT_CREATOR_IDREF** was added.
IPP_OUTBOUND_PARAMS	The sub-element **IPP_CLASSIFICATION_INFO** was removed.
JURISDICTION	New element
LEGAL_INFO	This element was named **LEGAL_INFORMATION** and is now named **LEGAL_INFO**. The sub-element **AREA_LEGAL_INFORMATION** was renamed to **AREA_LEGAL_INFO**.
NO_CU_PER_OU	A default value was added.
PACKING_UNIT	The sub element **QUANTITY_INTERVAL** was renamed to **QUANTITY_MAX**.
PARAMETER_DEFINITION	The sub-element **CLASSIFICATION_FEATURE_REF** was renamed to **FREF**.
PARAMETER_UNIT	The maximum length has been reduced from 600 characters to 60 characters.
PRICE_FACTOR	A default value was added.
PRICE_QUANTITY	A default value was added.
PRICE_UNIT_FACTOR	A default value was added.
PRODUCT in context T_NEW_CATALOG	The sub-element **PRODUCT_MODULES**which had been added in BMEcat 2005 final draft, was removed again.
PRODUCT in context T_UPDATE_PRODUCTS	The sub-element **PRODUCT_MODULES**which had been added in BMEcat 2005 final draft, was removed again.
PRODUCT_CONTACTS	The sub-element **CONTACT_IDREF** may occur more than once.
PRODUCT_FEATURES	The sub-element **CLASSIFICATION_GROUP_PRODUCTORDER** was renamed in **GROUP_PRODUCT_ORDER**.

Copyright © 2022 BME e.V. - BMEcat® Version 2005.2
Copyright © 2010-2021 BME e.V. - BMEcat® Version 2005.1
Copyright © 2005-2009 BME e.V. - BMEcat® Version 2005
Copyright © 1998–2004 Fraunhofer IAO, Stuttgart; Universität Essen BLI - BMEcat® Version 1.2

Change	Description of changes
PRODUCT_LOGISTIC_DETAILS	This element was extended by the new **STATISTICS_FACTOR** element. The sub-elements **TRANSPORT** and **MEANS_OF_TRANSPORT** were set to multiple.
PRODUCT_PRICE	This element has been extended by the sub-element **TAX_DETAILS**.
PRODUCT_REFERENCE	This element was extended by the sub-element **MIME_INFO**.
PRODUCT_REFERENCE -->type =mandatory	This value was erased in version 2005fd by accident and was reinserted in version 2005.
QUANTITY_INTERVAL	A default value was added.
QUANTITY_MIN	A default value was added.
SOURCE_NAME	This element was named **SOURCE_DESCR** in Version 2005 final draft, now it is named **SOURCE_NAME**. The maximum length has been reduced from 250 characters to 80 characters.
STATISTICS_FACTOR	New element
SUB_TIME_SPANS	The new sub-element **TIME_VALUE_DURATION** was added.
SUPPLIER_PID	The type-attribute was added to this element.
TAX_CATEGORY	New element
TAX_DETAILS	New element
TAX_TYPE	New element
TIME_BASE	The list of allowed values for this element was extended by the value 'dayofmonth'.
TIME_BASE =dayofmonth	New value
TIME_SPAN	The new sub-element **TIME_VALUE_DURATION** was added.
TIME_VALUE_DURATION	New element
TIME_VALUE_INTERVAL	The semantics of this element was changed.
T_NEW_CATALOG	The sub-elements **PARTIES** and **AREAS** were moved to **HEADER**. The **MODULES** element, which had been added in BMEcat 2005 final draft, was removed again.
T_UPDATE_PRICES	The sub-elements **PARTIES** and **AREAS** were moved to **HEADER**.
T_UPDATE_PRODUCTS	The sub-elements **PARTIES** and **AREAS** were moved to **HEADER**. The **MODULES** element, which had been added in BMEcat 2005 final draft, was removed again.
UNIT_DESCR	The maximum length has been extended from 250 characters to 16000 characters.

Copyright © 2022 BME e.V. - BMEcat® Version 2005.2
Copyright © 2010-2021 BME e.V. - BMEcat® Version 2005.1
Copyright © 2005-2009 BME e.V. - BMEcat® Version 2005
Copyright © 1998–2004 Fraunhofer IAO, Stuttgart; Universität Essen BLI - BMEcat® Version 1.2

History of changes Version 2005.1

Change	Description of changes
BMECAT -->version =2005.1	New value
CATALOG	New sub element **LOCALE** added
FEATURE	The sub-elements **ID**, **PARENT_ID** and **FEATURE** were added.
FEATURE_GROUP	New element
FEATURE_GROUP --> featureGroupType	New attribute
FEATURE_GROUP_DESCRIPTION	New element
FEATURE_GROUP_DESCRIPTION -->lang	New attribut
FEATURE_GROUP_DESCRIPTION -->locale	New attribut
FEATURE_GROUP_NAME	New element
FID	New Element
FPARENT_ID	New element
LOCALE	New element
dtLOCALE	New data type
dtMLSTRING	New attribute "locale" for more precise designation of the used language additionally considering scripts, regions and variants of languages was added.

Copyright © 2022 BME e.V. - BMEcat® Version 2005.2
Copyright © 2010-2021 BME e.V. - BMEcat® Version 2005.1
Copyright © 2005-2009 BME e.V. - BMEcat® Version 2005
Copyright © 1998–2004 Fraunhofer IAO, Stuttgart; Universität Essen BLI - BMEcat® Version 1.2

History of changes Version 2005.2

Change	Description of changes
BMECAT -->version =2005.2	New value
FEATURE	The sub-elements **FVALUE** und **VALUE_IDREF** can be used both at the same time and without a bounded occurence.
FEATURE_GROUP --> featureGroupType	Extension of the documentation.
FNAME	The field length was increased to 80 characters, as standard classification systems have longer feature names.
FVALUE	The length of the field value is not restricted anymore, as standard classification systems define the lenght of feature values.
LOCALE	The documentation was updated and refined.
MIME_TYPE	The type definition was changed, so that all allowed MIME typs are allowed values.
dtCURRENCIES	The currency code list was updated to ISO 4217:2015. Deprecated currencies codes were kept to ensue downward compatibility.
dtLOCALE	The documentation was updated and refined.
dtMLSTRING	Extended the documentation of the attributes

Copyright © 2022 BME e.V. - BMEcat® Version 2005.2
Copyright © 2010-2021 BME e.V. - BMEcat® Version 2005.1
Copyright © 2005-2009 BME e.V. - BMEcat® Version 2005
Copyright © 1998–2004 Fraunhofer IAO, Stuttgart; Universität Essen BLI - BMEcat® Version 1.2

Overview of elements - order by appearance

Amount	Element name	Default value	Data type	Field length	Lang. specific	l.chg. in ver.
1	**BMECAT**	-	-	-	-	-
1	|_ SEQUENCE	-	-	-	-	-
1	| |_ **HEADER**	-	-	-	-	2005
1	| | |_ SEQUENCE	-	-	-	-	-
0..1	| | | |_ **GENERATOR_INFO**	-	**dtSTRING**	250	-	-
1	| | | |_ **CATALOG**	-	-	-	-	2005.1
1	| | | | |_ SEQUENCE	-	-	-	-	-
1	| | | | | |_ CHOICE	-	-	-	-	-
1..*	| | | | | | |_ **LANGUAGE**	-	**dtLANG**	-	-	-
1..*	| | | | | | |_ **LOCALE**	-	**dtLOCALE**	-	-	2005.1
1	| | | | | |_ **CATALOG_ID**	-	**dtSTRING**	20	-	-
1	| | | | | |_ **CATALOG_VERSION**	-	**dtSTRING**	7	-	1.2_fd
0..1	| | | | | |_ **CATALOG_NAME**	-	**dtMLSTRING**	100	Yes	-
0..1	| | | | | |_ CHOICE	-	-	-	-	-
0..1	| | | | | | |_ **GENERATION_DATE**	-	**dtDATETIME**	-	-	2005fd
0..1	| | | | | | |_ **DATETIME** in the context of PRODUCT_PRICE_DETAILS	-	-	-	-	-
1	| | | | | | | |_ SEQUENCE	-	-	-	-	-
1	| | | | | | | | |_ **DATE**	-	**dtDATETYPE**	-	-	-
0..1	| | | | | | | | |_ **TIME**	-	**dtTIMETYPE**	-	-	-
0..1	| | | | | | | | |_ **TIMEZONE**	-	**dtTIMEZONETYPE**	-	-	-
0..1	| | | | | |_ CHOICE	-	-	-	-	-
0..*	| | | | | | |_ **TERRITORY**	-	**dtCOUNTRIES**	-	-	1.2_fd
0..1	| | | | | | |_ **AREA_REFS**	-	-	-	-	2005fd
1	| | | | | | | |_ SEQUENCE	-	-	-	-	-
1..*	| | | | | | | | |_ **AREA_IDREF**	-	**dtSTRING**	60	-	2005fd
0..1	| | | | | |_ **CURRENCY**	-	**dtCURRENCIES**	-	-	2005.2
0..1	| | | | | |_ **MIME_ROOT**	-	**dtMLSTRING**	250	Yes	-
0..*	| | | | | |_ **PRICE_FLAG**	-	**dtBOOLEAN**	-	-	-
0..1	| | | | | |_ **PRICE_FACTOR**	1	**dtNUMBER**	-	-	2005
0..1	| | | | | |_ **VALID_START_DATE**	-	**dtDATETIME**	-	-	2005fd
0..1	| | | | | |_ **VALID_END_DATE**	-	**dtDATETIME**	-	-	2005fd
0..1	| | | | | |_ **PRODUCT_TYPE**	-	**dtSTRING**	50	-	2005fd
0..1	| | | | | |_ **COUNTRY_OF_ORIGIN**	-	**dtCOUNTRIES**	-	-	2005fd
0..*	| | | | | |_ **DELIVERY_TIMES**	-	-	-	-	2005fd
1	| | | | | | |_ SEQUENCE	-	-	-	-	-
0..1	| | | | | | | |_ CHOICE	-	-	-	-	-
0..*	| | | | | | | | |_ **TERRITORY**	-	**dtCOUNTRIES**	-	-	1.2_fd
0..1	| | | | | | | | |_ **AREA_REFS**	-	-	-	-	2005fd
1	| | | | | | | | | |_ SEQUENCE	-	-	-	-	-
1..*	| | | | | | | | | | |_ **AREA_IDREF**	-	**dtSTRING**	60	-	2005fd
1..*	| | | | | | | |_ **TIME_SPAN**	-	-	-	-	2005
1	| | | | | | | | |_ SEQUENCE	-	-	-	-	-

Copyright © 2022 BME e.V. - BMEcat® Version 2005.2
Copyright © 2010-2021 BME e.V. - BMEcat® Version 2005.1
Copyright © 2005-2009 BME e.V. - BMEcat® Version 2005
Copyright © 1998–2004 Fraunhofer IAO, Stuttgart; Universität Essen BLI - BMEcat® Version 1.2

Amount	Element name	Default value	Data type	Field length	Lang. specific	l.chg. in ver.
1	| | | | | | | | | |_ **TIME_BASE**	-	**dtSTRING**	20	-	2005
0..1	| | | | | | | | | |_ **TIME_VALUE_DURATION**	-	**dtSTRING**	20	-	2005
0..1	| | | | | | | | | |_ **TIME_VALUE_INTERVAL**	1	**dtSTRING**	20	-	2005
0..1	| | | | | | | | | |_ **TIME_VALUE_START**	-	**dtSTRING**	50	-	2005fd
0..1	| | | | | | | | | |_ **TIME_VALUE_END**	-	**dtSTRING**	50	-	2005fd
0..*	| | | | | | | | | |_ **SUB_TIME_SPANS**	-	-	-	-	2005
1	| | | | | | | | | | |_ SEQUENCE	-	-	-	-	-
1	| | | | | | | | | | | |_ **TIME_BASE**	-	**dtSTRING**	20	-	2005
0..1	| | | | | | | | | | | |_ **TIME_VALUE_DURATION**	-	**dtSTRING**	20	-	2005
0..1	| | | | | | | | | | | |_ **TIME_VALUE_INTERVAL**	1	**dtSTRING**	20	-	2005
0..1	| | | | | | | | | | | |_ **TIME_VALUE_START**	-	**dtSTRING**	50	-	2005fd
0..1	| | | | | | | | | | | |_ **TIME_VALUE_END**	-	**dtSTRING**	50	-	2005fd
0..*	| | | | | | | | | | | |_ **SUB_TIME_SPANS**	-	-	-	-	2005
0..1	| | | | | | | |_ **LEADTIME**	-	**dtFLOAT**	-	-	2005fd
0..1	| | | | | |_ **TRANSPORT**	-	-	-	-	2005fd
1	| | | | | | |_ SEQUENCE	-	-	-	-	-
1	| | | | | | | |_ **INCOTERM**	-	**dtSTRING**	3	-	2005fd
0..1	| | | | | | | |_ **LOCATION**	-	**dtSTRING**	250	-	2005fd
0..1	| | | | | | | |_ **TRANSPORT_REMARK**	-	**dtMLSTRING**	64000	Yes	2005fd
0..1	| | | | | |_ **SUPPLIER_IDREF**	-	**dtSTRING**	250	-	2005fd
0..1	| | | |_ CHOICE	-	-	-	-	-
0..1	| | | | |_ **BUYER_IDREF**	-	**dtSTRING**	250	-	2005fd
0..1	| | | | |_ **BUYER**	-	-	-	-	-
1	| | | | | |_ SEQUENCE	-	-	-	-	-
0..1	| | | | | | |_ **BUYER_ID**	-	**dtSTRING**	250	-	2005fd
1	| | | | | | |_ **BUYER_NAME**	-	**dtSTRING**	50	-	-
0..1	| | | | | | |_ **ADDRESS** in context BUYER	-	-	-	-	2005
1	| | | | | | | |_ SEQUENCE	-	-	-	-	-
0..1	| | | | | | | | |_ **NAME**	-	**dtMLSTRING**	50	Yes	-
0..1	| | | | | | | | |_ **NAME2**	-	**dtMLSTRING**	50	Yes	-
0..1	| | | | | | | | |_ **NAME3**	-	**dtMLSTRING**	50	Yes	-
0..1	| | | | | | | | |_ **DEPARTMENT**	-	**dtMLSTRING**	50	Yes	2005fd
0..1	| | | | | | | | |_ CHOICE	-	-	-	-	-
0..*	| | | | | | | | | |_ **CONTACT_DETAILS**	-	-	-	-	2005
1	| | | | | | | | | | |_ SEQUENCE	-	-	-	-	-
1	| | | | | | | | | | | |_ **CONTACT_ID**	-	**dtSTRING**	60	-	2005
1	| | | | | | | | | | | |_ **CONTACT_NAME**	-	**dtMLSTRING**	50	Yes	2005fd
0..1	| | | | | | | | | | | |_ **FIRST_NAME**	-	**dtMLSTRING**	50	Yes	-
0..1	| | | | | | | | | | | |_ **TITLE**	-	**dtMLSTRING**	20	Yes	2005fd
0..1	| | | | | | | | | | | |_ **ACADEMIC_TITLE**	-	**dtMLSTRING**	50	Yes	2005fd
0..1	| | | | | | | | | | | |_ **CONTACT_ROLE**	-	**dtMLSTRING**	50	Yes	2005fd
0..1	| | | | | | | | | | | |_ **CONTACT_DESCR**	-	**dtMLSTRING**	250	Yes	2005fd
0..1	| | | | | | | | | | | |_ **PHONE**	-	**dtMLSTRING**	50	Yes	2005fd
0..1	| | | | | | | | | | | |_ **FAX**	-	**dtMLSTRING**	50	Yes	-
0..1	| | | | | | | | | | | |_ **URL**	-	**dtSTRING**	255	-	2005fd

Copyright © 2022 BME e.V. - BMEcat® Version 2005.2
Copyright © 2010-2021 BME e.V. - BMEcat® Version 2005.1
Copyright © 2005-2009 BME e.V. - BMEcat® Version 2005
Copyright © 1998–2004 Fraunhofer IAO, Stuttgart; Universität Essen BLI - BMEcat® Version 1.2

Amount	Element name	Default value	Data type	Field length	Lang. specific	l.chg. in ver.
0..1	| | | | | | | | | | | |_ **EMAILS**	-	-	-	-	2005fd
1..*	| | | | | | | | | | | | |_ SEQUENCE	-	-	-	-	-
1	| | | | | | | | | | | | | |_ **EMAIL**	-	**dtSTRING**	255	-	2005fd
0..*	| | | | | | | | | | | | | |_ **PUBLIC_KEY**	-	**dtSTRING**	64000	-	1.2_fd
0..1	| | | | | | | | | | |_ **CONTACT**	-	**dtMLSTRING**	50	Yes	-
0..1	| | | | | | | | | |_ **STREET**	-	**dtMLSTRING**	50	Yes	-
0..1	| | | | | | | | | |_ **ZIP**	-	**dtMLSTRING**	20	Yes	-
0..1	| | | | | | | | | |_ **BOXNO**	-	**dtMLSTRING**	20	Yes	-
0..1	| | | | | | | | | |_ **ZIPBOX**	-	**dtMLSTRING**	20	Yes	-
0..1	| | | | | | | | | |_ **CITY**	-	**dtMLSTRING**	50	Yes	-
0..1	| | | | | | | | | |_ **STATE**	-	**dtMLSTRING**	50	Yes	-
0..1	| | | | | | | | | |_ **COUNTRY**	-	**dtMLSTRING**	50	Yes	-
0..1	| | | | | | | | | |_ **COUNTRY_CODED**	-	**dtCOUNTRIES**	-	-	2005fd
0..1	| | | | | | | | | |_ **VAT_ID**	-	**dtSTRING**	50	-	2005fd
0..1	| | | | | | | | | |_ **PHONE**	-	**dtMLSTRING**	50	Yes	2005fd
0..1	| | | | | | | | | |_ **FAX**	-	**dtMLSTRING**	50	Yes	-
0..*	| | | | | | | | | |_ SEQUENCE	-	-	-	-	-
1	| | | | | | | | | | |_ **EMAIL**	-	**dtSTRING**	255	-	2005fd
0..*	| | | | | | | | | | |_ **PUBLIC_KEY**	-	**dtSTRING**	64000	-	1.2_fd
0..1	| | | | | | | | | |_ **URL**	-	**dtSTRING**	255	-	2005fd
0..1	| | | | | | | | | |_ **ADDRESS_REMARKS**	-	**dtMLSTRING**	250	Yes	-
0..1	| | | |_ CHOICE	-	-	-	-	-
0..*	| | | | |_ **AGREEMENT**	-	-	-	-	2005fd
1	| | | | | |_ SEQUENCE	-	-	-	-	-
1	| | | | | | |_ **AGREEMENT_ID**	-	**dtSTRING**	50	-	-
0..1	| | | | | | |_ **AGREEMENT_LINE_ID**	-	**dtSTRING**	50	-	2005fd
1	| | | | | | |_ CHOICE	-	-	-	-	-
1	| | | | | | | |_ SEQUENCE	-	-	-	-	-
0..1	| | | | | | | | |_ **AGREEMENT_START_DATE**	-	**dtDATETIME**	-	-	2005fd
1	| | | | | | | | |_ **AGREEMENT_END_DATE**	-	**dtDATETIME**	-	-	2005fd
1..2	| | | | | | | |_ **DATETIME** in the context of AGREEMENT	-	-	-	-	-
1	| | | | | | | | |_ SEQUENCE	-	-	-	-	-
1	| | | | | | | | | |_ **DATE**	-	**dtDATETYPE**	-	-	-
0..1	| | | | | | | | | |_ **TIME**	-	**dtTIMETYPE**	-	-	-
0..1	| | | | | | | | | |_ **TIMEZONE**	-	**dtTIMEZONETYPE**	-	-	-
0..1	| | | | | | |_ **SUPPLIER_IDREF**	-	**dtSTRING**	250	-	2005fd
0..1	| | | | | | |_ **AGREEMENT_DESCR**	-	**dtSTRING**	250	-	2005fd
0..1	| | | | | | |_ **MIME_INFO**	-	-	-	-	-
1	| | | | | | | |_ SEQUENCE	-	-	-	-	-
1..*	| | | | | | | | |_ **MIME**	-	-	-	-	-
1	| | | | | | | | | |_ SEQUENCE	-	-	-	-	-
0..1	| | | | | | | | | | |_ **MIME_TYPE**	-	**dtSTRING**	100	-	2005.2
1	| | | | | | | | | | |_ **MIME_SOURCE**	-	**dtMLSTRING**	255	Yes	-
0..1	| | | | | | | | | | |_ **MIME_DESCR**	-	**dtMLSTRING**	250	Yes	-
0..1	| | | | | | | | | | |_ **MIME_ALT**	-	**dtMLSTRING**	80	Yes	2005fd

Copyright © 2022 BME e.V. - BMEcat® Version 2005.2
Copyright © 2010-2021 BME e.V. - BMEcat® Version 2005.1
Copyright © 2005-2009 BME e.V. - BMEcat® Version 2005
Copyright © 1998–2004 Fraunhofer IAO, Stuttgart; Universität Essen BLI - BMEcat® Version 1.2

Amount	Element name	Default value	Data type	Field length	Lang. specific	l.chg. in ver.
0..1	| | | | | | | | | | |_ **MIME_PURPOSE**	-	**dtSTRING**	20	-	2005fd
0..1	| | | | | | | | | | |_ **MIME_ORDER**	-	**dtINTEGER**	-	-	-
0..1	| | | | |_ **LEGAL_INFO**	-	-	-	-	2005
1	| | | | | |_ SEQUENCE	-	-	-	-	-
1..*	| | | | | | |_ **AREA_LEGAL_INFO**	-	-	-	-	2005
1	| | | | | | | |_ SEQUENCE	-	-	-	-	-
0..1	| | | | | | | | |_ CHOICE	-	-	-	-	-
0..*	| | | | | | | | | |_ **TERRITORY**	-	**dtCOUNTRIES**	-	-	1.2_fd
0..1	| | | | | | | | | |_ **AREA_REFS**	-	-	-	-	2005fd
1	| | | | | | | | | | |_ SEQUENCE	-	-	-	-	-
1..*	| | | | | | | | | | | |_ **AREA_IDREF**	-	**dtSTRING**	60	-	2005fd
0..1	| | | | | | | | |_ **LEGAL_TEXT**	-	**dtMLSTRING**	64000	Yes	2005fd
0..1	| | | | | | | | |_ **MIME_INFO**	-	-	-	-	-
1	| | | | | | | | | |_ SEQUENCE	-	-	-	-	-
1..*	| | | | | | | | | | |_ **MIME**	-	-	-	-	-
1	| | | | | | | | | | | |_ SEQUENCE	-	-	-	-	-
0..1	| | | | | | | | | | | | |_ **MIME_TYPE**	-	**dtSTRING**	100	-	2005.2
1	| | | | | | | | | | | | |_ **MIME_SOURCE**	-	**dtMLSTRING**	255	Yes	-
0..1	| | | | | | | | | | | | |_ **MIME_DESCR**	-	**dtMLSTRING**	250	Yes	-
0..1	| | | | | | | | | | | | |_ **MIME_ALT**	-	**dtMLSTRING**	80	Yes	2005fd
0..1	| | | | | | | | | | | | |_ **MIME_PURPOSE**	-	**dtSTRING**	20	-	2005fd
0..1	| | | | | | | | | | | | |_ **MIME_ORDER**	-	**dtINTEGER**	-	-	-
1	| | | |_ CHOICE	-	-	-	-	-
1	| | | | |_ **SUPPLIER_IDREF**	-	**dtSTRING**	250	-	2005fd
1	| | | | |_ **SUPPLIER**	-	-	-	-	-
1	| | | | | |_ SEQUENCE	-	-	-	-	-
0..*	| | | | | | |_ **SUPPLIER_ID**	-	**dtSTRING**	250	-	2005fd
1	| | | | | | |_ **SUPPLIER_NAME**	-	**dtSTRING**	50	-	-
0..1	| | | | | | |_ **ADDRESS** in context SUPPLIER	-	-	-	-	2005
1	| | | | | | | |_ SEQUENCE	-	-	-	-	-
0..1	| | | | | | | | |_ **NAME**	-	**dtMLSTRING**	50	Yes	-
0..1	| | | | | | | | |_ **NAME2**	-	**dtMLSTRING**	50	Yes	-
0..1	| | | | | | | | |_ **NAME3**	-	**dtMLSTRING**	50	Yes	-
0..1	| | | | | | | | |_ **DEPARTMENT**	-	**dtMLSTRING**	50	Yes	2005fd
0..1	| | | | | | | | |_ CHOICE	-	-	-	-	-
0..*	| | | | | | | | | |_ **CONTACT_DETAILS**	-	-	-	-	2005
1	| | | | | | | | | | |_ SEQUENCE	-	-	-	-	-
1	| | | | | | | | | | | |_ **CONTACT_ID**	-	**dtSTRING**	60	-	2005
1	| | | | | | | | | | | |_ **CONTACT_NAME**	-	**dtMLSTRING**	50	Yes	2005fd
0..1	| | | | | | | | | | | |_ **FIRST_NAME**	-	**dtMLSTRING**	50	Yes	-
0..1	| | | | | | | | | | | |_ **TITLE**	-	**dtMLSTRING**	20	Yes	2005fd
0..1	| | | | | | | | | | | |_ **ACADEMIC_TITLE**	-	**dtMLSTRING**	50	Yes	2005fd
0..1	| | | | | | | | | | | |_ **CONTACT_ROLE**	-	**dtMLSTRING**	50	Yes	2005fd
0..1	| | | | | | | | | | | |_ **CONTACT_DESCR**	-	**dtMLSTRING**	250	Yes	2005fd
0..1	| | | | | | | | | | | |_ **PHONE**	-	**dtMLSTRING**	50	Yes	2005fd

Copyright © 2022 BME e.V. - BMEcat® Version 2005.2
Copyright © 2010-2021 BME e.V. - BMEcat® Version 2005.1
Copyright © 2005-2009 BME e.V. - BMEcat® Version 2005
Copyright © 1998–2004 Fraunhofer IAO, Stuttgart; Universität Essen BLI - BMEcat® Version 1.2

Amount	Element name	Default value	Data type	Field length	Lang. specific	l.chg. in ver.
0..1	| | | | | | | | | | | |_ **FAX**	-	**dtMLSTRING**	50	Yes	-
0..1	| | | | | | | | | | | |_ **URL**	-	**dtSTRING**	255	-	2005fd
0..1	| | | | | | | | | | | |_ **EMAILS**	-	-	-	-	2005fd
1..*	| | | | | | | | | | | | |_ SEQUENCE	-	-	-	-	-
1	| | | | | | | | | | | | | |_ **EMAIL**	-	**dtSTRING**	255	-	2005fd
0..*	| | | | | | | | | | | | | |_ **PUBLIC_KEY**	-	**dtSTRING**	64000	-	1.2_fd
0..1	| | | | | | | | | |_ **CONTACT**	-	**dtMLSTRING**	50	Yes	-
0..1	| | | | | | | | |_ **STREET**	-	**dtMLSTRING**	50	Yes	-
0..1	| | | | | | | | |_ **ZIP**	-	**dtMLSTRING**	20	Yes	-
0..1	| | | | | | | | |_ **BOXNO**	-	**dtMLSTRING**	20	Yes	-
0..1	| | | | | | | | |_ **ZIPBOX**	-	**dtMLSTRING**	20	Yes	-
0..1	| | | | | | | | |_ **CITY**	-	**dtMLSTRING**	50	Yes	-
0..1	| | | | | | | | |_ **STATE**	-	**dtMLSTRING**	50	Yes	-
0..1	| | | | | | | | |_ **COUNTRY**	-	**dtMLSTRING**	50	Yes	-
0..1	| | | | | | | | |_ **COUNTRY_CODED**	-	**dtCOUNTRIES**	-	-	2005fd
0..1	| | | | | | | | |_ **VAT_ID**	-	**dtSTRING**	50	-	2005fd
0..1	| | | | | | | | |_ **PHONE**	-	**dtMLSTRING**	50	Yes	2005fd
0..1	| | | | | | | | |_ **FAX**	-	**dtMLSTRING**	50	Yes	-
0..*	| | | | | | | | |_ SEQUENCE	-	-	-	-	-
1	| | | | | | | | | |_ **EMAIL**	-	**dtSTRING**	255	-	2005fd
0..*	| | | | | | | | | |_ **PUBLIC_KEY**	-	**dtSTRING**	64000	-	1.2_fd
0..1	| | | | | | | | | |_ **URL**	-	**dtSTRING**	255	-	2005fd
0..1	| | | | | | | | | |_ **ADDRESS_REMARKS**	-	**dtMLSTRING**	250	Yes	-
0..1	| | | | | | |_ **MIME_INFO**	-	-	-	-	-
1	| | | | | | | |_ SEQUENCE	-	-	-	-	-
1..*	| | | | | | | | |_ **MIME**	-	-	-	-	-
1	| | | | | | | | | |_ SEQUENCE	-	-	-	-	-
0..1	| | | | | | | | | | |_ **MIME_TYPE**	-	**dtSTRING**	100	-	2005.2
1	| | | | | | | | | | |_ **MIME_SOURCE**	-	**dtMLSTRING**	255	Yes	-
0..1	| | | | | | | | | | |_ **MIME_DESCR**	-	**dtMLSTRING**	250	Yes	-
0..1	| | | | | | | | | | |_ **MIME_ALT**	-	**dtMLSTRING**	80	Yes	2005fd
0..1	| | | | | | | | | | |_ **MIME_PURPOSE**	-	**dtSTRING**	20	-	2005fd
0..1	| | | | | | | | | | |_ **MIME_ORDER**	-	**dtINTEGER**	-	-	-
1	| | | |_ **DOCUMENT_CREATOR_IDREF**	-	**dtSTRING**	250	-	2005
0..1	| | |_ **PARTIES**	-	-	-	-	2005fd
1	| | | |_ SEQUENCE	-	-	-	-	-
1..*	| | | | |_ **PARTY**	-	-	-	-	2005fd
1	| | | | | |_ SEQUENCE	-	-	-	-	-
0..*	| | | | | | |_ **PARTY_ID**	-	**dtSTRING**	250	-	2005fd
0..*	| | | | | | |_ **PARTY_ROLE**	-	**dtSTRING**	20	-	2005fd
0..1	| | | | | | |_ **ADDRESS**	-	-	-	-	2005
1	| | | | | | | |_ SEQUENCE	-	-	-	-	-
0..1	| | | | | | | | |_ **NAME**	-	**dtMLSTRING**	50	Yes	-
0..1	| | | | | | | | |_ **NAME2**	-	**dtMLSTRING**	50	Yes	-
0..1	| | | | | | | | |_ **NAME3**	-	**dtMLSTRING**	50	Yes	-

Copyright © 2022 BME e.V. - BMEcat® Version 2005.2
Copyright © 2010-2021 BME e.V. - BMEcat® Version 2005.1
Copyright © 2005-2009 BME e.V. - BMEcat® Version 2005
Copyright © 1998–2004 Fraunhofer IAO, Stuttgart; Universität Essen BLI - BMEcat® Version 1.2

Amount	Element name	Default value	Data type	Field length	Lang. specific	l.chg. in ver.
0..1	| | | | | | | | | |_ **DEPARTMENT**	-	**dtMLSTRING**	50	Yes	2005fd
0..1	| | | | | | | | | |_ CHOICE	-	-	-	-	-
0..*	| | | | | | | | | |_ **CONTACT_DETAILS**	-	-	-	-	2005
1	| | | | | | | | | | |_ SEQUENCE	-	-	-	-	-
1	| | | | | | | | | | | |_ **CONTACT_ID**	-	**dtSTRING**	60	-	2005
1	| | | | | | | | | | | |_ **CONTACT_NAME**	-	**dtMLSTRING**	50	Yes	2005fd
0..1	| | | | | | | | | | | |_ **FIRST_NAME**	-	**dtMLSTRING**	50	Yes	-
0..1	| | | | | | | | | | | |_ **TITLE**	-	**dtMLSTRING**	20	Yes	2005fd
0..1	| | | | | | | | | | | |_ **ACADEMIC_TITLE**	-	**dtMLSTRING**	50	Yes	2005fd
0..1	| | | | | | | | | | | |_ **CONTACT_ROLE**	-	**dtMLSTRING**	50	Yes	2005fd
0..1	| | | | | | | | | | | |_ **CONTACT_DESCR**	-	**dtMLSTRING**	250	Yes	2005fd
0..1	| | | | | | | | | | | |_ **PHONE**	-	**dtMLSTRING**	50	Yes	2005fd
0..1	| | | | | | | | | | | |_ **FAX**	-	**dtMLSTRING**	50	Yes	-
0..1	| | | | | | | | | | | |_ **URL**	-	**dtSTRING**	255	-	2005fd
0..1	| | | | | | | | | | | |_ **EMAILS**	-	-	-	-	2005fd
1..*	| | | | | | | | | | | | |_ SEQUENCE	-	-	-	-	-
1	| | | | | | | | | | | | | |_ **EMAIL**	-	**dtSTRING**	255	-	2005fd
0..*	| | | | | | | | | | | | | |_ **PUBLIC_KEY**	-	**dtSTRING**	64000	-	1.2_fd
0..1	| | | | | | | | | | |_ **CONTACT**	-	**dtMLSTRING**	50	Yes	-
0..1	| | | | | | | | | | |_ **STREET**	-	**dtMLSTRING**	50	Yes	-
0..1	| | | | | | | | | | |_ **ZIP**	-	**dtMLSTRING**	20	Yes	-
0..1	| | | | | | | | | | |_ **BOXNO**	-	**dtMLSTRING**	20	Yes	-
0..1	| | | | | | | | | | |_ **ZIPBOX**	-	**dtMLSTRING**	20	Yes	-
0..1	| | | | | | | | | | |_ **CITY**	-	**dtMLSTRING**	50	Yes	-
0..1	| | | | | | | | | | |_ **STATE**	-	**dtMLSTRING**	50	Yes	-
0..1	| | | | | | | | | | |_ **COUNTRY**	-	**dtMLSTRING**	50	Yes	-
0..1	| | | | | | | | | | |_ **COUNTRY_CODED**	-	**dtCOUNTRIES**	-	-	2005fd
0..1	| | | | | | | | | | |_ **VAT_ID**	-	**dtSTRING**	50	-	2005fd
0..1	| | | | | | | | | | |_ **PHONE**	-	**dtMLSTRING**	50	Yes	2005fd
0..1	| | | | | | | | | | |_ **FAX**	-	**dtMLSTRING**	50	Yes	-
0..*	| | | | | | | | | | |_ SEQUENCE	-	-	-	-	-
1	| | | | | | | | | | | |_ **EMAIL**	-	**dtSTRING**	255	-	2005fd
0..*	| | | | | | | | | | | |_ **PUBLIC_KEY**	-	**dtSTRING**	64000	-	1.2_fd
0..1	| | | | | | | | | | | |_ **URL**	-	**dtSTRING**	255	-	2005fd
0..1	| | | | | | | | | | | |_ **ADDRESS_REMARKS**	-	**dtMLSTRING**	250	Yes	-
0..1	| | | | | | | | |_ **MIME_INFO**	-	-	-	-	-
1	| | | | | | | | | |_ SEQUENCE	-	-	-	-	-
1..*	| | | | | | | | | | |_ **MIME**	-	-	-	-	-
1	| | | | | | | | | | | |_ SEQUENCE	-	-	-	-	-
0..1	| | | | | | | | | | | | |_ **MIME_TYPE**	-	**dtSTRING**	100	-	2005.2
1	| | | | | | | | | | | | |_ **MIME_SOURCE**	-	**dtMLSTRING**	255	Yes	-
0..1	| | | | | | | | | | | | |_ **MIME_DESCR**	-	**dtMLSTRING**	250	Yes	-
0..1	| | | | | | | | | | | | |_ **MIME_ALT**	-	**dtMLSTRING**	80	Yes	2005fd
0..1	| | | | | | | | | | | | |_ **MIME_PURPOSE**	-	**dtSTRING**	20	-	2005fd
0..1	| | | | | | | | | | | | |_ **MIME_ORDER**	-	**dtINTEGER**	-	-	-

Copyright © 2022 BME e.V. - BMEcat® Version 2005.2
Copyright © 2010-2021 BME e.V. - BMEcat® Version 2005.1
Copyright © 2005-2009 BME e.V. - BMEcat® Version 2005
Copyright © 1998–2004 Fraunhofer IAO, Stuttgart; Universität Essen BLI - BMEcat® Version 1.2

Amount	Element name	Default value	Data type	Field length	Lang. specific	l.chg. in ver.
0..1	| | | |_ **AREAS**	-	-	-	-	2005fd
1	| | | | |_ SEQUENCE	-	-	-	-	-
1..*	| | | | | |_ **AREA**	-	-	-	-	2005fd
1	| | | | | | |_ SEQUENCE	-	-	-	-	-
1	| | | | | | | |_ **AREA_ID**	-	**dtSTRING**	60	-	2005fd
0..1	| | | | | | | |_ **AREA_NAME**	-	**dtMLSTRING**	100	Yes	2005fd
0..1	| | | | | | | |_ **AREA_DESCR**	-	**dtMLSTRING**	250	Yes	2005fd
1	| | | | | | | |_ **TERRITORIES**	-	-	-	-	2005fd
1	| | | | | | | | |_ SEQUENCE	-	-	-	-	-
1..*	| | | | | | | | | |_ **TERRITORY**	-	**dtCOUNTRIES**	-	-	1.2_fd
0..1	| | | |_ **USER_DEFINED_EXTENSIONS**in context CATALOG_STRUCTURE	-	**udxHEADER**	-	-	-
1	| |_ CHOICE	-	-	-	-	-
1	| | |_ **T_NEW_CATALOG**	-	-	-	-	2005
1	| | | |_ SEQUENCE	-	-	-	-	-
X	| | | | |_ **FEATURE_SYSTEM**	-	-	-	-	-
0..*	| | | | |_ **CLASSIFICATION_SYSTEM**	-	-	-	-	2005
1	| | | | | |_ SEQUENCE	-	-	-	-	-
1	| | | | | | |_ **CLASSIFICATION_SYSTEM_NAME**	-	**dtSTRING**	80	-	2005fd
0..1	| | | | | | |_ **CLASSIFICATION_SYSTEM_FULLNAME**	-	**dtMLSTRING**	80	Yes	2005fd
0..1	| | | | | | |_ CHOICE	-	-	-	-	-
0..1	| | | | | | | |_ **CLASSIFICATION_SYSTEM_VERSION_DETAILS**	-	-	-	-	2005fd
1	| | | | | | | | |_ SEQUENCE	-	-	-	-	-
1	| | | | | | | | | |_ **VERSION**	-	**dtSTRING**	20	-	2005fd
0..1	| | | | | | | | | |_ **VERSION_DATE**	-	**dtDATETIME**	-	-	2005fd
0..1	| | | | | | | | | |_ **REVISION**	-	**dtSTRING**	20	-	2005fd
0..1	| | | | | | | | | |_ **REVISION_DATE**	-	**dtDATETIME**	-	-	2005fd
0..1	| | | | | | | | | |_ **ORIGINAL_DATE**	-	**dtDATETIME**	-	-	2005fd
0..1	| | | | | | | |_ **CLASSIFICATION_SYSTEM_VERSION**	-	**dtSTRING**	20	-	-
0..1	| | | | | | |_ **CLASSIFICATION_SYSTEM_DESCR**	-	**dtMLSTRING**	16000	Yes	2005fd
0..1	| | | | | | |_ **CLASSIFICATION_SYSTEM_PARTY_IDREF**	-	**dtSTRING**	250	-	2005fd
0..1	| | | | | | |_ **CLASSIFICATION_SYSTEM_LEVELS**	-	**dtINTEGER**	-	-	-
0..1	| | | | | | |_ **CLASSIFICATION_SYSTEM_LEVEL_NAMES**	-	-	-	-	-
1	| | | | | | | |_ SEQUENCE	-	-	-	-	-
1	| | | | | | | | |_ **CLASSIFICATION_SYSTEM_LEVEL_NAME**	-	**dtMLSTRING**	80	Yes	2005
0..1	| | | | | | |_ **CLASSIFICATION_SYSTEM_TYPE**	-	-	-	-	2005fd
1	| | | | | | | |_ SEQUENCE	-	-	-	-	-
0..1	| | | | | | | | |_ **GROUPID_HIERARCHY**	-	**dtBOOLEAN**	-	-	2005fd
0..1	| | | | | | | | |_ **MAPPING_TYPE**	-	**dtSTRING**	20	-	2005fd
0..1	| | | | | | | | |_ **MAPPING_LEVEL**	-	**dtSTRING**	20	-	2005fd
0..1	| | | | | | | | |_ **BALANCEDTREE**	-	**dtBOOLEAN**	-	-	2005fd
0..1	| | | | | | | | |_ **INHERITANCE**	-	**dtBOOLEAN**	-	-	2005fd
0..1	| | | | | | |_ **ALLOWED_VALUES**	-	-	-	-	-
1	| | | | | | | |_ SEQUENCE	-	-	-	-	-
1..*	| | | | | | | | |_ **ALLOWED_VALUE**	-	-	-	-	2005fd
1	| | | | | | | | | |_ SEQUENCE	-	-	-	-	-

Copyright © 2022 BME e.V. - BMEcat® Version 2005.2
Copyright © 2010-2021 BME e.V. - BMEcat® Version 2005.1
Copyright © 2005-2009 BME e.V. - BMEcat® Version 2005
Copyright © 1998–2004 Fraunhofer IAO, Stuttgart; Universität Essen BLI - BMEcat® Version 1.2

Amount	Element name	Default value	Data type	Field length	Lang. specific	l.chg. in ver.
1	| | | | | | | | | | |_ **ALLOWED_VALUE_ID**	-	**dtSTRING**	60	-	-
1	| | | | | | | | | | |_ **ALLOWED_VALUE_NAME**	-	**dtMLSTRING**	80	Yes	2005fd
0..1	| | | | | | | | | | |_ **ALLOWED_VALUE_VERSION**	-	-	-	-	2005fd
1	| | | | | | | | | | | |_ SEQUENCE	-	-	-	-	-
1	| | | | | | | | | | | | |_ **VERSION**	-	**dtSTRING**	20	-	2005fd
0..1	| | | | | | | | | | | | |_ **VERSION_DATE**	-	**dtDATETIME**	-	-	2005fd
0..1	| | | | | | | | | | | | |_ **REVISION**	-	**dtSTRING**	20	-	2005fd
0..1	| | | | | | | | | | | | |_ **REVISION_DATE**	-	**dtDATETIME**	-	-	2005fd
0..1	| | | | | | | | | | | | |_ **ORIGINAL_DATE**	-	**dtDATETIME**	-	-	2005fd
0..1	| | | | | | | | | | |_ **ALLOWED_VALUE_SHORTNAME**	-	**dtMLSTRING**	80	Yes	2005fd
0..1	| | | | | | | | | | |_ **ALLOWED_VALUE_DESCR**	-	**dtMLSTRING**	250	Yes	-
0..1	| | | | | | | | | | |_ **ALLOWED_VALUE_SYNONYMS**	-	-	-	-	2005fd
1	| | | | | | | | | | | |_ SEQUENCE	-	-	-	-	-
1	| | | | | | | | | | | | |_ **SYNONYM**	-	**dtMLSTRING**	80	Yes	2005fd
0..1	| | | | | | | | | | |_ **ALLOWED_VALUE_SOURCE**	-	-	-	-	2005
1	| | | | | | | | | | | |_ SEQUENCE	-	-	-	-	-
0..1	| | | | | | | | | | | | |_ **SOURCE_NAME**	-	**dtMLSTRING**	80	Yes	2005
0..1	| | | | | | | | | | | | |_ **SOURCE_URI**	-	**dtSTRING**	255	-	2005fd
0..1	| | | | | | | | | | | | |_ **PARTY_IDREF**	-	**dtSTRING**	250	-	2005fd
0..1	| | | | | | |_ **UNITS**	-	-	-	-	-
1	| | | | | | | |_ SEQUENCE	-	-	-	-	-
1..*	| | | | | | | | |_ **UNIT**	-	-	-	-	2005fd
1	| | | | | | | | | |_ SEQUENCE	-	-	-	-	-
1	| | | | | | | | | | |_ **UNIT_ID**	-	**dtSTRING**	60	-	-
0..1	| | | | | | | | | | |_ **UNIT_NAME**	-	**dtMLSTRING**	80	Yes	2005fd
0..1	| | | | | | | | | | |_ **UNIT_SHORTNAME**	-	**dtMLSTRING**	80	Yes	2005fd
0..1	| | | | | | | | | | |_ **UNIT_DESCR**	-	**dtMLSTRING**	16000	Yes	2005
0..1	| | | | | | | | | | |_ **UNIT_CODE**	-	**dtSTRING**	20	-	2005fd
0..1	| | | | | | | | | | |_ **UNIT_URI**	-	**dtSTRING**	255	-	2005fd
0..1	| | | | | | |_ **FT_GROUPS**	-	-	-	-	2005fd
1	| | | | | | | |_ SEQUENCE	-	-	-	-	-
1..*	| | | | | | | | |_ **FT_GROUP**	-	-	-	-	2005fd
1	| | | | | | | | | |_ SEQUENCE	-	-	-	-	-
1	| | | | | | | | | | |_ **FT_GROUP_ID**	-	**dtSTRING**	60	-	2005fd
0..1	| | | | | | | | | | |_ **FT_GROUP_NAME**	-	**dtMLSTRING**	80	Yes	2005
0..1	| | | | | | | | | | |_ **FT_GROUP_DESCR**	-	**dtMLSTRING**	250	Yes	2005fd
0..*	| | | | | | | | | | |_ **FT_GROUP_PARENT_ID**	-	**dtSTRING**	60	-	2005fd
0..1	| | | | | | |_ **CLASSIFICATION_SYSTEM_FEATURE_TEMPLATES**	-	-	-	-	-
1	| | | | | | | |_ SEQUENCE	-	-	-	-	-
1..*	| | | | | | | | |_ **CLASSIFICATION_SYSTEM_FEATURE_TEMPLATE**	-	-	-	-	2005
1	| | | | | | | | | |_ SEQUENCE	-	-	-	-	-
1	| | | | | | | | | | |_ **FT_ID**	-	**dtSTRING**	60	-	-
1	| | | | | | | | | | |_ **FT_NAME**	-	**dtMLSTRING**	80	Yes	2005fd
0..1	| | | | | | | | | | |_ **FT_SHORTNAME**	-	**dtMLSTRING**	80	Yes	2005fd
0..1	| | | | | | | | | | |_ **FT_DESCR**	-	**dtMLSTRING**	16000	Yes	2005fd

Copyright © 2022 BME e.V. - BMEcat® Version 2005.2
Copyright © 2010-2021 BME e.V. - BMEcat® Version 2005.1
Copyright © 2005-2009 BME e.V. - BMEcat® Version 2005
Copyright © 1998–2004 Fraunhofer IAO, Stuttgart; Universität Essen BLI - BMEcat® Version 1.2

Amount	Element name	Default value	Data type	Field length	Lang. specific	l.chg. in ver.
0..1	| | | | | | | | | | |_ **FT_VERSION**	-	-	-	-	2005fd
1	| | | | | | | | | | | |_ SEQUENCE	-	-	-	-	-
1	| | | | | | | | | | | | |_ **VERSION**	-	**dtSTRING**	20	-	2005fd
0..1	| | | | | | | | | | | | |_ **VERSION_DATE**	-	**dtDATETIME**	-	-	2005fd
0..1	| | | | | | | | | | | | |_ **REVISION**	-	**dtSTRING**	20	-	2005fd
0..1	| | | | | | | | | | | | |_ **REVISION_DATE**	-	**dtDATETIME**	-	-	2005fd
0..1	| | | | | | | | | | | | |_ **ORIGINAL_DATE**	-	**dtDATETIME**	-	-	2005fd
0..1	| | | | | | | | | | |_ CHOICE	-	-	-	-	-
0..1	| | | | | | | | | | | |_ **FT_GROUP_IDREF**	-	**dtSTRING**	60	-	2005
0..1	| | | | | | | | | | | |_ **FT_GROUP_NAME**	-	**dtMLSTRING**	80	Yes	2005
0..1	| | | | | | | | | | |_ **FT_DEPENDENCIES**	-	-	-	-	2005
1	| | | | | | | | | | | |_ SEQUENCE	-	-	-	-	-
1..*	| | | | | | | | | | | | |_ **FT_IDREF**	-	**dtSTRING**	60	-	-
0..1	| | | | | | | | | | |_ **FEATURE_CONTENT**	-	-	-	-	2005
1	| | | | | | | | | | | |_ SEQUENCE	-	-	-	-	-
1	| | | | | | | | | | | | |_ **FT_DATATYPE**	-	**dtSTRING**	20	-	-
0..1	| | | | | | | | | | | | |_ **FT_FACETS**	-	-	-	-	2005fd
1	| | | | | | | | | | | | | |_ SEQUENCE	-	-	-	-	-
1..4	| | | | | | | | | | | | | | |_ **FT_FACET**	-	**dtSTRING**	20	-	2005fd
0..1	| | | | | | | | | | | | |_ **FT_VALUES**	-	-	-	-	2005
1	| | | | | | | | | | | | | |_ SEQUENCE	-	-	-	-	-
1..*	| | | | | | | | | | | | | | |_ **FT_VALUE**	-	-	-	-	2005
1	| | | | | | | | | | | | | | |_ SEQUENCE	-	-	-	-	-
1	| | | | | | | | | | | | | | | |_ CHOICE	-	-	-	-	-
1	| | | | | | | | | | | | | | | | |_ **VALUE_IDREF**	-	**dtSTRING**	60	-	2005fd
1	| | | | | | | | | | | | | | | | |_ **VALUE_SIMPLE**	-	**dtSTRING**	80	-	2005fd
1	| | | | | | | | | | | | | | | | |_ **VALUE_TEXT**	-	**dtMLSTRING**	80	Yes	2005fd
1	| | | | | | | | | | | | | | | | |_ **VALUE_RANGE**	-	-	-	-	2005fd
1	| | | | | | | | | | | | | | | | | |_ SEQUENCE	-	-	-	-	-
1	| | | | | | | | | | | | | | | | | | |_ **STARTVALUE**	-	**dtNUMBER**	-	-	2005fd
1	| | | | | | | | | | | | | | | | | | |_ **ENDVALUE**	-	**dtNUMBER**	-	-	2005fd
0..1	| | | | | | | | | | | | | | | | | | |_ **INTERVALVALUE**	-	**dtNUMBER**	-	-	2005fd
0..1	| | | | | | | | | | | | | | | |_ **MIME_INFO**	-	-	-	-	-
1	| | | | | | | | | | | | | | | | |_ SEQUENCE	-	-	-	-	-
1..*	| | | | | | | | | | | | | | | | | |_ **MIME**	-	-	-	-	-
1	| | | | | | | | | | | | | | | | | | |_ SEQUENCE	-	-	-	-	-
0..1	| | | | | | | | | | | | | | | | | | | |_ **MIME_TYPE**	-	**dtSTRING**	100	-	2005.2
1	| | | | | | | | | | | | | | | | | | | |_ **MIME_SOURCE**	-	**dtMLSTRING**	255	Yes	-
0..1	| | | | | | | | | | | | | | | | | | | |_ **MIME_DESCR**	-	**dtMLSTRING**	250	Yes	-
0..1	| | | | | | | | | | | | | | | | | | | |_ **MIME_ALT**	-	**dtMLSTRING**	80	Yes	2005fd
0..1	| | | | | | | | | | | | | | | | | | | |_ **MIME_PURPOSE**	-	**dtSTRING**	20	-	2005fd
0..1	| | | | | | | | | | | | | | | | | | | |_ **MIME_ORDER**	-	**dtINTEGER**	-	-	-
0..1	| | | | | | | | | | | | | | | |_ **CONFIG_INFO**	-	-	-	-	2005fd
1	| | | | | | | | | | | | | | | | |_ SEQUENCE	-	-	-	-	-
1	| | | | | | | | | | | | | | | | | |_ **CONFIG_CODE**	-	**dtSTRING**	50	-	2005fd

Copyright © 2022 BME e.V. - BMEcat® Version 2005.2
Copyright © 2010-2021 BME e.V. - BMEcat® Version 2005.1
Copyright © 2005-2009 BME e.V. - BMEcat® Version 2005
Copyright © 1998–2004 Fraunhofer IAO, Stuttgart; Universität Essen BLI - BMEcat® Version 1.2

Amount	Element name	Default value	Data type	Field length	Lang. specific	l.chg. in ver.
0..1	|_ **PRODUCT_PRICE_DETAILS**	-	-	-	-	2005fd
1	|_ SEQUENCE	-	-	-	-	-
0..1	|_ CHOICE	-	-	-	-	-
0..1	|_ SEQUENCE	-	-	-	-	-
0..1	|_ **VALID_START_DATE**	-	**dtDATETIME**	-	-	2005fd
0..1	|_ **VALID_END_DATE**	-	**dtDATETIME**	-	-	2005fd
0..2	|_ **DATETIME** in the context of ARTICLE_PRICE_DETAILS	-	-	-	-	-
1	|_ SEQUENCE	-	-	-	-	-
1	|_ **DATE**	-	**dtDATETYPE**	-	-	-
0..1	|_ **TIME**	-	**dtTIMETYPE**	-	-	-
0..1	|_ **TIMEZONE**	-	**dtTIMEZONETYPE**	-	-	-
0..1	|_ **DAILY_PRICE**	-	**dtBOOLEAN**	-	-	-
1..*	|_ **PRODUCT_PRICE**	-	-	-	-	2005
1	|_ SEQUENCE	-	-	-	-	-
0..1	|_ CHOICE	-	-	-	-	-
0..1	|_ **PRICE_AMOUNT**	-	**dtNUMBER**	-	-	-
0..1	|_ **PRICE_FORMULA**	-	-	-	-	2005fd
1	|_ SEQUENCE	-	-	-	-	-
1	|_ **FORMULA_IDREF**	-	**dtSTRING**	60	-	2005fd
0..1	|_ **PARAMETERS**	-	-	-	-	2005fd
1	|_ SEQUENCE	-	-	-	-	-
1..*	|_ **PARAMETER**	-	-	-	-	2005fd
1	|_ SEQUENCE	-	-	-	-	-
1	|_ **PARAMETER_SYMBOLREF**	-	**dtSTRING**	60	-	2005fd
1	|_ **PARAMETER_VALUE**	-	**dtSTRING**	250	-	2005fd
0..1	|_ **PRICE_CURRENCY**	-	**dtCURRENCIES**	-	-	2005.2
0..1	|_ CHOICE	-	-	-	-	-
0..*	|_ **TAX_DETAILS**	-	-	-	-	2005
1	|_ SEQUENCE	-	-	-	-	-
0..1	|_ **CALCULATION_SEQUENCE**	1	**dtCOUNT**	-	-	2005fd
0..1	|_ **TAX_CATEGORY**	-	**dtSTRING**	80	-	2005
0..1	|_ **TAX_TYPE**	vat	**dtSTRING**	250	-	2005
0..1	|_ **TAX**	-	**dtNUMBER**	-	-	-
0..1	|_ **EXEMPTION_REASON**	-	**dtMLSTRING**	250	Yes	2005
0..1	|_ **JURISDICTION**	-	**dtMLSTRING**	250	Yes	2005
0..1	|_ **TAX**	-	**dtNUMBER**	-	-	-
0..1	|_ **PRICE_FACTOR**	1	**dtNUMBER**	-	-	2005
0..1	|_ **LOWER_BOUND**	-	**dtNUMBER**	-	-	-
0..1	|_ CHOICE	-	-	-	-	-
0..*	|_ **TERRITORY**	-	**dtCOUNTRIES**	-	-	1.2_fd
0..1	|_ **AREA_REFS**	-	-	-	-	2005fd
1	|_ SEQUENCE	-	-	-	-	-
1..*	|_ **AREA_IDREF**	-	**dtSTRING**	60	-	2005fd
0..1	|_ **PRICE_BASE**	-	-	-	-	2005fd
1	|_ SEQUENCE	-	-	-	-	-

Copyright © 2022 BME e.V. - BMEcat® Version 2005.2
Copyright © 2010-2021 BME e.V. - BMEcat® Version 2005.1
Copyright © 2005-2009 BME e.V. - BMEcat® Version 2005
Copyright © 1998–2004 Fraunhofer IAO, Stuttgart; Universität Essen BLI - BMEcat® Version 1.2

Amount	Element name	Default value	Data type	Field length	Lang. specific	l.chg. in ver.
1	|_ **PRICE_UNIT**	-	**dtPUNIT**	-	-	1.2_fd
0..1	|_ **PRICE_UNIT_FACTOR**	1	**dtFLOAT**	-	-	2005
0..*	|_ **PRICE_FLAG**	-	**dtBOOLEAN**	-	-	-
0..1	|_ **VALUE_ORDER**	-	**dtINTEGER**	-	-	2005fd
0..1	|_ **DEFAULT_FLAG**	-	**dtBOOLEAN**	-	-	2005fd
0..1	|_ **FT_VALENCY**	univalent	**dtSTRING**	20	-	2005fd
0..1	|_ CHOICE	-	-	-	-	-
0..1	|_ **FT_UNIT_IDREF**	-	**dtSTRING**	60	-	2005fd
0..1	|_ **FT_UNIT**	-	**dtSTRING**	80	-	2005fd
0..1	|_ **FT_MANDATORY**	-	**dtBOOLEAN**	-	-	-
0..1	|_ **FT_ORDER**	-	**dtINTEGER**	-	-	-
0..1	|_ **FT_SYMBOL**	-	**dtMLSTRING**	20	Yes	1.2
0..1	|_ **FT_SYNONYMS**	-	-	-	-	2005fd
1	|_ SEQUENCE	-	-	-	-	-
1	|_ **SYNONYM**	-	**dtMLSTRING**	80	Yes	2005fd
0..1	|_ **MIME_INFO**	-	-	-	-	-
1	|_ SEQUENCE	-	-	-	-	-
1..*	|_ **MIME**	-	-	-	-	-
1	|_ SEQUENCE	-	-	-	-	-
0..1	|_ **MIME_TYPE**	-	**dtSTRING**	100	-	2005.2
1	|_ **MIME_SOURCE**	-	**dtMLSTRING**	255	Yes	-
0..1	|_ **MIME_DESCR**	-	**dtMLSTRING**	250	Yes	-
0..1	|_ **MIME_ALT**	-	**dtMLSTRING**	80	Yes	2005fd
0..1	|_ **MIME_PURPOSE**	-	**dtSTRING**	20	-	2005fd
0..1	|_ **MIME_ORDER**	-	**dtINTEGER**	-	-	-
0..1	|_ **FT_SOURCE**	-	-	-	-	2005
1	|_ SEQUENCE	-	-	-	-	-
0..1	|_ **SOURCE_NAME**	-	**dtMLSTRING**	80	Yes	2005
0..1	|_ **SOURCE_URI**	-	**dtSTRING**	255	-	2005fd
0..1	|_ **PARTY_IDREF**	-	**dtSTRING**	250	-	2005fd
0..1	|_ **FT_NOTE**	-	**dtMLSTRING**	16000	Yes	2005fd
0..1	|_ **FT_REMARK**	-	**dtMLSTRING**	16000	Yes	2005fd
0..1	|_ **CLASSIFICATION_GROUPS**	-	-	-	-	-
1	|_ SEQUENCE	-	-	-	-	-
1..*	|_ **CLASSIFICATION_GROUP**	-	-	-	-	2005
1	|_ SEQUENCE	-	-	-	-	-
1	|_ **CLASSIFICATION_GROUP_ID**	-	**dtSTRING**	60	-	-
0..1	|_ **CLASSIFICATION_GROUP_ID2**	-	**dtSTRING**	60	-	2005fd
0..1	|_ **CLASSIFICATION_GROUP_VERSION**	-	-	-	-	2005fd
1	|_ SEQUENCE	-	-	-	-	-
1	|_ **VERSION**	-	**dtSTRING**	20	-	2005fd
0..1	|_ **VERSION_DATE**	-	**dtDATETIME**	-	-	2005fd
0..1	|_ **REVISION**	-	**dtSTRING**	20	-	2005fd
0..1	|_ **REVISION_DATE**	-	**dtDATETIME**	-	-	2005fd
0..1	|_ **ORIGINAL_DATE**	-	**dtDATETIME**	-	-	2005fd

Copyright © 2022 BME e.V. - BMEcat® Version 2005.2
Copyright © 2010-2021 BME e.V. - BMEcat® Version 2005.1
Copyright © 2005-2009 BME e.V. - BMEcat® Version 2005
Copyright © 1998–2004 Fraunhofer IAO, Stuttgart; Universität Essen BLI - BMEcat® Version 1.2

Amount	Element name	Default value	Data type	Field length	Lang. specific	l.chg. in ver.
1	| | | | | | | | | | |_ **CLASSIFICATION_GROUP_NAME**	-	**dtMLSTRING**	250	Yes	2005fd
0..1	| | | | | | | | | | |_ **CLASSIFICATION_GROUP_SHORTNAME**	-	**dtMLSTRING**	80	Yes	2005fd
0..1	| | | | | | | | | | |_ **CLASSIFICATION_GROUP_DESCR**	-	**dtMLSTRING**	16000	Yes	2005fd
0..1	| | | | | | | | | | |_ **CLASSIFICATION_GROUP_SOURCE**	-	-	-	-	2005
1	| | | | | | | | | | | |_ SEQUENCE	-	-	-	-	-
0..1	| | | | | | | | | | | | |_ **SOURCE_NAME**	-	**dtMLSTRING**	80	Yes	2005
0..1	| | | | | | | | | | | | |_ **SOURCE_URI**	-	**dtSTRING**	255	-	2005fd
0..1	| | | | | | | | | | | | |_ **PARTY_IDREF**	-	**dtSTRING**	250	-	2005fd
0..1	| | | | | | | | | | |_ **CLASSIFICATION_GROUP_NOTE**	-	**dtMLSTRING**	16000	Yes	2005fd
0..1	| | | | | | | | | | |_ **CLASSIFICATION_GROUP_REMARK**	-	**dtMLSTRING**	16000	Yes	2005fd
0..1	| | | | | | | | | | |_ **CLASSIFICATION_GROUP_CONTACTS**	-	-	-	-	2005
1	| | | | | | | | | | | |_ SEQUENCE	-	-	-	-	-
1	| | | | | | | | | | | | |_ **PARTY_IDREF**	-	**dtSTRING**	250	-	2005fd
1..*	| | | | | | | | | | | | |_ **CONTACT_IDREF**	-	**dtSTRING**	60	-	2005
0..1	| | | | | | | | | | |_ **CLASSIFICATION_GROUP_ORDER**	-	**dtINTEGER**	-	-	2005fd
0..1	| | | | | | | | | | |_ **MIME_INFO**	-	-	-	-	-
1	| | | | | | | | | | | |_ SEQUENCE	-	-	-	-	-
1..*	| | | | | | | | | | | | |_ **MIME**	-	-	-	-	-
1	| | | | | | | | | | | | | |_ SEQUENCE	-	-	-	-	-
0..1	| | | | | | | | | | | | | | |_ **MIME_TYPE**	-	**dtSTRING**	100	-	2005.2
1	| | | | | | | | | | | | | | |_ **MIME_SOURCE**	-	**dtMLSTRING**	255	Yes	-
0..1	| | | | | | | | | | | | | | |_ **MIME_DESCR**	-	**dtMLSTRING**	250	Yes	-
0..1	| | | | | | | | | | | | | | |_ **MIME_ALT**	-	**dtMLSTRING**	80	Yes	2005fd
0..1	| | | | | | | | | | | | | | |_ **MIME_PURPOSE**	-	**dtSTRING**	20	-	2005fd
0..1	| | | | | | | | | | | | | | |_ **MIME_ORDER**	-	**dtINTEGER**	-	-	-
0..1	| | | | | | | | | | |_ **CLASSIFICATION_GROUP_SYNONYMS**	-	-	-	-	-
1	| | | | | | | | | | | |_ SEQUENCE	-	-	-	-	-
1	| | | | | | | | | | | | |_ **SYNONYM**	-	**dtMLSTRING**	80	Yes	2005fd
0..1	| | | | | | | | | | |_ **CLASSIFICATION_GROUP_FEATURE_TEMPLATES**	-	-	-	-	-
1	| | | | | | | | | | | |_ SEQUENCE	-	-	-	-	-
1..*	| | | | | | | | | | | | |_ **CLASSIFICATION_GROUP_FEATURE_TEMPLATE**	-	-	-	-	2005
1	| | | | | | | | | | | | | |_ SEQUENCE	-	-	-	-	-
1	| | | | | | | | | | | | | | |_ **FT_IDREF**	-	**dtSTRING**	60	-	-
0..1	| | | | | | | | | | | | | | |_ **FT_MANDATORY**	-	**dtBOOLEAN**	-	-	-
0..1	| | | | | | | | | | | | | | |_ **FT_DATATYPE**	-	**dtSTRING**	20	-	-
0..1	| | | | | | | | | | | | | | |_ CHOICE	-	-	-	-	-
0..1	| | | | | | | | | | | | | | | |_ **FT_UNIT_IDREF**	-	**dtSTRING**	60	-	2005fd
0..1	| | | | | | | | | | | | | | | |_ **FT_UNIT**	-	**dtSTRING**	80	-	2005fd
0..1	| | | | | | | | | | | | | | |_ **FT_ORDER**	-	**dtINTEGER**	-	-	-
0..1	| | | | | | | | | | | | | | |_ CHOICE	-	-	-	-	-
0..1	| | | | | | | | | | | | | | | |_ **FT_ALLOWED_VALUES**	-	-	-	-	-
1	| | | | | | | | | | | | | | | | |_ SEQUENCE	-	-	-	-	-
1..*	| | | | | | | | | | | | | | | | | |_ **ALLOWED_VALUE_IDREF**	-	**dtSTRING**	60	-	-
0..1	| | | | | | | | | | | | | | | |_ **FT_VALUES**	-	-	-	-	2005
1	| | | | | | | | | | | | | | | | |_ SEQUENCE	-	-	-	-	-

Copyright © 2022 BME e.V. - BMEcat® Version 2005.2
Copyright © 2010-2021 BME e.V. - BMEcat® Version 2005.1
Copyright © 2005-2009 BME e.V. - BMEcat® Version 2005
Copyright © 1998–2004 Fraunhofer IAO, Stuttgart; Universität Essen BLI - BMEcat® Version 1.2

Amount	Element name	Default value	Data type	Field length	Lang. specific	l.chg. in ver.
1..*	| | | | | | | | | | | | | | | | | | |_ **FT_VALUE**	-	-	-	-	2005
1	| | | | | | | | | | | | | | | | | | | |_ SEQUENCE	-	-	-	-	-
1	| | | | | | | | | | | | | | | | | | | | |_ CHOICE	-	-	-	-	-
1	| | | | | | | | | | | | | | | | | | | | | |_ **VALUE_IDREF**	-	**dtSTRING**	60	-	2005fd
1	| | | | | | | | | | | | | | | | | | | | | |_ **VALUE_SIMPLE**	-	**dtSTRING**	80	-	2005fd
1	| | | | | | | | | | | | | | | | | | | | | |_ **VALUE_TEXT**	-	**dtMLSTRING**	80	Yes	2005fd
1	| | | | | | | | | | | | | | | | | | | | | |_ **VALUE_RANGE**	-	-	-	-	2005fd
1	| | | | | | | | | | | | | | | | | | | | | | |_ SEQUENCE	-	-	-	-	-
1	| | | | | | | | | | | | | | | | | | | | | | | |_ **STARTVALUE**	-	**dtNUMBER**	-	-	2005fd
1	| | | | | | | | | | | | | | | | | | | | | | | |_ **ENDVALUE**	-	**dtNUMBER**	-	-	2005fd
0..1	| | | | | | | | | | | | | | | | | | | | | | | |_ **INTERVALVALUE**	-	**dtNUMBER**	-	-	2005fd
0..1	| | | | | | | | | | | | | | | | | | | | | |_ **MIME_INFO**	-	-	-	-	-
1	| | | | | | | | | | | | | | | | | | | | | |_ SEQUENCE	-	-	-	-	-
1..*	| | | | | | | | | | | | | | | | | | | | | |_ **MIME**	-	-	-	-	-
1	| | | | | | | | | | | | | | | | | | | | | | |_ SEQUENCE	-	-	-	-	-
0..1	| | | | | | | | | | | | | | | | | | | | | | | |_ **MIME_TYPE**	-	**dtSTRING**	100	-	2005.2
1	| | | | | | | | | | | | | | | | | | | | | | | |_ **MIME_SOURCE**	-	**dtMLSTRING**	255	Yes	-
0..1	| | | | | | | | | | | | | | | | | | | | | | | |_ **MIME_DESCR**	-	**dtMLSTRING**	250	Yes	-
0..1	| | | | | | | | | | | | | | | | | | | | | | | |_ **MIME_ALT**	-	**dtMLSTRING**	80	Yes	2005fd
0..1	| | | | | | | | | | | | | | | | | | | | | | | |_ **MIME_PURPOSE**	-	**dtSTRING**	20	-	2005fd
0..1	| | | | | | | | | | | | | | | | | | | | | | | |_ **MIME_ORDER**	-	**dtINTEGER**	-	-	-
0..1	| | | | | | | | | | | | | | | | | | | | | |_ **CONFIG_INFO**	-	-	-	-	2005fd
1	| | | | | | | | | | | | | | | | | | | | | |_ SEQUENCE	-	-	-	-	-
1	| | | | | | | | | | | | | | | | | | | | | | |_ **CONFIG_CODE**	-	**dtSTRING**	50	-	2005fd
0..1	| | | | | | | | | | | | | | | | | | | | | | |_ **PRODUCT_PRICE_DETAILS**	-	-	-	-	2005fd
1	| | | | | | | | | | | | | | | | | | | | | | | |_ SEQUENCE	-	-	-	-	-
0..1	| | | | | | | | | | | | | | | | | | | | | | | | |_ CHOICE	-	-	-	-	-
0..1	| | | | | | | | | | | | | | | | | | | | | | | | | |_ SEQUENCE	-	-	-	-	-
0..1	| | | | | | | | | | | | | | | | | | | | | | | | | | |_ **VALID_START_DATE**	-	**dtDATETIME**	-	-	2005fd
0..1	| | | | | | | | | | | | | | | | | | | | | | | | | | |_ **VALID_END_DATE**	-	**dtDATETIME**	-	-	2005fd
0..2	| | | | | | | | | | | | | | | | | | | | | | | | | |_ **DATETIME** in the context of ARTICLE_PRICE_DETAILS	-	-	-	-	-
1	| | | | | | | | | | | | | | | | | | | | | | | | | | |_ SEQUENCE	-	-	-	-	-
1	| | | | | | | | | | | | | | | | | | | | | | | | | | | |_ **DATE**	-	**dtDATETYPE**	-	-	-
0..1	| | | | | | | | | | | | | | | | | | | | | | | | | | | |_ **TIME**	-	**dtTIMETYPE**	-	-	-
0..1	| | | | | | | | | | | | | | | | | | | | | | | | | | | |_ **TIMEZONE**	-	**dtTIMEZONETYPE**	-	-	-
0..1	| | | | | | | | | | | | | | | | | | | | | | | |_ **DAILY_PRICE**	-	**dtBOOLEAN**	-	-	-
1..*	| | | | | | | | | | | | | | | | | | | | | | | |_ **PRODUCT_PRICE**	-	-	-	-	2005
1	| | | | | | | | | | | | | | | | | | | | | | | | |_ SEQUENCE	-	-	-	-	-
0..1	| | | | | | | | | | | | | | | | | | | | | | | | |_ CHOICE	-	-	-	-	-
0..1	| | | | | | | | | | | | | | | | | | | | | | | | | |_ **PRICE_AMOUNT**	-	**dtNUMBER**	-	-	-
0..1	| | | | | | | | | | | | | | | | | | | | | | | | | |_ **PRICE_FORMULA**	-	-	-	-	2005fd
1	| | | | | | | | | | | | | | | | | | | | | | | | | | |_ SEQUENCE	-	-	-	-	-
1	| | | | | | | | | | | | | | | | | | | | | | | | | | | |_ **FORMULA_IDREF**	-	**dtSTRING**	60	-	2005fd
0..1	| | | | | | | | | | | | | | | | | | | | | | | | | | | |_ **PARAMETERS**	-	-	-	-	2005fd
1	| | | | | | | | | | | | | | | | | | | | | | | | | | | | |_ SEQUENCE	-	-	-	-	-

Copyright © 2022 BME e.V. - BMEcat® Version 2005.2
Copyright © 2010-2021 BME e.V. - BMEcat® Version 2005.1
Copyright © 2005-2009 BME e.V. - BMEcat® Version 2005
Copyright © 1998–2004 Fraunhofer IAO, Stuttgart; Universität Essen BLI - BMEcat® Version 1.2

Amount	Element name	Default value	Data type	Field length	Lang. specific	l.chg. in ver.
1..*	|_ **PARAMETER**	-	-	-	-	2005fd
1	|_ SEQUENCE	-	-	-	-	-
1	|_ **PARAMETER_SYMBOLREF**	-	**dtSTRING**	60	-	2005fd
1	|_ **PARAMETER_VALUE**	-	**dtSTRING**	250	-	2005fd
0..1	|_ **PRICE_CURRENCY**	-	**dtCURRENCIES**	-	-	2005.2
0..1	|_ CHOICE	-	-	-	-	-
0..*	|_ **TAX_DETAILS**	-	-	-	-	2005
1	|_ SEQUENCE	-	-	-	-	-
0..1	|_ **CALCULATION_SEQUENCE**	1	**dtCOUNT**	-	-	2005fd
0..1	|_ **TAX_CATEGORY**	-	**dtSTRING**	80	-	2005
0..1	|_ **TAX_TYPE**	vat	**dtSTRING**	250	-	2005
0..1	|_ **TAX**	-	**dtNUMBER**	-	-	-
0..1	|_ **EXEMPTION_REASON**	-	**dtMLSTRING**	250	Yes	2005
0..1	|_ **JURISDICTION**	-	**dtMLSTRING**	250	Yes	2005
0..1	|_ **TAX**	-	**dtNUMBER**	-	-	-
0..1	|_ **PRICE_FACTOR**	1	**dtNUMBER**	-	-	2005
0..1	|_ **LOWER_BOUND**	-	**dtNUMBER**	-	-	-
0..1	|_ CHOICE	-	-	-	-	-
0..*	|_ **TERRITORY**	-	**dtCOUNTRIES**	-	-	1.2_fd
0..1	|_ **AREA_REFS**	-	-	-	-	2005fd
1	|_ SEQUENCE	-	-	-	-	-
1..*	|_ **AREA_IDREF**	-	**dtSTRING**	60	-	2005fd
0..1	|_ **PRICE_BASE**	-	-	-	-	2005fd
1	|_ SEQUENCE	-	-	-	-	-
1	|_ **PRICE_UNIT**	-	**dtPUNIT**	-	-	1.2_fd
0..1	|_ **PRICE_UNIT_FACTOR**	1	**dtFLOAT**	-	-	2005
0..*	|_ **PRICE_FLAG**	-	**dtBOOLEAN**	-	-	-
0..1	|_ **VALUE_ORDER**	-	**dtINTEGER**	-	-	2005fd
0..1	|_ **DEFAULT_FLAG**	-	**dtBOOLEAN**	-	-	2005fd
0..1	|_ **FT_VALENCY**	univalent	**dtSTRING**	20	-	2005fd
0..1	|_ **FT_SYMBOL**	-	**dtMLSTRING**	20	Yes	1.2
0..1	|_ **FT_SYNONYMS**	-	-	-	-	2005fd
1	|_ SEQUENCE	-	-	-	-	-
1	|_ **SYNONYM**	-	**dtMLSTRING**	80	Yes	2005fd
0..1	|_ **MIME_INFO**	-	-	-	-	-
1	|_ SEQUENCE	-	-	-	-	-
1..*	|_ **MIME**	-	-	-	-	-
1	|_ SEQUENCE	-	-	-	-	-
0..1	|_ **MIME_TYPE**	-	**dtSTRING**	100	-	2005.2
1	|_ **MIME_SOURCE**	-	**dtMLSTRING**	255	Yes	-
0..1	|_ **MIME_DESCR**	-	**dtMLSTRING**	250	Yes	-
0..1	|_ **MIME_ALT**	-	**dtMLSTRING**	80	Yes	2005fd
0..1	|_ **MIME_PURPOSE**	-	**dtSTRING**	20	-	2005fd
0..1	|_ **MIME_ORDER**	-	**dtINTEGER**	-	-	-
0..1	|_ **FT_SOURCE**	-	-	-	-	2005

Copyright © 2022 BME e.V. - BMEcat® Version 2005.2
Copyright © 2010-2021 BME e.V. - BMEcat® Version 2005.1
Copyright © 2005-2009 BME e.V. - BMEcat® Version 2005
Copyright © 1998–2004 Fraunhofer IAO, Stuttgart; Universität Essen BLI - BMEcat® Version 1.2

Amount	Element name	Default value	Data type	Field length	Lang. specific	l.chg. in ver.
1	| | | | | | | | | | | | | | |_ SEQUENCE	-	-	-	-	-
0..1	| | | | | | | | | | | | | | | |_ **SOURCE_NAME**	-	**dtMLSTRING**	80	Yes	2005
0..1	| | | | | | | | | | | | | | | |_ **SOURCE_URI**	-	**dtSTRING**	255	-	2005fd
0..1	| | | | | | | | | | | | | | | |_ **PARTY_IDREF**	-	**dtSTRING**	250	-	2005fd
0..1	| | | | | | | | | | | | | | |_ **FT_NOTE**	-	**dtMLSTRING**	16000	Yes	2005fd
0..1	| | | | | | | | | | | | | | |_ **FT_REMARK**	-	**dtMLSTRING**	16000	Yes	2005fd
0..1	| | | | | | | | | | | | | | |_ **FT_DEPENDENCIES**	-	-	-	-	2005
1	| | | | | | | | | | | | | | |_ SEQUENCE	-	-	-	-	-
1..*	| | | | | | | | | | | | | | |_ **FT_IDREF**	-	**dtSTRING**	60	-	-
0..1	| | | | | | | | | | |_ **CLASSIFICATION_GROUP_PARENT_ID**	-	**dtSTRING**	60	-	-
0..1	| | | | | | | | | | |_ **CLASSIFICATION_GROUP_UDX**	-	**udxCLASSGROUP**	-	-	2005fd
0..1	| | | | |_ **CATALOG_GROUP_SYSTEM**	-	-	-	-	-
1	| | | | | |_ SEQUENCE	-	-	-	-	-
0..1	| | | | | | |_ **GROUP_SYSTEM_ID**	-	**dtSTRING**	50	-	-
0..1	| | | | | | |_ **GROUP_SYSTEM_NAME**	-	**dtMLSTRING**	50	Yes	-
1..*	| | | | | | |_ **CATALOG_STRUCTURE**	-	-	-	-	-
1	| | | | | | | |_ SEQUENCE	-	-	-	-	-
1	| | | | | | | | |_ **GROUP_ID**	-	**dtSTRING**	50	-	-
1	| | | | | | | | |_ **GROUP_NAME**	-	**dtMLSTRING**	50	Yes	-
0..1	| | | | | | | | |_ **GROUP_DESCRIPTION**	-	**dtMLSTRING**	250	Yes	-
1	| | | | | | | | |_ **PARENT_ID**	-	**dtSTRING**	50	-	-
0..1	| | | | | | | | |_ **GROUP_ORDER**	-	**dtINTEGER**	-	-	-
0..1	| | | | | | | | |_ **MIME_INFO**	-	-	-	-	-
1	| | | | | | | | | |_ SEQUENCE	-	-	-	-	-
1..*	| | | | | | | | | |_ **MIME**	-	-	-	-	-
1	| | | | | | | | | | |_ SEQUENCE	-	-	-	-	-
0..1	| | | | | | | | | | | |_ **MIME_TYPE**	-	**dtSTRING**	100	-	2005.2
1	| | | | | | | | | | | |_ **MIME_SOURCE**	-	**dtMLSTRING**	255	Yes	-
0..1	| | | | | | | | | | | |_ **MIME_DESCR**	-	**dtMLSTRING**	250	Yes	-
0..1	| | | | | | | | | | | |_ **MIME_ALT**	-	**dtMLSTRING**	80	Yes	2005fd
0..1	| | | | | | | | | | | |_ **MIME_PURPOSE**	-	**dtSTRING**	20	-	2005fd
0..1	| | | | | | | | | | | |_ **MIME_ORDER**	-	**dtINTEGER**	-	-	-
0..1	| | | | | | | | |_ **USER_DEFINED_EXTENSIONS** in context HEADER	-	**udxCATALOGGROUP**	-	-	-
0..1	| | | | | | | | |_ **KEYWORD**	-	**dtMLSTRING**	50	Yes	-
0..1	| | | | | | |_ **GROUP_SYSTEM_DESCRIPTION**	-	**dtMLSTRING**	250	Yes	-
0..1	| | | | |_ **FORMULAS**	-	-	-	-	2005fd
1	| | | | | |_ SEQUENCE	-	-	-	-	-
1..*	| | | | | | |_ **FORMULA**	-	-	-	-	2005fd
1	| | | | | | | |_ SEQUENCE	-	-	-	-	-
1	| | | | | | | | |_ **FORMULA_ID**	-	**dtSTRING**	60	-	2005fd
0..1	| | | | | | | | |_ **FORMULA_VERSION**	-	-	-	-	2005fd
1	| | | | | | | | | |_ SEQUENCE	-	-	-	-	-
1	| | | | | | | | | | |_ **VERSION**	-	**dtSTRING**	20	-	2005fd
0..1	| | | | | | | | | | |_ **VERSION_DATE**	-	**dtDATETIME**	-	-	2005fd
0..1	| | | | | | | | | | |_ **REVISION**	-	**dtSTRING**	20	-	2005fd

Copyright © 2022 BME e.V. - BMEcat® Version 2005.2
Copyright © 2010-2021 BME e.V. - BMEcat® Version 2005.1
Copyright © 2005-2009 BME e.V. - BMEcat® Version 2005
Copyright © 1998–2004 Fraunhofer IAO, Stuttgart; Universität Essen BLI - BMEcat® Version 1.2

Amount	Element name	Default value	Data type	Field length	Lang. specific	l.chg. in ver.
0..1	| | | | | | | | | | |_ **REVISION_DATE**	-	**dtDATETIME**	-	-	2005fd
0..1	| | | | | | | | | | |_ **ORIGINAL_DATE**	-	**dtDATETIME**	-	-	2005fd
0..1	| | | | | | | | | |_ **FORMULA_NAME**	-	**dtMLSTRING**	100	Yes	2005fd
0..1	| | | | | | | | | |_ **FORMULA_DESCR**	-	**dtMLSTRING**	250	Yes	2005fd
0..1	| | | | | | | | | |_ **FORMULA_SOURCE**	-	-	-	-	2005
1	| | | | | | | | | |_ SEQUENCE	-	-	-	-	-
0..1	| | | | | | | | | | |_ **SOURCE_NAME**	-	**dtMLSTRING**	80	Yes	2005
0..1	| | | | | | | | | | |_ **SOURCE_URI**	-	**dtSTRING**	255	-	2005fd
0..1	| | | | | | | | | | |_ **PARTY_IDREF**	-	**dtSTRING**	250	-	2005fd
0..1	| | | | | | | | |_ **MIME_INFO**	-	-	-	-	-
1	| | | | | | | | | |_ SEQUENCE	-	-	-	-	-
1..*	| | | | | | | | | | |_ **MIME**	-	-	-	-	-
1	| | | | | | | | | | |_ SEQUENCE	-	-	-	-	-
0..1	| | | | | | | | | | | |_ **MIME_TYPE**	-	**dtSTRING**	100	-	2005.2
1	| | | | | | | | | | | |_ **MIME_SOURCE**	-	**dtMLSTRING**	255	Yes	-
0..1	| | | | | | | | | | | |_ **MIME_DESCR**	-	**dtMLSTRING**	250	Yes	-
0..1	| | | | | | | | | | | |_ **MIME_ALT**	-	**dtMLSTRING**	80	Yes	2005fd
0..1	| | | | | | | | | | | |_ **MIME_PURPOSE**	-	**dtSTRING**	20	-	2005fd
0..1	| | | | | | | | | | | |_ **MIME_ORDER**	-	**dtINTEGER**	-	-	-
0..1	| | | | | | | | |_ **FORMULA_FUNCTION**	-	-	-	-	2005fd
1	| | | | | | | | | |_ SEQUENCE	-	-	-	-	-
1..*	| | | | | | | | | | |_ **TERM**	-	-	-	-	2005fd
1	| | | | | | | | | | |_ SEQUENCE	-	-	-	-	-
1	| | | | | | | | | | |_ **TERM_ID**	-	**dtSTRING**	20	-	2005fd
0..1	| | | | | | | | | | |_ **TERM_CONDITION**	-	**dtSTRING**	3000	-	2005fd
1	| | | | | | | | | | |_ **TERM_EXPRESSION**	-	**dtSTRING**	3000	-	2005fd
1	| | | | | | | | |_ **PARAMETER_DEFINITIONS**	-	-	-	-	2005fd
1	| | | | | | | | |_ SEQUENCE	-	-	-	-	-
1..*	| | | | | | | | | |_ **PARAMETER_DEFINITION**	-	-	-	-	2005
1	| | | | | | | | | | |_ SEQUENCE	-	-	-	-	-
1	| | | | | | | | | | | |_ **PARAMETER_SYMBOL**	-	**dtSTRING**	60	-	2005fd
1	| | | | | | | | | | | |_ CHOICE	-	-	-	-	-
1	| | | | | | | | | | | | |_ **PARAMETER_BASICS**	-	-	-	-	2005fd
1	| | | | | | | | | | | | | |_ SEQUENCE	-	-	-	-	-
1	| | | | | | | | | | | | | | |_ **PARAMETER_NAME**	-	**dtMLSTRING**	100	Yes	2005fd
0..1	| | | | | | | | | | | | | | |_ **PARAMETER_DESCR**	-	**dtMLSTRING**	250	Yes	2005fd
0..1	| | | | | | | | | | | | | | |_ **PARAMETER_UNIT**	-	**dtMLSTRING**	60	Yes	2005
1	| | | | | | | | | | | | | |_ **FREF**	-	-	-	-	2005
1	| | | | | | | | | | | | | |_ SEQUENCE	-	-	-	-	-
1	| | | | | | | | | | | | | | |_ **REFERENCE_FEATURE_SYSTEM_NAME**	-	**dtSTRING**	80	-	-
1	| | | | | | | | | | | | | | |_ **FT_IDREF**	-	**dtSTRING**	60	-	-
0..1	| | | | | | | | | | | | |_ **PARAMETER_ORIGIN**	-	**dtMLSTRING**	6000	Yes	2005fd
0..1	| | | | | | | | | | | | |_ **PARAMETER_DEFAULT_VALUE**	-	**dtSTRING**	250	-	2005fd
0..1	| | | | | | | | | | | | |_ **PARAMETER_MEANING**	-	**dtSTRING**	20	-	2005fd
0..1	| | | | | | | | | | | | |_ **PARAMETER_ORDER**	-	**dtINTEGER**	-	-	2005fd

Copyright © 2022 BME e.V. - BMEcat® Version 2005.2
Copyright © 2010-2021 BME e.V. - BMEcat® Version 2005.1
Copyright © 2005-2009 BME e.V. - BMEcat® Version 2005
Copyright © 1998–2004 Fraunhofer IAO, Stuttgart; Universität Essen BLI - BMEcat® Version 1.2

Amount	Element name	Default value	Data type	Field length	Lang. specific	l.chg. in ver.
0..1	| | | | |_ **IPP_DEFINITIONS**	-	-	-	-	2005fd
1	| | | | | |_ SEQUENCE	-	-	-	-	-
1..*	| | | | | | |_ **IPP_DEFINITION**	-	-	-	-	2005fd
1	| | | | | | | |_ SEQUENCE	-	-	-	-	-
1	| | | | | | | | |_ **IPP_ID**	-	**dtSTRING**	60	-	2005fd
1	| | | | | | | | |_ **IPP_TYPE**	-	**dtSTRING**	20	-	2005fd
0..1	| | | | | | | | |_ **IPP_OPERATOR_IDREF**	-	**dtSTRING**	250	-	2005fd
0..1	| | | | | | | | |_ **IPP_DESCR**	-	**dtMLSTRING**	250	Yes	2005fd
1..*	| | | | | | | | |_ **IPP_OPERATION**	-	-	-	-	2005fd
1	| | | | | | | | | |_ SEQUENCE	-	-	-	-	-
1	| | | | | | | | | | |_ **IPP_OPERATION_ID**	-	**dtSTRING**	60	-	2005fd
1	| | | | | | | | | | |_ **IPP_OPERATION_TYPE**	-	**dtSTRING**	20	-	2005fd
0..1	| | | | | | | | | | |_ **IPP_OPERATION_DESCR**	-	**dtMLSTRING**	250	Yes	2005fd
1..*	| | | | | | | | | | |_ **IPP_OUTBOUND**	-	-	-	-	2005fd
1	| | | | | | | | | | | |_ SEQUENCE	-	-	-	-	-
1	| | | | | | | | | | | | |_ **IPP_OUTBOUND_FORMAT**	-	**dtSTRING**	50	-	2005fd
0..1	| | | | | | | | | | | | |_ **IPP_OUTBOUND_PARAMS**	-	-	-	-	2005
1	| | | | | | | | | | | | | |_ SEQUENCE	-	-	-	-	-
0..1	| | | | | | | | | | | | | | |_ **IPP_LANGUAGES**	-	-	-	-	2005fd
1	| | | | | | | | | | | | | | |_ SEQUENCE	-	-	-	-	-
0..*	| | | | | | | | | | | | | | | |_ **LANGUAGE**	-	**dtLANG**	-	-	-
0..1	| | | | | | | | | | | | | | |_ **IPP_TERRITORIES**	-	-	-	-	2005fd
1	| | | | | | | | | | | | | | |_ SEQUENCE	-	-	-	-	-
0..*	| | | | | | | | | | | | | | | |_ **TERRITORY**	-	**dtCOUNTRIES**	-	-	1.2_fd
0..1	| | | | | | | | | | | | | | |_ **IPP_PRICE_CURRENCIES**	-	-	-	-	2005fd
1	| | | | | | | | | | | | | | |_ SEQUENCE	-	-	-	-	-
0..*	| | | | | | | | | | | | | | | |_ **PRICE_CURRENCY**	-	**dtCURRENCIES**	-	-	2005.2
0..1	| | | | | | | | | | | | | | |_ **IPP_PRICE_TYPES**	-	-	-	-	2005fd
1	| | | | | | | | | | | | | | |_ SEQUENCE	-	-	-	-	-
0..*	| | | | | | | | | | | | | | | |_ **PRICE_TYPE**	-	**dtSTRING**	20	-	2005fd
0..1	| | | | | | | | | | | | | | |_ **IPP_SUPPLIER_PID**	-	-	-	-	2005fd
0..1	| | | | | | | | | | | | | | |_ **IPP_PRODUCTCONFIG_IDREF**	-	-	-	-	2005fd
0..1	| | | | | | | | | | | | | | |_ **IPP_PRODUCTLIST_IDREF**	-	-	-	-	2005fd
0..1	| | | | | | | | | | | | | | |_ **IPP_USER_INFO**	-	-	-	-	2005fd
0..1	| | | | | | | | | | | | | | |_ **IPP_AUTHENTIFICATION_INFO**	-	-	-	-	2005fd
1	| | | | | | | | | | | | | | |_ SEQUENCE	-	-	-	-	-
0..*	| | | | | | | | | | | | | | | |_ **AUTHENTIFICATION**	-	-	-	-	2005fd
1	| | | | | | | | | | | | | | | | |_ SEQUENCE	-	-	-	-	-
1	| | | | | | | | | | | | | | | | | |_ **LOGIN**	-	**dtSTRING**	60	-	2005fd
0..1	| | | | | | | | | | | | | | | | | |_ **PASSWORD**	-	**dtSTRING**	20	-	2005fd
0..*	| | | | | | | | | | | | | | |_ **IPP_PARAM_DEFINITION**	-	-	-	-	2005fd
1	| | | | | | | | | | | | | | |_ SEQUENCE	-	-	-	-	-
1	| | | | | | | | | | | | | | | |_ **IPP_PARAM_NAME**	-	**dtSTRING**	100	-	2005fd
0..1	| | | | | | | | | | | | | | | |_ **IPP_PARAM_DESCR**	-	**dtMLSTRING**	250	Yes	2005fd
1	| | | | | | | | | | | | | |_ **IPP_URI**	-	**dtMLSTRING**	255	Yes	2005fd

Copyright © 2022 BME e.V. - BMEcat® Version 2005.2
Copyright © 2010-2021 BME e.V. - BMEcat® Version 2005.1
Copyright © 2005-2009 BME e.V. - BMEcat® Version 2005
Copyright © 1998–2004 Fraunhofer IAO, Stuttgart; Universität Essen BLI - BMEcat® Version 1.2

Amount	Element name	Default value	Data type	Field length	Lang. specific	l.chg. in ver.
1..*	| | | | | | | | | | |_ **IPP_INBOUND**	-	-	-	-	2005fd
1	| | | | | | | | | | | |_ SEQUENCE	-	-	-	-	-
1	| | | | | | | | | | | | |_ **IPP_INBOUND_FORMAT**	-	**dtSTRING**	50	-	2005fd
0..1	| | | | | | | | | | | | |_ **IPP_INBOUND_PARAMS**	-	-	-	-	2005fd
1	| | | | | | | | | | | | | |_ SEQUENCE	-	-	-	-	-
1..*	| | | | | | | | | | | | | | |_ **IPP_PARAM_DEFINITION**	-	-	-	-	2005fd
1	| | | | | | | | | | | | | | | |_ SEQUENCE	-	-	-	-	-
1	| | | | | | | | | | | | | | | | |_ **IPP_PARAM_NAME**	-	**dtSTRING**	100	-	2005fd
0..1	| | | | | | | | | | | | | | | | |_ **IPP_PARAM_DESCR**	-	**dtMLSTRING**	250	Yes	2005fd
0..1	| | | | | | | | | | | | | | |_ **IPP_RESPONSE_TIME**	-	**dtDURATION**	-	-	2005fd
1	| | | | |_ CHOICE	-	-	-	-	-
1	| | | | | |_ SEQUENCE	-	-	-	-	-
0..*	| | | | | | |_ **PRODUCT** in context T_NEW_CATALOG	-	-	-	-	2005
1	| | | | | | | |_ SEQUENCE	-	-	-	-	-
1	| | | | | | | | |_ **SUPPLIER_PID**	-	**dtSTRING**	32	-	2005
0..1	| | | | | | | | |_ **SUPPLIER_IDREF**	-	**dtSTRING**	250	-	2005fd
1	| | | | | | | | |_ **PRODUCT_DETAILS**	-	-	-	-	2005fd
1	| | | | | | | | | |_ SEQUENCE	-	-	-	-	-
1	| | | | | | | | | | |_ **DESCRIPTION_SHORT**	-	**dtMLSTRING**	150	Yes	-
0..1	| | | | | | | | | | |_ **DESCRIPTION_LONG**	-	**dtMLSTRING**	64000	Yes	1.2_fd
0..1	| | | | | | | | | | |_ CHOICE	-	-	-	-	-
0..*	| | | | | | | | | | | |_ **INTERNATIONAL_PID**	-	**dtSTRING**	100	-	2005fd
0..1	| | | | | | | | | | | |_ **EAN**	-	**dtSTRING**	14	-	-
0..1	| | | | | | | | | | |_ **SUPPLIER_ALT_PID**	-	**dtSTRING**	50	-	2005fd
0..*	| | | | | | | | | | |_ **BUYER_PID**	-	**dtSTRING**	50	-	2005fd
0..1	| | | | | | | | | | |_ **MANUFACTURER_PID**	-	**dtSTRING**	50	-	2005fd
0..1	| | | | | | | | | | |_ CHOICE	-	-	-	-	-
0..1	| | | | | | | | | | | |_ **MANUFACTURER_IDREF**	-	**dtSTRING**	250	-	2005fd
0..1	| | | | | | | | | | | |_ **MANUFACTURER_NAME**	-	**dtSTRING**	50	-	-
0..1	| | | | | | | | | | |_ **MANUFACTURER_TYPE_DESCR**	-	**dtMLSTRING**	50	Yes	1.2_fd
0..1	| | | | | | | | | | |_ **ERP_GROUP_BUYER**	-	**dtSTRING**	10	-	-
0..1	| | | | | | | | | | |_ **ERP_GROUP_SUPPLIER**	-	**dtSTRING**	10	-	-
0..1	| | | | | | | | | | |_ **DELIVERY_TIME**	-	**dtNUMBER**	-	-	1.2_fd
0..*	| | | | | | | | | | |_ **SPECIAL_TREATMENT_CLASS**	-	**dtSTRING**	20	-	-
0..1	| | | | | | | | | | |_ **KEYWORD**	-	**dtMLSTRING**	50	Yes	-
0..1	| | | | | | | | | | |_ **REMARKS**	-	**dtMLSTRING**	64000	Yes	-
0..1	| | | | | | | | | | |_ **SEGMENT**	-	**dtMLSTRING**	100	Yes	1.2_fd
0..1	| | | | | | | | | | |_ **PRODUCT_ORDER**	-	**dtINTEGER**	-	-	2005fd
0..1	| | | | | | | | | | |_ **PRODUCT_STATUS**	-	**dtMLSTRING**	250	Yes	2005fd
0..*	| | | | | | | | | | |_ **INTERNATIONAL_RESTRICTIONS**	-	**dtSTRING**	250	-	2005fd
0..1	| | | | | | | | | | |_ **ACCOUNTING_INFO**	-	-	-	-	2005fd
1	| | | | | | | | | | | |_ SEQUENCE	-	-	-	-	-
1	| | | | | | | | | | | | |_ **COST_CATEGORY_ID**	-	**dtSTRING**	64	-	2005fd
0..1	| | | | | | | | | | | | |_ **COST_TYPE**	-	**dtSTRING**	64	-	2005fd
0..1	| | | | | | | | | | | | |_ **COST_ACCOUNT**	-	**dtSTRING**	64	-	2005fd

Copyright © 2022 BME e.V. - BMEcat® Version 2005.2
Copyright © 2010-2021 BME e.V. - BMEcat® Version 2005.1
Copyright © 2005-2009 BME e.V. - BMEcat® Version 2005
Copyright © 1998–2004 Fraunhofer IAO, Stuttgart; Universität Essen BLI - BMEcat® Version 1.2

Amount	Element name	Default value	Data type	Field length	Lang. specific	l.chg. in ver.
0..*	|_ **AGREEMENT_REF**	-	-	-	-	2005fd
1	|_ SEQUENCE	-	-	-	-	-
1	|_ **AGREEMENT_IDREF**	-	**dtSTRING**	50	-	2005fd
0..1	|_ **AGREEMENT_LINE_IDREF**	-	**dtSTRING**	50	-	2005fd
0..*	|_ **PRODUCT_TYPE**	-	**dtSTRING**	50	-	2005fd
0..1	|_ **PRODUCT_CATEGORY**	-	**dtSTRING**	20	-	2005fd
0..*	|_ **PRODUCT_FEATURES**	-	-	-	-	2005
1	|_ SEQUENCE	-	-	-	-	-
0..1	|_ **REFERENCE_FEATURE_SYSTEM_NAME**	-	**dtSTRING**	80	-	-
0..1	|_ CHOICE	-	-	-	-	-
0..*	|_ **REFERENCE_FEATURE_GROUP_ID**	-	**dtSTRING**	60	-	-
0..1	|_ **REFERENCE_FEATURE_GROUP_NAME**	-	**dtMLSTRING**	60	Yes	-
0..*	|_ **REFERENCE_FEATURE_GROUP_ID2**	-	**dtSTRING**	60	-	2005fd
0..1	|_ **GROUP_PRODUCT_ORDER**	-	**dtINTEGER**	-	-	2005
0..*	|_ **FEATURE**	-	-	-	-	2005.2
1	|_ SEQUENCE	-	-	-	-	-
1	|_ CHOICE	-	-	-	-	-
1	|_ **FNAME**	-	**dtMLSTRING**	80	Yes	2005.2
1	|_ **FT_IDREF**	-	**dtSTRING**	60	-	-
1	|_ **FTEMPLATE**	-	-	-	-	2005
1	|_ SEQUENCE	-	-	-	-	-
1	|_ **FT_ID**	-	**dtSTRING**	60	-	-
1	|_ **FT_NAME**	-	**dtMLSTRING**	80	Yes	2005fd
0..1	|_ **FT_SHORTNAME**	-	**dtMLSTRING**	80	Yes	2005fd
0..1	|_ **FT_DESCR**	-	**dtMLSTRING**	16000	Yes	2005fd
0..1	|_ **FT_VERSION**	-	-	-	-	2005fd
1	|_ SEQUENCE	-	-	-	-	-
1	|_ **VERSION**	-	**dtSTRING**	20	-	2005fd
0..1	|_ **VERSION_DATE**	-	**dtDATETIME**	-	-	2005fd
0..1	|_ **REVISION**	-	**dtSTRING**	20	-	2005fd
0..1	|_ **REVISION_DATE**	-	**dtDATETIME**	-	-	2005fd
0..1	|_ **ORIGINAL_DATE**	-	**dtDATETIME**	-	-	2005fd
0..1	|_ CHOICE	-	-	-	-	-
0..1	|_ **FT_GROUP_IDREF**	-	**dtSTRING**	60	-	2005
0..1	|_ **FT_GROUP_NAME**	-	**dtMLSTRING**	80	Yes	2005
0..1	|_ **FT_DEPENDENCIES**	-	-	-	-	2005
1	|_ SEQUENCE	-	-	-	-	-
1..*	|_ **FT_IDREF**	-	**dtSTRING**	60	-	-
0..1	|_ **FEATURE_CONTENT**	-	-	-	-	2005
1	|_ SEQUENCE	-	-	-	-	-
1	|_ **FT_DATATYPE**	-	**dtSTRING**	20	-	-
0..1	|_ **FT_FACETS**	-	-	-	-	2005fd
1	|_ SEQUENCE	-	-	-	-	-
1..4	|_ **FT_FACET**	-	**dtSTRING**	20	-	2005fd
0..1	|_ **FT_VALUES**	-	-	-	-	2005

Copyright © 2022 BME e.V. - BMEcat® Version 2005.2
Copyright © 2010-2021 BME e.V. - BMEcat® Version 2005.1
Copyright © 2005-2009 BME e.V. - BMEcat® Version 2005
Copyright © 1998–2004 Fraunhofer IAO, Stuttgart; Universität Essen BLI - BMEcat® Version 1.2

Amount	Element name	Default value	Data type	Field length	Lang. specific	l.chg. in ver.
1	|_ SEQUENCE	-	-	-	-	-
1..*	|_ **FT_VALUE**	-	-	-	-	2005
1	|_ SEQUENCE	-	-	-	-	-
1	|_ CHOICE	-	-	-	-	-
1	|_ **VALUE_IDREF**	-	**dtSTRING**	60	-	2005fd
1	|_ **VALUE_SIMPLE**	-	**dtSTRING**	80	-	2005fd
1	|_ **VALUE_TEXT**	-	**dtMLSTRING**	80	Yes	2005fd
1	|_ **VALUE_RANGE**	-	-	-	-	2005fd
1	|_ SEQUENCE	-	-	-	-	-
1	|_ **STARTVALUE**	-	**dtNUMBER**	-	-	2005fd
1	|_ **ENDVALUE**	-	**dtNUMBER**	-	-	2005fd
0..1	|_ **INTERVALVALUE**	-	**dtNUMBER**	-	-	2005fd
0..1	|_ **MIME_INFO**	-	-	-	-	-
1	|_ SEQUENCE	-	-	-	-	-
1..*	|_ **MIME**	-	-	-	-	-
1	|_ SEQUENCE	-	-	-	-	-
0..1	|_ **MIME_TYPE**	-	**dtSTRING**	100	-	2005.2
1	|_ **MIME_SOURCE**	-	**dtMLSTRING**	255	Yes	-
0..1	|_ **MIME_DESCR**	-	**dtMLSTRING**	250	Yes	-
0..1	|_ **MIME_ALT**	-	**dtMLSTRING**	80	Yes	2005fd
0..1	|_ **MIME_PURPOSE**	-	**dtSTRING**	20	-	2005fd
0..1	|_ **MIME_ORDER**	-	**dtINTEGER**	-	-	-
0..1	|_ **CONFIG_INFO**	-	-	-	-	2005fd
1	|_ SEQUENCE	-	-	-	-	-
1	|_ **CONFIG_CODE**	-	**dtSTRING**	50	-	2005fd
0..1	|_ **PRODUCT_PRICE_DETAILS**	-	-	-	-	2005fd
1	|_ SEQUENCE	-	-	-	-	-
0..1	|_ CHOICE	-	-	-	-	-
0..1	|_ SEQUENCE	-	-	-	-	-
0..1	|_ **VALID_START_DATE**	-	**dtDATETIME**	-	-	2005fd
0..1	|_ **VALID_END_DATE**	-	**dtDATETIME**	-	-	2005fd
0..2	|_ **DATETIME** in the context of ARTICLE_PRICE_DETAILS	-	-	-	-	-
1	|_ SEQUENCE	-	-	-	-	-
1	|_ **DATE**	-	**dtDATETYPE**	-	-	-
0..1	|_ **TIME**	-	**dtTIMETYPE**	-	-	-
0..1	|_ **TIMEZONE**	-	**dtTIMEZONETYPE**	-	-	-
0..1	|_ **DAILY_PRICE**	-	**dtBOOLEAN**	-	-	-
1..*	|_ **PRODUCT_PRICE**	-	-	-	-	2005
1	|_ SEQUENCE	-	-	-	-	-
0..1	|_ CHOICE	-	-	-	-	-
0..1	|_ **PRICE_AMOUNT**	-	**dtNUMBER**	-	-	-
0..1	|_ **PRICE_FORMULA**	-	-	-	-	2005fd
1	|_ SEQUENCE	-	-	-	-	-
1	|_ **FORMULA_IDREF**	-	**dtSTRING**	60	-	2005fd
0..1	|_ **PARAMETERS**	-	-	-	-	2005fd

Copyright © 2022 BME e.V. - BMEcat® Version 2005.2
Copyright © 2010-2021 BME e.V. - BMEcat® Version 2005.1
Copyright © 2005-2009 BME e.V. - BMEcat® Version 2005
Copyright © 1998–2004 Fraunhofer IAO, Stuttgart; Universität Essen BLI - BMEcat® Version 1.2

Amount	Element name	Default value	Data type	Field length	Lang. specific	l.chg. in ver.
1	|_ SEQUENCE	-	-	-	-	-
1..*	|_ **PARAMETER**	-	-	-	-	2005fd
1	|_ SEQUENCE	-	-	-	-	-
1	|_ **PARAMETER_SYMBOLREF**	-	**dtSTRING**	60	-	2005fd
1	|_ **PARAMETER_VALUE**	-	**dtSTRING**	250	-	2005fd
0..1	|_ **PRICE_CURRENCY**	-	**dtCURRENCIES**	-	-	2005.2
0..1	|_ CHOICE	-	-	-	-	-
0..*	|_ **TAX_DETAILS**	-	-	-	-	2005
1	|_ SEQUENCE	-	-	-	-	-
0..1	|_ **CALCULATION_SEQUENCE**	1	**dtCOUNT**	-	-	2005fd
0..1	|_ **TAX_CATEGORY**	-	**dtSTRING**	80	-	2005
0..1	|_ **TAX_TYPE**	vat	**dtSTRING**	250	-	2005
0..1	|_ **TAX**	-	**dtNUMBER**	-	-	-
0..1	|_ **EXEMPTION_REASON**	-	**dtMLSTRING**	250	Yes	2005
0..1	|_ **JURISDICTION**	-	**dtMLSTRING**	250	Yes	2005
0..1	|_ **TAX**	-	**dtNUMBER**	-	-	-
0..1	|_ **PRICE_FACTOR**	1	**dtNUMBER**	-	-	2005
0..1	|_ **LOWER_BOUND**	-	**dtNUMBER**	-	-	-
0..1	|_ CHOICE	-	-	-	-	-
0..*	|_ **TERRITORY**	-	**dtCOUNTRIES**	-	-	1.2_fd
0..1	|_ **AREA_REFS**	-	-	-	-	2005fd
1	|_ SEQUENCE	-	-	-	-	-
1..*	|_ **AREA_IDREF**	-	**dtSTRING**	60	-	2005fd
0..1	|_ **PRICE_BASE**	-	-	-	-	2005fd
1	|_ SEQUENCE	-	-	-	-	-
1	|_ **PRICE_UNIT**	-	**dtPUNIT**	-	-	1.2_fd
0..1	|_ **PRICE_UNIT_FACTOR**	1	**dtFLOAT**	-	-	2005
0..*	|_ **PRICE_FLAG**	-	**dtBOOLEAN**	-	-	-
0..1	|_ **VALUE_ORDER**	-	**dtINTEGER**	-	-	2005fd
0..1	|_ **DEFAULT_FLAG**	-	**dtBOOLEAN**	-	-	2005fd
0..1	|_ **FT_VALENCY**	univalent	**dtSTRING**	20	-	2005fd
0..1	|_ CHOICE	-	-	-	-	-
0..1	|_ **FT_UNIT_IDREF**	-	**dtSTRING**	60	-	2005fd
0..1	|_ **FT_UNIT**	-	**dtSTRING**	80	-	2005fd
0..1	|_ **FT_MANDATORY**	-	**dtBOOLEAN**	-	-	-
0..1	|_ **FT_ORDER**	-	**dtINTEGER**	-	-	-
0..1	|_ **FT_SYMBOL**	-	**dtMLSTRING**	20	Yes	1.2
0..1	|_ **FT_SYNONYMS**	-	-	-	-	2005fd
1	|_ SEQUENCE	-	-	-	-	-
1	|_ **SYNONYM**	-	**dtMLSTRING**	80	Yes	2005fd
0..1	|_ **MIME_INFO**	-	-	-	-	-
1	|_ SEQUENCE	-	-	-	-	-
1..*	|_ **MIME**	-	-	-	-	-
1	|_ SEQUENCE	-	-	-	-	-
0..1	|_ **MIME_TYPE**	-	**dtSTRING**	100	-	2005.2

Copyright © 2022 BME e.V. - BMEcat® Version 2005.2
Copyright © 2010-2021 BME e.V. - BMEcat® Version 2005.1
Copyright © 2005-2009 BME e.V. - BMEcat® Version 2005
Copyright © 1998–2004 Fraunhofer IAO, Stuttgart; Universität Essen BLI - BMEcat® Version 1.2

Amount	Element name	Default value	Data type	Field length	Lang. specific	l.chg. in ver.
1	|_ **MIME_SOURCE**	-	**dtMLSTRING**	255	Yes	-
0..1	|_ **MIME_DESCR**	-	**dtMLSTRING**	250	Yes	-
0..1	|_ **MIME_ALT**	-	**dtMLSTRING**	80	Yes	2005fd
0..1	|_ **MIME_PURPOSE**	-	**dtSTRING**	20	-	2005fd
0..1	|_ **MIME_ORDER**	-	**dtINTEGER**	-	-	-
0..1	|_ **FT_SOURCE**	-	-	-	-	2005
1	|_ SEQUENCE	-	-	-	-	-
0..1	|_ **SOURCE_NAME**	-	**dtMLSTRING**	80	Yes	2005
0..1	|_ **SOURCE_URI**	-	**dtSTRING**	255	-	2005fd
0..1	|_ **PARTY_IDREF**	-	**dtSTRING**	250	-	2005fd
0..1	|_ **FT_NOTE**	-	**dtMLSTRING**	16000	Yes	2005fd
0..1	|_ **FT_REMARK**	-	**dtMLSTRING**	16000	Yes	2005fd
1	|_ CHOICE	-	-	-	-	-
1..*	|_ CHOICE	-	-	-	-	-
1	|_ **FVALUE**	-	**dtMLSTRING**	-	Yes	2005.1
1..*	|_ **VALUE_IDREF**	-	**dtSTRING**	60	-	2005fd
1	|_ **VARIANTS**	-	-	-	-	1.2_fd
1	|_ SEQUENCE	-	-	-	-	-
1..*	|_ **VARIANT**	-	-	-	-	-
1	|_ SEQUENCE	-	-	-	-	-
1	|_ CHOICE	-	-	-	-	-
1	|_ **FVALUE**	-	**dtMLSTRING**	-	Yes	2005.1
1..*	|_ **VALUE_IDREF**	-	**dtSTRING**	60	-	2005fd
1	|_ **SUPPLIER_AID_SUPPLEMENT**	-	**dtSTRING**	31	-	-
1	|_ **VORDER**	-	**dtINTEGER**	-	-	-
0..1	|_ **FUNIT**	-	**dtSTRING**	20	-	-
0..1	|_ **FORDER**	-	**dtINTEGER**	-	-	-
0..1	|_ **FDESCR**	-	**dtMLSTRING**	250	Yes	1.2_fd
0..1	|_ **FVALUE_DETAILS**	-	**dtMLSTRING**	250	Yes	1.2_fd
0..1	|_ **FVALUE_TYPE**	-	**dtSTRING**	20	-	2005fd
0..1	|_ **FID**	-	**dtSTRING**	-	-	2005.1
0..1	|_ **FPARENT_ID**	-	**dtSTRING**	-	-	2005.1
0..*	|_ **FEATURE**	-	-	-	-	2005.2
0..*	|_ **FEATURE_GROUP**	-	-	-	-	2005.1
1	|_ SEQUENCE	-	-	-	-	-
0..*	|_ **FEATURE_GROUP_NAME**	-	**dtMLSTRING**	-	-	2005.1
0..*	|_ **FEATURE_GROUP_DESCRIPTION**	-	**dtMLSTRING**	-	-	2005.1
1	|_ **REFERENCE_FEATURE_GROUP_ID**	-	**dtSTRING**	60	-	-
0..*	|_ **FEATURE**	-	-	-	-	2005.2
1	|_ SEQUENCE	-	-	-	-	-
1	|_ CHOICE	-	-	-	-	-
1	|_ **FNAME**	-	**dtMLSTRING**	80	Yes	2005.2
1	|_ **FT_IDREF**	-	**dtSTRING**	60	-	-
1	|_ **FTEMPLATE**	-	-	-	-	2005
1	|_ SEQUENCE	-	-	-	-	-

Copyright © 2022 BME e.V. - BMEcat® Version 2005.2
Copyright © 2010-2021 BME e.V. - BMEcat® Version 2005.1
Copyright © 2005-2009 BME e.V. - BMEcat® Version 2005
Copyright © 1998–2004 Fraunhofer IAO, Stuttgart; Universität Essen BLI - BMEcat® Version 1.2

Amount	Element name	Default value	Data type	Field length	Lang. specific	l.chg. in ver.
1	|_ **FT_ID**	-	**dtSTRING**	60	-	-
1	|_ **FT_NAME**	-	**dtMLSTRING**	80	Yes	2005fd
0..1	|_ **FT_SHORTNAME**	-	**dtMLSTRING**	80	Yes	2005fd
0..1	|_ **FT_DESCR**	-	**dtMLSTRING**	16000	Yes	2005fd
0..1	|_ **FT_VERSION**	-	-	-	-	2005fd
1	|_ SEQUENCE	-	-	-	-	-
1	|_ **VERSION**	-	**dtSTRING**	20	-	2005fd
0..1	|_ **VERSION_DATE**	-	**dtDATETIME**	-	-	2005fd
0..1	|_ **REVISION**	-	**dtSTRING**	20	-	2005fd
0..1	|_ **REVISION_DATE**	-	**dtDATETIME**	-	-	2005fd
0..1	|_ **ORIGINAL_DATE**	-	**dtDATETIME**	-	-	2005fd
0..1	|_ CHOICE	-	-	-	-	-
0..1	|_ **FT_GROUP_IDREF**	-	**dtSTRING**	60	-	2005
0..1	|_ **FT_GROUP_NAME**	-	**dtMLSTRING**	80	Yes	2005
0..1	|_ **FT_DEPENDENCIES**	-	-	-	-	2005
1	|_ SEQUENCE	-	-	-	-	-
1..*	|_ **FT_IDREF**	-	**dtSTRING**	60	-	-
0..1	|_ **FEATURE_CONTENT**	-	-	-	-	2005
1	|_ SEQUENCE	-	-	-	-	-
1	|_ **FT_DATATYPE**	-	**dtSTRING**	20	-	-
0..1	|_ **FT_FACETS**	-	-	-	-	2005fd
1	|_ SEQUENCE	-	-	-	-	-
1..4	|_ **FT_FACET**	-	**dtSTRING**	20	-	2005fd
0..1	|_ **FT_VALUES**	-	-	-	-	2005
1	|_ SEQUENCE	-	-	-	-	-
1..*	|_ **FT_VALUE**	-	-	-	-	2005
1	|_ SEQUENCE	-	-	-	-	-
1	|_ CHOICE	-	-	-	-	-
1	|_ **VALUE_IDREF**	-	**dtSTRING**	60	-	2005fd
1	|_ **VALUE_SIMPLE**	-	**dtSTRING**	80	-	2005fd
1	|_ **VALUE_TEXT**	-	**dtMLSTRING**	80	Yes	2005fd
1	|_ **VALUE_RANGE**	-	-	-	-	2005fd
1	|_ SEQUENCE	-	-	-	-	-
1	|_ **STARTVALUE**	-	**dtNUMBER**	-	-	2005fd
1	|_ **ENDVALUE**	-	**dtNUMBER**	-	-	2005fd
0..1	|_ **INTERVALVALUE**	-	**dtNUMBER**	-	-	2005fd
0..1	|_ **MIME_INFO**	-	-	-	-	-
1	|_ SEQUENCE	-	-	-	-	-
1..*	|_ **MIME**	-	-	-	-	-
1	|_ SEQUENCE	-	-	-	-	-
0..1	|_ **MIME_TYPE**	-	**dtSTRING**	100	-	2005.2
1	|_ **MIME_SOURCE**	-	**dtMLSTRING**	255	Yes	-
0..1	|_ **MIME_DESCR**	-	**dtMLSTRING**	250	Yes	-
0..1	|_ **MIME_ALT**	-	**dtMLSTRING**	80	Yes	2005fd
0..1	|_ **MIME_PURPOSE**	-	**dtSTRING**	20	-	2005fd

Copyright © 2022 BME e.V. - BMEcat® Version 2005.2
Copyright © 2010-2021 BME e.V. - BMEcat® Version 2005.1
Copyright © 2005-2009 BME e.V. - BMEcat® Version 2005
Copyright © 1998–2004 Fraunhofer IAO, Stuttgart; Universität Essen BLI - BMEcat® Version 1.2

Amount	Element name	Default value	Data type	Field length	Lang. specific	l.chg. in ver.
0..1	|_ **MIME_ORDER**	-	**dtINTEGER**	-	-	-
0..1	|_ **CONFIG_INFO**	-	-	-	-	2005fd
1	|_ SEQUENCE	-	-	-	-	-
1	|_ **CONFIG_CODE**	-	**dtSTRING**	50	-	2005fd
0..1	|_ **PRODUCT_PRICE_DETAILS**	-	-	-	-	2005fd
1	|_ SEQUENCE	-	-	-	-	-
0..1	|_ CHOICE	-	-	-	-	-
0..1	|_ SEQUENCE	-	-	-	-	-
0..1	|_ **VALID_START_DATE**	-	**dtDATETIME**	-	-	2005fd
0..1	|_ **VALID_END_DATE**	-	**dtDATETIME**	-	-	2005fd
0..2	|_ **DATETIME** in the context of ARTICLE_PRICE_DETAILS	-	-	-	-	-
1	|_ SEQUENCE	-	-	-	-	-
1	|_ **DATE**	-	**dtDATETYPE**	-	-	-
0..1	|_ **TIME**	-	**dtTIMETYPE**	-	-	-
0..1	|_ **TIMEZONE**	-	**dtTIMEZONETYPE**	-	-	-
0..1	|_ **DAILY_PRICE**	-	**dtBOOLEAN**	-	-	-
1..*	|_ **PRODUCT_PRICE**	-	-	-	-	2005
1	|_ SEQUENCE	-	-	-	-	-
0..1	|_ CHOICE	-	-	-	-	-
0..1	|_ **PRICE_AMOUNT**	-	**dtNUMBER**	-	-	-
0..1	|_ **PRICE_FORMULA**	-	-	-	-	2005fd
1	|_ SEQUENCE	-	-	-	-	-
1	|_ **FORMULA_IDREF**	-	**dtSTRING**	60	-	2005fd
0..1	|_ **PARAMETERS**	-	-	-	-	2005fd
1	|_ SEQUENCE	-	-	-	-	-
1..*	|_ **PARAMETER**	-	-	-	-	2005fd
1	|_ SEQUENCE	-	-	-	-	-
1	|_ **PARAMETER_SYMBOLREF**	-	**dtSTRING**	60	-	2005fd
1	|_ **PARAMETER_VALUE**	-	**dtSTRING**	250	-	2005fd
0..1	|_ **PRICE_CURRENCY**	-	**dtCURRENCIES**	-	-	2005.2
0..1	|_ CHOICE	-	-	-	-	-
0..*	|_ **TAX_DETAILS**	-	-	-	-	2005
1	|_ SEQUENCE	-	-	-	-	-
0..1	|_ **CALCULATION_SEQUENCE**	1	**dtCOUNT**	-	-	2005fd
0..1	|_ **TAX_CATEGORY**	-	**dtSTRING**	80	-	2005
0..1	|_ **TAX_TYPE**	vat	**dtSTRING**	250	-	2005
0..1	|_ **TAX**	-	**dtNUMBER**	-	-	-
0..1	|_ **EXEMPTION_REASON**	-	**dtMLSTRING**	250	Yes	2005
0..1	|_ **JURISDICTION**	-	**dtMLSTRING**	250	Yes	2005
0..1	|_ **TAX**	-	**dtNUMBER**	-	-	-
0..1	|_ **PRICE_FACTOR**	1	**dtNUMBER**	-	-	2005
0..1	|_ **LOWER_BOUND**	-	**dtNUMBER**	-	-	-
0..1	|_ CHOICE	-	-	-	-	-
0..*	|_ **TERRITORY**	-	**dtCOUNTRIES**	-	-	1.2_fd
0..1	|_ **AREA_REFS**	-	-	-	-	2005fd

Copyright © 2022 BME e.V. - BMEcat® Version 2005.2
Copyright © 2010-2021 BME e.V. - BMEcat® Version 2005.1
Copyright © 2005-2009 BME e.V. - BMEcat® Version 2005
Copyright © 1998–2004 Fraunhofer IAO, Stuttgart; Universität Essen BLI - BMEcat® Version 1.2

Amount	Element name	Default value	Data type	Field length	Lang. specific	l.chg. in ver.
1	| | | | | | | | | | | | | | | | | | | | | | | | | | | | | | |_ SEQUENCE	-	-	-	-	-
1..*	| | | | | | | | | | | | | | | | | | | | | | | | | | | | | | | |_ **AREA_IDREF**	-	**dtSTRING**	60	-	2005fd
0..1	| | | | | | | | | | | | | | | | | | | | | | | | | | | | | |_ **PRICE_BASE**	-	-	-	-	2005fd
1	| | | | | | | | | | | | | | | | | | | | | | | | | | | | | |_ SEQUENCE	-	-	-	-	-
1	| | | | | | | | | | | | | | | | | | | | | | | | | | | | | | |_ **PRICE_UNIT**	-	**dtPUNIT**	-	-	1.2_fd
0..1	| | | | | | | | | | | | | | | | | | | | | | | | | | | | | | |_ **PRICE_UNIT_FACTOR**	1	**dtFLOAT**	-	-	2005
0..*	| | | | | | | | | | | | | | | | | | | | | | | | | | | | | |_ **PRICE_FLAG**	-	**dtBOOLEAN**	-	-	-
0..1	| | | | | | | | | | | | | | | | | | | | | | | | | | | | | | |_ **VALUE_ORDER**	-	**dtINTEGER**	-	-	2005fd
0..1	| | | | | | | | | | | | | | | | | | | | | | | | | | | | | | |_ **DEFAULT_FLAG**	-	**dtBOOLEAN**	-	-	2005fd
0..1	| | | | | | | | | | | | | | | | | | | | | | | | | | | | |_ **FT_VALENCY**	univalent	**dtSTRING**	20	-	2005fd
0..1	| | | | | | | | | | | | | | | | | | | | | | | | | | | | |_ CHOICE	-	-	-	-	-
0..1	| | | | | | | | | | | | | | | | | | | | | | | | | | | | | |_ **FT_UNIT_IDREF**	-	**dtSTRING**	60	-	2005fd
0..1	| | | | | | | | | | | | | | | | | | | | | | | | | | | | | |_ **FT_UNIT**	-	**dtSTRING**	80	-	2005fd
0..1	| | | | | | | | | | | | | | | | | | | | | | | | | | | | |_ **FT_MANDATORY**	-	**dtBOOLEAN**	-	-	-
0..1	| | | | | | | | | | | | | | | | | | | | | | | | | | | | |_ **FT_ORDER**	-	**dtINTEGER**	-	-	-
0..1	| | | | | | | | | | | | | | | | | | | | | | | | | | | | |_ **FT_SYMBOL**	-	**dtMLSTRING**	20	Yes	1.2
0..1	| | | | | | | | | | | | | | | | | | | | | | | | | | | | |_ **FT_SYNONYMS**	-	-	-	-	2005fd
1	| | | | | | | | | | | | | | | | | | | | | | | | | | | | |_ SEQUENCE	-	-	-	-	-
1	| | | | | | | | | | | | | | | | | | | | | | | | | | | | | |_ **SYNONYM**	-	**dtMLSTRING**	80	Yes	2005fd
0..1	| | | | | | | | | | | | | | | | | | | | | | | | | | | | |_ **MIME_INFO**	-	-	-	-	-
1	| | | | | | | | | | | | | | | | | | | | | | | | | | | | |_ SEQUENCE	-	-	-	-	-
1..*	| | | | | | | | | | | | | | | | | | | | | | | | | | | | | |_ **MIME**	-	-	-	-	-
1	| | | | | | | | | | | | | | | | | | | | | | | | | | | | | | |_ SEQUENCE	-	-	-	-	-
0..1	| | | | | | | | | | | | | | | | | | | | | | | | | | | | | | | |_ **MIME_TYPE**	-	**dtSTRING**	100	-	2005.2
1	| | | | | | | | | | | | | | | | | | | | | | | | | | | | | | | |_ **MIME_SOURCE**	-	**dtMLSTRING**	255	Yes	-
0..1	| | | | | | | | | | | | | | | | | | | | | | | | | | | | | | | |_ **MIME_DESCR**	-	**dtMLSTRING**	250	Yes	-
0..1	| | | | | | | | | | | | | | | | | | | | | | | | | | | | | | | |_ **MIME_ALT**	-	**dtMLSTRING**	80	Yes	2005fd
0..1	| | | | | | | | | | | | | | | | | | | | | | | | | | | | | | | |_ **MIME_PURPOSE**	-	**dtSTRING**	20	-	2005fd
0..1	| | | | | | | | | | | | | | | | | | | | | | | | | | | | | | | |_ **MIME_ORDER**	-	**dtINTEGER**	-	-	-
0..1	| | | | | | | | | | | | | | | | | | | | | | | | | | | | |_ **FT_SOURCE**	-	-	-	-	2005
1	| | | | | | | | | | | | | | | | | | | | | | | | | | | | |_ SEQUENCE	-	-	-	-	-
0..1	| | | | | | | | | | | | | | | | | | | | | | | | | | | | | |_ **SOURCE_NAME**	-	**dtMLSTRING**	80	Yes	2005
0..1	| | | | | | | | | | | | | | | | | | | | | | | | | | | | | |_ **SOURCE_URI**	-	**dtSTRING**	255	-	2005fd
0..1	| | | | | | | | | | | | | | | | | | | | | | | | | | | | | |_ **PARTY_IDREF**	-	**dtSTRING**	250	-	2005fd
0..1	| | | | | | | | | | | | | | | | | | | | | | | | | | | | |_ **FT_NOTE**	-	**dtMLSTRING**	16000	Yes	2005fd
0..1	| | | | | | | | | | | | | | | | | | | | | | | | | | | | |_ **FT_REMARK**	-	**dtMLSTRING**	16000	Yes	2005fd
1	| | | | | | | | | | | | | | | | | | | | | | | | | | | | |_ CHOICE	-	-	-	-	-
1..*	| | | | | | | | | | | | | | | | | | | | | | | | | | | | |_ CHOICE	-	-	-	-	-
1	| | | | | | | | | | | | | | | | | | | | | | | | | | | | |_ **FVALUE**	-	**dtMLSTRING**	-	Yes	2005.1
1..*	| | | | | | | | | | | | | | | | | | | | | | | | | | | | |_ **VALUE_IDREF**	-	**dtSTRING**	60	-	2005fd
1	| | | | | | | | | | | | | | | | | | | | | | | | | | | | |_ **VARIANTS**	-	-	-	-	1.2_fd
1	| | | | | | | | | | | | | | | | | | | | | | | | | | | | |_ SEQUENCE	-	-	-	-	-
1..*	| | | | | | | | | | | | | | | | | | | | | | | | | | | | |_ **VARIANT**	-	-	-	-	-
1	| | | | | | | | | | | | | | | | | | | | | | | | | | | | |_ SEQUENCE	-	-	-	-	-
1	| | | | | | | | | | | | | | | | | | | | | | | | | | | | |_ CHOICE	-	-	-	-	-

Copyright © 2022 BME e.V. - BMEcat® Version 2005.2
Copyright © 2010-2021 BME e.V. - BMEcat® Version 2005.1
Copyright © 2005-2009 BME e.V. - BMEcat® Version 2005
Copyright © 1998–2004 Fraunhofer IAO, Stuttgart; Universität Essen BLI - BMEcat® Version 1.2

Amount	Element name	Default value	Data type	Field length	Lang. specific	l.chg. in ver.
1	| | | | | | | | | | | | | | | | | | | | |_ **FVALUE**	-	**dtMLSTRING**	-	Yes	2005.1
1..*	| | | | | | | | | | | | | | | | | | | | |_ **VALUE_IDREF**	-	**dtSTRING**	60	-	2005fd
1	| | | | | | | | | | | | | | | | | | | | |_ **SUPPLIER_AID_SUPPLEMENT**	-	**dtSTRING**	31	-	-
1	| | | | | | | | | | | | | | | | | | | | |_ **VORDER**	-	**dtINTEGER**	-	-	-
0..1	| | | | | | | | | | | | | | | | | | | |_ **FUNIT**	-	**dtSTRING**	20	-	-
0..1	| | | | | | | | | | | | | | | | | | | |_ **FORDER**	-	**dtINTEGER**	-	-	-
0..1	| | | | | | | | | | | | | | | | | | | |_ **FDESCR**	-	**dtMLSTRING**	250	Yes	1.2_fd
0..1	| | | | | | | | | | | | | | | | | | | |_ **FVALUE_DETAILS**	-	**dtMLSTRING**	250	Yes	1.2_fd
0..1	| | | | | | | | | | | | | | | | | | | |_ **FVALUE_TYPE**	-	**dtSTRING**	20	-	2005fd
0..1	| | | | | | | | | | | | | | | | | | | |_ **FID**	-	**dtSTRING**	-	-	2005.1
0..1	| | | | | | | | | | | | | | | | | | | |_ **FPARENT_ID**	-	**dtSTRING**	-	-	2005.1
0..*	| | | | | | | | | | | | | | | | | | | |_ **FEATURE**	-	-	-	-	2005.2
1	| | | | | | | | |_ **PRODUCT_ORDER_DETAILS**	-	-	-	-	2005fd
1	| | | | | | | | | |_ SEQUENCE	-	-	-	-	-
1	| | | | | | | | | | |_ **ORDER_UNIT**	-	**dtPUNIT**	-	-	1.2_fd
0..1	| | | | | | | | | | |_ SEQUENCE	-	-	-	-	-
1	| | | | | | | | | | | |_ **CONTENT_UNIT**	-	**dtPUNIT**	-	-	1.2_fd
0..1	| | | | | | | | | | | |_ **NO_CU_PER_OU**	1	**dtNUMBER**	-	-	2005
0..1	| | | | | | | | | | | |_ **SUPPLIER_PIDREF**	-	**dtSTRING**	32	-	2005fd
0..1	| | | | | | | | | | | |_ **SUPPLIER_IDREF**	-	**dtSTRING**	250	-	2005fd
0..1	| | | | | | | | | | | |_ **PRICE_QUANTITY**	1	**dtNUMBER**	-	-	2005
0..1	| | | | | | | | | | | |_ **QUANTITY_MIN**	1	**dtFLOAT**	-	-	2005
0..1	| | | | | | | | | | | |_ **QUANTITY_INTERVAL**	1	**dtFLOAT**	-	-	2005
0..1	| | | | | | | | | | | |_ **QUANTITY_MAX**	-	**dtFLOAT**	-	-	2005fd
0..1	| | | | | | | | | | | |_ **PACKING_UNITS**	-	-	-	-	2005fd
1	| | | | | | | | | | | |_ SEQUENCE	-	-	-	-	-
1..*	| | | | | | | | | | | | |_ **PACKING_UNIT**	-	-	-	-	2005
1	| | | | | | | | | | | | |_ SEQUENCE	-	-	-	-	-
1	| | | | | | | | | | | | | |_ **QUANTITY_MIN**	1	**dtFLOAT**	-	-	2005
1	| | | | | | | | | | | | | |_ **QUANTITY_MAX**	-	**dtFLOAT**	-	-	2005fd
1	| | | | | | | | | | | | | |_ **PACKING_UNIT_CODE**	-	**dtPUNIT**	-	-	1.2_fd
0..1	| | | | | | | | | | | | | |_ **PACKING_UNIT_DESCR**	-	**dtMLSTRING**	250	Yes	2005fd
0..1	| | | | | | | | | | | | | |_ CHOICE	-	-	-	-	-
1	| | | | | | | | | | | | | | |_ **SUPPLIER_PID**	-	**dtSTRING**	32	-	2005
0..1	| | | | | | | | | | | | | | |_ SEQUENCE	-	-	-	-	-
1	| | | | | | | | | | | | | | | |_ **SUPPLIER_PIDREF**	-	**dtSTRING**	32	-	2005fd
0..1	| | | | | | | | | | | | | | | |_ **SUPPLIER_IDREF**	-	**dtSTRING**	250	-	2005fd
1..*	| | | | | | | | |_ **PRODUCT_PRICE_DETAILS**	-	-	-	-	2005fd
1	| | | | | | | | | |_ SEQUENCE	-	-	-	-	-
0..1	| | | | | | | | | | |_ CHOICE	-	-	-	-	-
0..1	| | | | | | | | | | |_ SEQUENCE	-	-	-	-	-
0..1	| | | | | | | | | | | |_ **VALID_START_DATE**	-	**dtDATETIME**	-	-	2005fd
0..1	| | | | | | | | | | | |_ **VALID_END_DATE**	-	**dtDATETIME**	-	-	2005fd
0..2	| | | | | | | | | | | |_ **DATETIME** in the context of ARTICLE_PRICE_DETAILS	-	-	-	-	-
1	| | | | | | | | | | | |_ SEQUENCE	-	-	-	-	-

Copyright © 2022 BME e.V. - BMEcat® Version 2005.2
Copyright © 2010-2021 BME e.V. - BMEcat® Version 2005.1
Copyright © 2005-2009 BME e.V. - BMEcat® Version 2005
Copyright © 1998–2004 Fraunhofer IAO, Stuttgart; Universität Essen BLI - BMEcat® Version 1.2

Amount	Element name	Default value	Data type	Field length	Lang. specific	l.chg. in ver.
1	|_ **DATE**	-	**dtDATETYPE**	-	-	-
0..1	|_ **TIME**	-	**dtTIMETYPE**	-	-	-
0..1	|_ **TIMEZONE**	-	**dtTIMEZONETYPE**	-	-	-
0..1	|_ **DAILY_PRICE**	-	**dtBOOLEAN**	-	-	-
1..*	|_ **PRODUCT_PRICE**	-	-	-	-	2005
1	|_ SEQUENCE	-	-	-	-	-
0..1	|_ CHOICE	-	-	-	-	-
0..1	|_ **PRICE_AMOUNT**	-	**dtNUMBER**	-	-	-
0..1	|_ **PRICE_FORMULA**	-	-	-	-	2005fd
1	|_ SEQUENCE	-	-	-	-	-
1	|_ **FORMULA_IDREF**	-	**dtSTRING**	60	-	2005fd
0..1	|_ **PARAMETERS**	-	-	-	-	2005fd
1	|_ SEQUENCE	-	-	-	-	-
1..*	|_ **PARAMETER**	-	-	-	-	2005fd
1	|_ SEQUENCE	-	-	-	-	-
1	|_ **PARAMETER_SYMBOLREF**	-	**dtSTRING**	60	-	2005fd
1	|_ **PARAMETER_VALUE**	-	**dtSTRING**	250	-	2005fd
0..1	|_ **PRICE_CURRENCY**	-	**dtCURRENCIES**	-	-	2005.2
0..1	|_ CHOICE	-	-	-	-	-
0..*	|_ **TAX_DETAILS**	-	-	-	-	2005
1	|_ SEQUENCE	-	-	-	-	-
0..1	|_ **CALCULATION_SEQUENCE**	1	**dtCOUNT**	-	-	2005fd
0..1	|_ **TAX_CATEGORY**	-	**dtSTRING**	80	-	2005
0..1	|_ **TAX_TYPE**	vat	**dtSTRING**	250	-	2005
0..1	|_ **TAX**	-	**dtNUMBER**	-	-	-
0..1	|_ **EXEMPTION_REASON**	-	**dtMLSTRING**	250	Yes	2005
0..1	|_ **JURISDICTION**	-	**dtMLSTRING**	250	Yes	2005
0..1	|_ **TAX**	-	**dtNUMBER**	-	-	-
0..1	|_ **PRICE_FACTOR**	1	**dtNUMBER**	-	-	2005
0..1	|_ **LOWER_BOUND**	-	**dtNUMBER**	-	-	-
0..1	|_ CHOICE	-	-	-	-	-
0..*	|_ **TERRITORY**	-	**dtCOUNTRIES**	-	-	1.2_fd
0..1	|_ **AREA_REFS**	-	-	-	-	2005fd
1	|_ SEQUENCE	-	-	-	-	-
1..*	|_ **AREA_IDREF**	-	**dtSTRING**	60	-	2005fd
0..1	|_ **PRICE_BASE**	-	-	-	-	2005fd
1	|_ SEQUENCE	-	-	-	-	-
1	|_ **PRICE_UNIT**	-	**dtPUNIT**	-	-	1.2_fd
0..1	|_ **PRICE_UNIT_FACTOR**	1	**dtFLOAT**	-	-	2005
0..*	|_ **PRICE_FLAG**	-	**dtBOOLEAN**	-	-	-
0..1	|_ **MIME_INFO**	-	-	-	-	-
1	|_ SEQUENCE	-	-	-	-	-
1..*	|_ **MIME**	-	-	-	-	-
1	|_ SEQUENCE	-	-	-	-	-
0..1	|_ **MIME_TYPE**	-	**dtSTRING**	100	-	2005.2

Copyright © 2022 BME e.V. - BMEcat® Version 2005.2
Copyright © 2010-2021 BME e.V. - BMEcat® Version 2005.1
Copyright © 2005-2009 BME e.V. - BMEcat® Version 2005
Copyright © 1998–2004 Fraunhofer IAO, Stuttgart; Universität Essen BLI - BMEcat® Version 1.2

Amount	Element name	Default value	Data type	Field length	Lang. specific	l.chg. in ver.
1	|_ **MIME_SOURCE**	-	**dtMLSTRING**	255	Yes	-
0..1	|_ **MIME_DESCR**	-	**dtMLSTRING**	250	Yes	-
0..1	|_ **MIME_ALT**	-	**dtMLSTRING**	80	Yes	2005fd
0..1	|_ **MIME_PURPOSE**	-	**dtSTRING**	20	-	2005fd
0..1	|_ **MIME_ORDER**	-	**dtINTEGER**	-	-	-
0..1	|_ **USER_DEFINED_EXTENSIONS**	-	**udxPRODUCT**	-	-	-
0..*	|_ **PRODUCT_REFERENCE**	-	-	-	-	2005
1	|_ SEQUENCE	-	-	-	-	-
1	|_ **PROD_ID_TO**	-	**dtSTRING**	80	-	2005fd
0..1	|_ **SUPPLIER_IDREF**	-	**dtSTRING**	250	-	2005fd
0..1	|_ **CATALOG_ID**	-	**dtSTRING**	20	-	-
0..1	|_ **CATALOG_VERSION**	-	**dtSTRING**	7	-	1.2_fd
0..1	|_ **REFERENCE_DESCR**	-	**dtMLSTRING**	250	Yes	2005fd
0..1	|_ **MIME_INFO**	-	-	-	-	-
1	|_ SEQUENCE	-	-	-	-	-
1..*	|_ **MIME**	-	-	-	-	-
1	|_ SEQUENCE	-	-	-	-	-
0..1	|_ **MIME_TYPE**	-	**dtSTRING**	100	-	2005.2
1	|_ **MIME_SOURCE**	-	**dtMLSTRING**	255	Yes	-
0..1	|_ **MIME_DESCR**	-	**dtMLSTRING**	250	Yes	-
0..1	|_ **MIME_ALT**	-	**dtMLSTRING**	80	Yes	2005fd
0..1	|_ **MIME_PURPOSE**	-	**dtSTRING**	20	-	2005fd
0..1	|_ **MIME_ORDER**	-	**dtINTEGER**	-	-	-
0..1	|_ **PRODUCT_CONTACTS**	-	-	-	-	2005
1	|_ SEQUENCE	-	-	-	-	-
1	|_ **PARTY_IDREF**	-	**dtSTRING**	250	-	2005fd
1..*	|_ **CONTACT_IDREF**	-	**dtSTRING**	60	-	2005
0..1	|_ **PRODUCT_IPP_DETAILS**	-	-	-	-	2005fd
1	|_ SEQUENCE	-	-	-	-	-
1..*	|_ **IPP**	-	-	-	-	2005fd
1	|_ SEQUENCE	-	-	-	-	-
1	|_ **IPP_IDREF**	-	**dtSTRING**	60	-	2005fd
1..*	|_ **IPP_OPERATION_IDREF**	-	**dtSTRING**	60	-	2005fd
0..1	|_ **IPP_RESPONSE_TIME**	-	**dtDURATION**	-	-	2005fd
0..1	|_ **IPP_URI**	-	**dtMLSTRING**	255	Yes	2005fd
0..*	|_ **IPP_PARAM**	-	-	-	-	2005fd
1	|_ SEQUENCE	-	-	-	-	-
1	|_ **IPP_PARAM_NAMEREF**	-	**dtSTRING**	100	-	2005fd
1	|_ **IPP_PARAM_VALUE**	-	**dtSTRING**	3000	-	2005fd
0..1	|_ **PRODUCT_LOGISTIC_DETAILS**	-	-	-	-	2005
1	|_ SEQUENCE	-	-	-	-	-
0..*	|_ **CUSTOMS_TARIFF_NUMBER**	-	-	-	-	2005fd
1	|_ SEQUENCE	-	-	-	-	-
1	|_ **CUSTOMS_NUMBER**	-	**dtSTRING**	60	-	2005fd
0..1	|_ CHOICE	-	-	-	-	-

Copyright © 2022 BME e.V. - BMEcat® Version 2005.2
Copyright © 2010-2021 BME e.V. - BMEcat® Version 2005.1
Copyright © 2005-2009 BME e.V. - BMEcat® Version 2005
Copyright © 1998–2004 Fraunhofer IAO, Stuttgart; Universität Essen BLI - BMEcat® Version 1.2

Amount	Element name	Default value	Data type	Field length	Lang. specific	l.chg. in ver.
0..*	|_ **TERRITORY**	-	**dtCOUNTRIES**	-	-	1.2_fd
0..1	|_ **AREA_REFS**	-	-	-	-	2005fd
1	|_ SEQUENCE	-	-	-	-	-
1..*	|_ **AREA_IDREF**	-	**dtSTRING**	60	-	2005fd
0..1	|_ **STATISTICS_FACTOR**	-	**dtNUMBER**	-	-	2005
0..*	|_ **COUNTRY_OF_ORIGIN**	-	**dtCOUNTRIES**	-	-	2005fd
0..1	|_ **PRODUCT_DIMENSIONS**	-	-	-	-	2005fd
1	|_ SEQUENCE	-	-	-	-	-
0..1	|_ **VOLUME**	-	**dtNUMBER**	-	-	2005fd
0..1	|_ **WEIGHT**	-	**dtNUMBER**	-	-	2005fd
0..1	|_ **LENGTH**	-	**dtNUMBER**	-	-	2005fd
0..1	|_ **WIDTH**	-	**dtNUMBER**	-	-	2005fd
0..1	|_ **DEPTH**	-	**dtNUMBER**	-	-	2005fd
0..*	|_ **DELIVERY_TIMES**	-	-	-	-	2005fd
1	|_ SEQUENCE	-	-	-	-	-
0..1	|_ CHOICE	-	-	-	-	-
0..*	|_ **TERRITORY**	-	**dtCOUNTRIES**	-	-	1.2_fd
0..1	|_ **AREA_REFS**	-	-	-	-	2005fd
1	|_ SEQUENCE	-	-	-	-	-
1..*	|_ **AREA_IDREF**	-	**dtSTRING**	60	-	2005fd
1..*	|_ **TIME_SPAN**	-	-	-	-	2005
1	|_ SEQUENCE	-	-	-	-	-
1	|_ **TIME_BASE**	-	**dtSTRING**	20	-	2005
0..1	|_ **TIME_VALUE_DURATION**	-	**dtSTRING**	20	-	2005
0..1	|_ **TIME_VALUE_INTERVAL**	1	**dtSTRING**	20	-	2005
0..1	|_ **TIME_VALUE_START**	-	**dtSTRING**	50	-	2005fd
0..1	|_ **TIME_VALUE_END**	-	**dtSTRING**	50	-	2005fd
0..*	|_ **SUB_TIME_SPANS**	-	-	-	-	2005
1	|_ SEQUENCE	-	-	-	-	-
1	|_ **TIME_BASE**	-	**dtSTRING**	20	-	2005
0..1	|_ **TIME_VALUE_DURATION**	-	**dtSTRING**	20	-	2005
0..1	|_ **TIME_VALUE_INTERVAL**	1	**dtSTRING**	20	-	2005
0..1	|_ **TIME_VALUE_START**	-	**dtSTRING**	50	-	2005fd
0..1	|_ **TIME_VALUE_END**	-	**dtSTRING**	50	-	2005fd
0..*	|_ **SUB_TIME_SPANS**	-	-	-	-	2005
0..1	|_ **LEADTIME**	-	**dtFLOAT**	-	-	2005fd
0..*	|_ **TRANSPORT**	-	-	-	-	2005fd
1	|_ SEQUENCE	-	-	-	-	-
1	|_ **INCOTERM**	-	**dtSTRING**	3	-	2005fd
0..1	|_ **LOCATION**	-	**dtSTRING**	250	-	2005fd
0..1	|_ **TRANSPORT_REMARK**	-	**dtMLSTRING**	64000	Yes	2005fd
0..*	|_ **MEANS_OF_TRANSPORT**	-	-	-	-	2005fd
1	|_ SEQUENCE	-	-	-	-	-
1	|_ **MEANS_OF_TRANSPORT_ID**	-	**dtSTRING**	50	-	2005fd
0..1	|_ **MEANS_OF_TRANSPORT_NAME**	-	**dtMLSTRING**	50	Yes	2005fd

Copyright © 2022 BME e.V. - BMEcat® Version 2005.2
Copyright © 2010-2021 BME e.V. - BMEcat® Version 2005.1
Copyright © 2005-2009 BME e.V. - BMEcat® Version 2005
Copyright © 1998–2004 Fraunhofer IAO, Stuttgart; Universität Essen BLI - BMEcat® Version 1.2

Amount	Element name	Default value	Data type	Field length	Lang. specific	l.chg. in ver.
0..1	|_ **PRODUCT_CONFIG_DETAILS**	-	-	-	-	2005fd
1	|_ SEQUENCE	-	-	-	-	-
1..*	|_ **CONFIG_STEP**	-	-	-	-	2005fd
1	|_ SEQUENCE	-	-	-	-	-
1	|_ **STEP_ID**	-	**dtSTRING**	60	-	2005fd
1	|_ **STEP_HEADER**	-	**dtMLSTRING**	250	Yes	2005fd
0..1	|_ **STEP_DESCR_SHORT**	-	**dtMLSTRING**	3000	Yes	2005fd
0..1	|_ **STEP_DESCR_LONG**	-	**dtMLSTRING**	64000	Yes	2005fd
0..1	|_ **STEP_ORDER**	-	**dtINTEGER**	-	-	2005fd
0..1	|_ **STEP_INTERACTION_TYPE**	force_ userinput	**dtSTRING**	20	-	2005fd
0..1	|_ **CONFIG_CODE**	-	**dtSTRING**	50	-	2005fd
0..1	|_ **PRODUCT_PRICE_DETAILS**	-	-	-	-	2005fd
1	|_ SEQUENCE	-	-	-	-	-
0..1	|_ CHOICE	-	-	-	-	-
0..1	|_ SEQUENCE	-	-	-	-	-
0..1	|_ **VALID_START_DATE**	-	**dtDATETIME**	-	-	2005fd
0..1	|_ **VALID_END_DATE**	-	**dtDATETIME**	-	-	2005fd
0..2	|_ **DATETIME** in the context of ARTICLE_PRICE_DETAILS	-	-	-	-	-
1	|_ SEQUENCE	-	-	-	-	-
1	|_ **DATE**	-	**dtDATETYPE**	-	-	-
0..1	|_ **TIME**	-	**dtTIMETYPE**	-	-	-
0..1	|_ **TIMEZONE**	-	**dtTIMEZONETYPE**	-	-	-
0..1	|_ **DAILY_PRICE**	-	**dtBOOLEAN**	-	-	-
1..*	|_ **PRODUCT_PRICE**	-	-	-	-	2005
1	|_ SEQUENCE	-	-	-	-	-
0..1	|_ CHOICE	-	-	-	-	-
0..1	|_ **PRICE_AMOUNT**	-	**dtNUMBER**	-	-	-
0..1	|_ **PRICE_FORMULA**	-	-	-	-	2005fd
1	|_ SEQUENCE	-	-	-	-	-
1	|_ **FORMULA_IDREF**	-	**dtSTRING**	60	-	2005fd
0..1	|_ **PARAMETERS**	-	-	-	-	2005fd
1	|_ SEQUENCE	-	-	-	-	-
1..*	|_ **PARAMETER**	-	-	-	-	2005fd
1	|_ SEQUENCE	-	-	-	-	-
1	|_ **PARAMETER_SYMBOLREF**	-	**dtSTRING**	60	-	2005fd
1	|_ **PARAMETER_VALUE**	-	**dtSTRING**	250	-	2005fd
0..1	|_ **PRICE_CURRENCY**	-	**dtCURRENCIES**	-	-	2005.2
0..1	|_ CHOICE	-	-	-	-	-
0..*	|_ **TAX_DETAILS**	-	-	-	-	2005
1	|_ SEQUENCE	-	-	-	-	-
0..1	|_ **CALCULATION_SEQUENCE**	1	**dtCOUNT**	-	-	2005fd
0..1	|_ **TAX_CATEGORY**	-	**dtSTRING**	80	-	2005
0..1	|_ **TAX_TYPE**	vat	**dtSTRING**	250	-	2005
0..1	|_ **TAX**	-	**dtNUMBER**	-	-	-

Copyright © 2022 BME e.V. - BMEcat® Version 2005.2
Copyright © 2010-2021 BME e.V. - BMEcat® Version 2005.1
Copyright © 2005-2009 BME e.V. - BMEcat® Version 2005
Copyright © 1998–2004 Fraunhofer IAO, Stuttgart; Universität Essen BLI - BMEcat® Version 1.2

Amount	Element name	Default value	Data type	Field length	Lang. specific	l.chg. in ver.
0..1	| | | | | | | | | | | | | | | | | | |_ **EXEMPTION_REASON**	-	**dtMLSTRING**	250	Yes	2005
0..1	| | | | | | | | | | | | | | | | | | |_ **JURISDICTION**	-	**dtMLSTRING**	250	Yes	2005
0..1	| | | | | | | | | | | | | | | | | |_ **TAX**	-	**dtNUMBER**	-	-	-
0..1	| | | | | | | | | | | | | | | | |_ **PRICE_FACTOR**	1	**dtNUMBER**	-	-	2005
0..1	| | | | | | | | | | | | | | | | |_ **LOWER_BOUND**	-	**dtNUMBER**	-	-	-
0..1	| | | | | | | | | | | | | | | | |_ CHOICE	-	-	-	-	-
0..*	| | | | | | | | | | | | | | | | | |_ **TERRITORY**	-	**dtCOUNTRIES**	-	-	1.2_fd
0..1	| | | | | | | | | | | | | | | | | |_ **AREA_REFS**	-	-	-	-	2005fd
1	| | | | | | | | | | | | | | | | | | |_ SEQUENCE	-	-	-	-	-
1..*	| | | | | | | | | | | | | | | | | | | |_ **AREA_IDREF**	-	**dtSTRING**	60	-	2005fd
0..1	| | | | | | | | | | | | | | | | | |_ **PRICE_BASE**	-	-	-	-	2005fd
1	| | | | | | | | | | | | | | | | | | |_ SEQUENCE	-	-	-	-	-
1	| | | | | | | | | | | | | | | | | | |_ **PRICE_UNIT**	-	**dtPUNIT**	-	-	1.2_fd
0..1	| | | | | | | | | | | | | | | | | | |_ **PRICE_UNIT_FACTOR**	1	**dtFLOAT**	-	-	2005
0..*	| | | | | | | | | | | | | | | | | |_ **PRICE_FLAG**	-	**dtBOOLEAN**	-	-	-
1	| | | | | | | | | | | | | | | | |_ CHOICE	-	-	-	-	-
1	| | | | | | | | | | | | | | | | |_ **CONFIG_FEATURE**	-	-	-	-	2005
1	| | | | | | | | | | | | | | | | |_ SEQUENCE	-	-	-	-	-
1	| | | | | | | | | | | | | | | | | |_ CHOICE	-	-	-	-	-
1	| | | | | | | | | | | | | | | | | |_ **FREF**	-	-	-	-	2005
1	| | | | | | | | | | | | | | | | | | |_ SEQUENCE	-	-	-	-	-
1	| | | | | | | | | | | | | | | | | | | |_ **REFERENCE_FEATURE_SYSTEM_NAME**	-	**dtSTRING**	80	-	-
1	| | | | | | | | | | | | | | | | | | | |_ **FT_IDREF**	-	**dtSTRING**	60	-	-
1	| | | | | | | | | | | | | | | | | |_ **FTEMPLATE**	-	-	-	-	2005
1	| | | | | | | | | | | | | | | | | | |_ SEQUENCE	-	-	-	-	-
1	| | | | | | | | | | | | | | | | | | | |_ **FT_ID**	-	**dtSTRING**	60	-	-
1	| | | | | | | | | | | | | | | | | | | |_ **FT_NAME**	-	**dtMLSTRING**	80	Yes	2005fd
0..1	| | | | | | | | | | | | | | | | | | | |_ **FT_SHORTNAME**	-	**dtMLSTRING**	80	Yes	2005fd
0..1	| | | | | | | | | | | | | | | | | | | |_ **FT_DESCR**	-	**dtMLSTRING**	16000	Yes	2005fd
0..1	| | | | | | | | | | | | | | | | | | | |_ **FT_VERSION**	-	-	-	-	2005fd
1	| | | | | | | | | | | | | | | | | | | |_ SEQUENCE	-	-	-	-	-
1	| | | | | | | | | | | | | | | | | | | | |_ **VERSION**	-	**dtSTRING**	20	-	2005fd
0..1	| | | | | | | | | | | | | | | | | | | | |_ **VERSION_DATE**	-	**dtDATETIME**	-	-	2005fd
0..1	| | | | | | | | | | | | | | | | | | | | |_ **REVISION**	-	**dtSTRING**	20	-	2005fd
0..1	| | | | | | | | | | | | | | | | | | | | |_ **REVISION_DATE**	-	**dtDATETIME**	-	-	2005fd
0..1	| | | | | | | | | | | | | | | | | | | | |_ **ORIGINAL_DATE**	-	**dtDATETIME**	-	-	2005fd
0..1	| | | | | | | | | | | | | | | | | | |_ CHOICE	-	-	-	-	-
0..1	| | | | | | | | | | | | | | | | | | |_ **FT_GROUP_IDREF**	-	**dtSTRING**	60	-	2005
0..1	| | | | | | | | | | | | | | | | | | |_ **FT_GROUP_NAME**	-	**dtMLSTRING**	80	Yes	2005
0..1	| | | | | | | | | | | | | | | | | |_ **FT_DEPENDENCIES**	-	-	-	-	2005
1	| | | | | | | | | | | | | | | | | | |_ SEQUENCE	-	-	-	-	-
1..*	| | | | | | | | | | | | | | | | | | | |_ **FT_IDREF**	-	**dtSTRING**	60	-	-
0..1	| | | | | | | | | | | | | | | | | |_ **FEATURE_CONTENT**	-	-	-	-	2005
1	| | | | | | | | | | | | | | | | | | |_ SEQUENCE	-	-	-	-	-
1	| | | | | | | | | | | | | | | | | | | |_ **FT_DATATYPE**	-	**dtSTRING**	20	-	-

Copyright © 2022 BME e.V. - BMEcat® Version 2005.2
Copyright © 2010-2021 BME e.V. - BMEcat® Version 2005.1
Copyright © 2005-2009 BME e.V. - BMEcat® Version 2005
Copyright © 1998–2004 Fraunhofer IAO, Stuttgart; Universität Essen BLI - BMEcat® Version 1.2

Amount	Element name	Default value	Data type	Field length	Lang. specific	l.chg. in ver.
0..1	|_ **FT_FACETS**	-	-	-	-	2005fd
1	|_ SEQUENCE	-	-	-	-	-
1..4	|_ **FT_FACET**	-	**dtSTRING**	20	-	2005fd
0..1	|_ **FT_VALUES**	-	-	-	-	2005
1	|_ SEQUENCE	-	-	-	-	-
1..*	|_ **FT_VALUE**	-	-	-	-	2005
1	|_ SEQUENCE	-	-	-	-	-
1	|_ CHOICE	-	-	-	-	-
1	|_ **VALUE_IDREF**	-	**dtSTRING**	60	-	2005fd
1	|_ **VALUE_SIMPLE**	-	**dtSTRING**	80	-	2005fd
1	|_ **VALUE_TEXT**	-	**dtMLSTRING**	80	Yes	2005fd
1	|_ **VALUE_RANGE**	-	-	-	-	2005fd
1	|_ SEQUENCE	-	-	-	-	-
1	|_ **STARTVALUE**	-	**dtNUMBER**	-	-	2005fd
1	|_ **ENDVALUE**	-	**dtNUMBER**	-	-	2005fd
0..1	|_ **INTERVALVALUE**	-	**dtNUMBER**	-	-	2005fd
0..1	|_ **MIME_INFO**	-	-	-	-	-
1	|_ SEQUENCE	-	-	-	-	-
1..*	|_ **MIME**	-	-	-	-	-
1	|_ SEQUENCE	-	-	-	-	-
0..1	|_ **MIME_TYPE**	-	**dtSTRING**	100	-	2005.2
1	|_ **MIME_SOURCE**	-	**dtMLSTRING**	255	Yes	-
0..1	|_ **MIME_DESCR**	-	**dtMLSTRING**	250	Yes	-
0..1	|_ **MIME_ALT**	-	**dtMLSTRING**	80	Yes	2005fd
0..1	|_ **MIME_PURPOSE**	-	**dtSTRING**	20	-	2005fd
0..1	|_ **MIME_ORDER**	-	**dtINTEGER**	-	-	-
0..1	|_ **CONFIG_INFO**	-	-	-	-	2005fd
1	|_ SEQUENCE	-	-	-	-	-
1	|_ **CONFIG_CODE**	-	**dtSTRING**	50	-	2005fd
0..1	|_ **PRODUCT_PRICE_DETAILS**	-	-	-	-	2005fd
1	|_ SEQUENCE	-	-	-	-	-
0..1	|_ CHOICE	-	-	-	-	-
0..1	|_ SEQUENCE	-	-	-	-	-
0..1	|_ **VALID_START_DATE**	-	**dtDATETIME**	-	-	2005fd
0..1	|_ **VALID_END_DATE**	-	**dtDATETIME**	-	-	2005fd
0..2	|_ **DATETIME** in the context of ARTICLE_PRICE_DETAILS	-	-	-	-	-
1	|_ SEQUENCE	-	-	-	-	-
1	|_ **DATE**	-	**dtDATETYPE**	-	-	-
0..1	|_ **TIME**	-	**dtTIMETYPE**	-	-	-
0..1	|_ **TIMEZONE**	-	**dtTIMEZONETYPE**	-	-	-
0..1	|_ **DAILY_PRICE**	-	**dtBOOLEAN**	-	-	-
1..*	|_ **PRODUCT_PRICE**	-	-	-	-	2005
1	|_ SEQUENCE	-	-	-	-	-
0..1	|_ CHOICE	-	-	-	-	-
0..1	|_ **PRICE_AMOUNT**	-	**dtNUMBER**	-	-	-

Copyright © 2022 BME e.V. - BMEcat® Version 2005.2
Copyright © 2010-2021 BME e.V. - BMEcat® Version 2005.1
Copyright © 2005-2009 BME e.V. - BMEcat® Version 2005
Copyright © 1998–2004 Fraunhofer IAO, Stuttgart; Universität Essen BLI - BMEcat® Version 1.2

Amount	Element name	Default value	Data type	Field length	Lang. specific	l.chg. in ver.
0..1	|_ **PRICE_FORMULA**	-	-	-	-	2005fd
1	|_ SEQUENCE	-	-	-	-	-
1	|_ **FORMULA_IDREF**	-	**dtSTRING**	60	-	2005fd
0..1	|_ **PARAMETERS**	-	-	-	-	2005fd
1	|_ SEQUENCE	-	-	-	-	-
1..*	|_ **PARAMETER**	-	-	-	-	2005fd
1	|_ SEQUENCE	-	-	-	-	-
1	|_ **PARAMETER_SYMBOLREF**	-	**dtSTRING**	60	-	2005fd
1	|_ **PARAMETER_VALUE**	-	**dtSTRING**	250	-	2005fd
0..1	|_ **PRICE_CURRENCY**	-	**dtCURRENCIES**	-	-	2005.2
0..1	|_ CHOICE	-	-	-	-	-
0..*	|_ **TAX_DETAILS**	-	-	-	-	2005
1	|_ SEQUENCE	-	-	-	-	-
0..1	|_ **CALCULATION_SEQUENCE**	1	**dtCOUNT**	-	-	2005fd
0..1	|_ **TAX_CATEGORY**	-	**dtSTRING**	80	-	2005
0..1	|_ **TAX_TYPE**	vat	**dtSTRING**	250	-	2005
0..1	|_ **TAX**	-	**dtNUMBER**	-	-	-
0..1	|_ **EXEMPTION_REASON**	-	**dtMLSTRING**	250	Yes	2005
0..1	|_ **JURISDICTION**	-	**dtMLSTRING**	250	Yes	2005
0..1	|_ **TAX**	-	**dtNUMBER**	-	-	-
0..1	|_ **PRICE_FACTOR**	1	**dtNUMBER**	-	-	2005
0..1	|_ **LOWER_BOUND**	-	**dtNUMBER**	-	-	-
0..1	|_ CHOICE	-	-	-	-	-
0..*	|_ **TERRITORY**	-	**dtCOUNTRIES**	-	-	1.2_fd
0..1	|_ **AREA_REFS**	-	-	-	-	2005fd
1	|_ SEQUENCE	-	-	-	-	-
1..*	|_ **AREA_IDREF**	-	**dtSTRING**	60	-	2005fd
0..1	|_ **PRICE_BASE**	-	-	-	-	2005fd
1	|_ SEQUENCE	-	-	-	-	-
1	|_ **PRICE_UNIT**	-	**dtPUNIT**	-	-	1.2_fd
0..1	|_ **PRICE_UNIT_FACTOR**	1	**dtFLOAT**	-	-	2005
0..*	|_ **PRICE_FLAG**	-	**dtBOOLEAN**	-	-	-
0..1	|_ **VALUE_ORDER**	-	**dtINTEGER**	-	-	2005fd
0..1	|_ **DEFAULT_FLAG**	-	**dtBOOLEAN**	-	-	2005fd
0..1	|_ **FT_VALENCY**	univalent	**dtSTRING**	20	-	2005fd
0..1	|_ CHOICE	-	-	-	-	-
0..1	|_ **FT_UNIT_IDREF**	-	**dtSTRING**	60	-	2005fd
0..1	|_ **FT_UNIT**	-	**dtSTRING**	80	-	2005fd
0..1	|_ **FT_MANDATORY**	-	**dtBOOLEAN**	-	-	-
0..1	|_ **FT_ORDER**	-	**dtINTEGER**	-	-	-
0..1	|_ **FT_SYMBOL**	-	**dtMLSTRING**	20	Yes	1.2
0..1	|_ **FT_SYNONYMS**	-	-	-	-	2005fd
1	|_ SEQUENCE	-	-	-	-	-
1	|_ **SYNONYM**	-	**dtMLSTRING**	80	Yes	2005fd
0..1	|_ **MIME_INFO**	-	-	-	-	-

Copyright © 2022 BME e.V. - BMEcat® Version 2005.2
Copyright © 2010-2021 BME e.V. - BMEcat® Version 2005.1
Copyright © 2005-2009 BME e.V. - BMEcat® Version 2005
Copyright © 1998–2004 Fraunhofer IAO, Stuttgart; Universität Essen BLI - BMEcat® Version 1.2

Amount	Element name	Default value	Data type	Field length	Lang. specific	l.chg. in ver.
1	|_ SEQUENCE	-	-	-	-	-
1..*	|_ **MIME**	-	-	-	-	-
1	|_ SEQUENCE	-	-	-	-	-
0..1	|_ **MIME_TYPE**	-	**dtSTRING**	100	-	2005.2
1	|_ **MIME_SOURCE**	-	**dtMLSTRING**	255	Yes	-
0..1	|_ **MIME_DESCR**	-	**dtMLSTRING**	250	Yes	-
0..1	|_ **MIME_ALT**	-	**dtMLSTRING**	80	Yes	2005fd
0..1	|_ **MIME_PURPOSE**	-	**dtSTRING**	20	-	2005fd
0..1	|_ **MIME_ORDER**	-	**dtINTEGER**	-	-	-
0..1	|_ **FT_SOURCE**	-	-	-	-	2005
1	|_ SEQUENCE	-	-	-	-	-
0..1	|_ **SOURCE_NAME**	-	**dtMLSTRING**	80	Yes	2005
0..1	|_ **SOURCE_URI**	-	**dtSTRING**	255	-	2005fd
0..1	|_ **PARTY_IDREF**	-	**dtSTRING**	250	-	2005fd
0..1	|_ **FT_NOTE**	-	**dtMLSTRING**	16000	Yes	2005fd
0..1	|_ **FT_REMARK**	-	**dtMLSTRING**	16000	Yes	2005fd
0..1	|_ **MIME_INFO**	-	-	-	-	-
1	|_ SEQUENCE	-	-	-	-	-
1..*	|_ **MIME**	-	-	-	-	-
1	|_ SEQUENCE	-	-	-	-	-
0..1	|_ **MIME_TYPE**	-	**dtSTRING**	100	-	2005.2
1	|_ **MIME_SOURCE**	-	**dtMLSTRING**	255	Yes	-
0..1	|_ **MIME_DESCR**	-	**dtMLSTRING**	250	Yes	-
0..1	|_ **MIME_ALT**	-	**dtMLSTRING**	80	Yes	2005fd
0..1	|_ **MIME_PURPOSE**	-	**dtSTRING**	20	-	2005fd
0..1	|_ **MIME_ORDER**	-	**dtINTEGER**	-	-	-
1	|_ **CONFIG_PARTS**	-	-	-	-	2005fd
1	|_ SEQUENCE	-	-	-	-	-
1..*	|_ **PART_ALTERNATIVE**	-	-	-	-	2005fd
1	|_ SEQUENCE	-	-	-	-	-
1	|_ **SUPPLIER_PIDREF**	-	**dtSTRING**	32	-	2005fd
0..1	|_ **SUPPLIER_IDREF**	-	**dtSTRING**	250	-	2005fd
0..1	|_ **PRODUCT_ORDER**	-	**dtINTEGER**	-	-	2005fd
0..1	|_ **DEFAULT_FLAG**	-	**dtBOOLEAN**	-	-	2005fd
0..1	|_ **CONFIG_CODE**	-	**dtSTRING**	50	-	2005fd
0..1	|_ **PRODUCT_PRICE_DETAILS**	-	-	-	-	2005fd
1	|_ SEQUENCE	-	-	-	-	-
0..1	|_ CHOICE	-	-	-	-	-
0..1	|_ SEQUENCE	-	-	-	-	-
0..1	|_ **VALID_START_DATE**	-	**dtDATETIME**	-	-	2005fd
0..1	|_ **VALID_END_DATE**	-	**dtDATETIME**	-	-	2005fd
0..2	|_ **DATETIME** in the context of ARTICLE_PRICE_DETAILS	-	-	-	-	-
1	|_ SEQUENCE	-	-	-	-	-
1	|_ **DATE**	-	**dtDATETYPE**	-	-	-
0..1	|_ **TIME**	-	**dtTIMETYPE**	-	-	-

Copyright © 2022 BME e.V. - BMEcat® Version 2005.2
Copyright © 2010-2021 BME e.V. - BMEcat® Version 2005.1
Copyright © 2005-2009 BME e.V. - BMEcat® Version 2005
Copyright © 1998–2004 Fraunhofer IAO, Stuttgart; Universität Essen BLI - BMEcat® Version 1.2

Amount	Element name	Default value	Data type	Field length	Lang. specific	l.chg. in ver.
0..1	| | | | | | | | | | | | | | | | | | | | | | |_ **TIMEZONE**	-	**dtTIMEZONETYPE**	-	-	-
0..1	| | | | | | | | | | | | | | | | | | | | | |_ **DAILY_PRICE**	-	**dtBOOLEAN**	-	-	-
1..*	| | | | | | | | | | | | | | | | | | | | | |_ **PRODUCT_PRICE**	-	-	-	-	2005
1	| | | | | | | | | | | | | | | | | | | | | |_ SEQUENCE	-	-	-	-	-
0..1	| | | | | | | | | | | | | | | | | | | | | | |_ CHOICE	-	-	-	-	-
0..1	| | | | | | | | | | | | | | | | | | | | | | | |_ **PRICE_AMOUNT**	-	**dtNUMBER**	-	-	-
0..1	| | | | | | | | | | | | | | | | | | | | | | | |_ **PRICE_FORMULA**	-	-	-	-	2005fd
1	| | | | | | | | | | | | | | | | | | | | | | | | |_ SEQUENCE	-	-	-	-	-
1	| | | | | | | | | | | | | | | | | | | | | | | | | |_ **FORMULA_IDREF**	-	**dtSTRING**	60	-	2005fd
0..1	| | | | | | | | | | | | | | | | | | | | | | | | | |_ **PARAMETERS**	-	-	-	-	2005fd
1	| | | | | | | | | | | | | | | | | | | | | | | | | | |_ SEQUENCE	-	-	-	-	-
1..*	| | | | | | | | | | | | | | | | | | | | | | | | | | | |_ **PARAMETER**	-	-	-	-	2005fd
1	| | | | | | | | | | | | | | | | | | | | | | | | | | | | |_ SEQUENCE	-	-	-	-	-
1	| | | | | | | | | | | | | | | | | | | | | | | | | | | | | |_ **PARAMETER_SYMBOLREF**	-	**dtSTRING**	60	-	2005fd
1	| | | | | | | | | | | | | | | | | | | | | | | | | | | | | |_ **PARAMETER_VALUE**	-	**dtSTRING**	250	-	2005fd
0..1	| | | | | | | | | | | | | | | | | | | | | |_ **PRICE_CURRENCY**	-	**dtCURRENCIES**	-	-	2005.2
0..1	| | | | | | | | | | | | | | | | | | | | | |_ CHOICE	-	-	-	-	-
0..*	| | | | | | | | | | | | | | | | | | | | | | |_ **TAX_DETAILS**	-	-	-	-	2005
1	| | | | | | | | | | | | | | | | | | | | | | | |_ SEQUENCE	-	-	-	-	-
0..1	| | | | | | | | | | | | | | | | | | | | | | | | |_ **CALCULATION_SEQUENCE**	1	**dtCOUNT**	-	-	2005fd
0..1	| | | | | | | | | | | | | | | | | | | | | | | | |_ **TAX_CATEGORY**	-	**dtSTRING**	80	-	2005
0..1	| | | | | | | | | | | | | | | | | | | | | | | | |_ **TAX_TYPE**	vat	**dtSTRING**	250	-	2005
0..1	| | | | | | | | | | | | | | | | | | | | | | | | |_ **TAX**	-	**dtNUMBER**	-	-	-
0..1	| | | | | | | | | | | | | | | | | | | | | | | | |_ **EXEMPTION_REASON**	-	**dtMLSTRING**	250	Yes	2005
0..1	| | | | | | | | | | | | | | | | | | | | | | | | |_ **JURISDICTION**	-	**dtMLSTRING**	250	Yes	2005
0..1	| | | | | | | | | | | | | | | | | | | | | | | |_ **TAX**	-	**dtNUMBER**	-	-	-
0..1	| | | | | | | | | | | | | | | | | | | | | | |_ **PRICE_FACTOR**	1	**dtNUMBER**	-	-	2005
0..1	| | | | | | | | | | | | | | | | | | | | | | |_ **LOWER_BOUND**	-	**dtNUMBER**	-	-	-
0..1	| | | | | | | | | | | | | | | | | | | | | | |_ CHOICE	-	-	-	-	-
0..*	| | | | | | | | | | | | | | | | | | | | | | | |_ **TERRITORY**	-	**dtCOUNTRIES**	-	-	1.2_fd
0..1	| | | | | | | | | | | | | | | | | | | | | | | |_ **AREA_REFS**	-	-	-	-	2005fd
1	| | | | | | | | | | | | | | | | | | | | | | | | |_ SEQUENCE	-	-	-	-	-
1..*	| | | | | | | | | | | | | | | | | | | | | | | | | |_ **AREA_IDREF**	-	**dtSTRING**	60	-	2005fd
0..1	| | | | | | | | | | | | | | | | | | | | | | |_ **PRICE_BASE**	-	-	-	-	2005fd
1	| | | | | | | | | | | | | | | | | | | | | | |_ SEQUENCE	-	-	-	-	-
1	| | | | | | | | | | | | | | | | | | | | | | | |_ **PRICE_UNIT**	-	**dtPUNIT**	-	-	1.2_fd
0..1	| | | | | | | | | | | | | | | | | | | | | | | |_ **PRICE_UNIT_FACTOR**	1	**dtFLOAT**	-	-	2005
0..*	| | | | | | | | | | | | | | | | | | | | | | |_ **PRICE_FLAG**	-	**dtBOOLEAN**	-	-	-
0..1	| | | | | | | | | | | | | | | | | |_ **PART_SELECTION_TYPE**	non-distinct	**dtSTRING**	20	-	2005fd
1	| | | | | | | | | | | |_ **MIN_OCCURANCE**	-	**dtCOUNT**	-	-	2005fd
1	| | | | | | | | | | | |_ **MAX_OCCURANCE**	-	**dtCOUNT**	-	-	2005fd
0..1	| | | | | | | | | | |_ **PREDEFINED_CONFIGS**	-	-	-	-	2005fd
1	| | | | | | | | | | | |_ SEQUENCE	-	-	-	-	-
1..*	| | | | | | | | | | | |_ **PREDEFINED_CONFIG**	-	-	-	-	2005fd

Copyright © 2022 BME e.V. - BMEcat® Version 2005.2
Copyright © 2010-2021 BME e.V. - BMEcat® Version 2005.1
Copyright © 2005-2009 BME e.V. - BMEcat® Version 2005
Copyright © 1998–2004 Fraunhofer IAO, Stuttgart; Universität Essen BLI - BMEcat® Version 1.2

Amount	Element name	Default value	Data type	Field length	Lang. specific	l.chg. in ver.
1	|_ SEQUENCE	-	-	-	-	-
1	|_ **PREDEFINED_CONFIG_CODE**	-	**dtSTRING**	6000	-	2005fd
0..1	|_ **PREDEFINED_CONFIG_NAME**	-	**dtMLSTRING**	100	Yes	2005fd
0..1	|_ **PREDEFINED_CONFIG_DESCR**	-	**dtMLSTRING**	250	Yes	2005fd
0..1	|_ **PREDEFINED_CONFIG_ORDER**	-	**dtINTEGER**	-	-	2005fd
0..1	|_ **PRODUCT_PRICE_DETAILS**	-	-	-	-	2005fd
1	|_ SEQUENCE	-	-	-	-	-
0..1	|_ CHOICE	-	-	-	-	-
0..1	|_ SEQUENCE	-	-	-	-	-
0..1	|_ **VALID_START_DATE**	-	**dtDATETIME**	-	-	2005fd
0..1	|_ **VALID_END_DATE**	-	**dtDATETIME**	-	-	2005fd
0..2	|_ **DATETIME** in the context of ARTICLE_PRICE_DETAILS	-	-	-	-	-
1	|_ SEQUENCE	-	-	-	-	-
1	|_ **DATE**	-	**dtDATETYPE**	-	-	-
0..1	|_ **TIME**	-	**dtTIMETYPE**	-	-	-
0..1	|_ **TIMEZONE**	-	**dtTIMEZONETYPE**	-	-	-
0..1	|_ **DAILY_PRICE**	-	**dtBOOLEAN**	-	-	-
1..*	|_ **PRODUCT_PRICE**	-	-	-	-	2005
1	|_ SEQUENCE	-	-	-	-	-
0..1	|_ CHOICE	-	-	-	-	-
0..1	|_ **PRICE_AMOUNT**	-	**dtNUMBER**	-	-	-
0..1	|_ **PRICE_FORMULA**	-	-	-	-	2005fd
1	|_ SEQUENCE	-	-	-	-	-
1	|_ **FORMULA_IDREF**	-	**dtSTRING**	60	-	2005fd
0..1	|_ **PARAMETERS**	-	-	-	-	2005fd
1	|_ SEQUENCE	-	-	-	-	-
1..*	|_ **PARAMETER**	-	-	-	-	2005fd
1	|_ SEQUENCE	-	-	-	-	-
1	|_ **PARAMETER_SYMBOLREF**	-	**dtSTRING**	60	-	2005fd
1	|_ **PARAMETER_VALUE**	-	**dtSTRING**	250	-	2005fd
0..1	|_ **PRICE_CURRENCY**	-	**dtCURRENCIES**	-	-	2005.2
0..1	|_ CHOICE	-	-	-	-	-
0..*	|_ **TAX_DETAILS**	-	-	-	-	2005
1	|_ SEQUENCE	-	-	-	-	-
0..1	|_ **CALCULATION_SEQUENCE**	1	**dtCOUNT**	-	-	2005fd
0..1	|_ **TAX_CATEGORY**	-	**dtSTRING**	80	-	2005
0..1	|_ **TAX_TYPE**	vat	**dtSTRING**	250	-	2005
0..1	|_ **TAX**	-	**dtNUMBER**	-	-	-
0..1	|_ **EXEMPTION_REASON**	-	**dtMLSTRING**	250	Yes	2005
0..1	|_ **JURISDICTION**	-	**dtMLSTRING**	250	Yes	2005
0..1	|_ **TAX**	-	**dtNUMBER**	-	-	-
0..1	|_ **PRICE_FACTOR**	1	**dtNUMBER**	-	-	2005
0..1	|_ **LOWER_BOUND**	-	**dtNUMBER**	-	-	-
0..1	|_ CHOICE	-	-	-	-	-
0..*	|_ **TERRITORY**	-	**dtCOUNTRIES**	-	-	1.2_fd

Copyright © 2022 BME e.V. - BMEcat® Version 2005.2
Copyright © 2010-2021 BME e.V. - BMEcat® Version 2005.1
Copyright © 2005-2009 BME e.V. - BMEcat® Version 2005
Copyright © 1998–2004 Fraunhofer IAO, Stuttgart; Universität Essen BLI - BMEcat® Version 1.2

Amount	Element name	Default value	Data type	Field length	Lang. specific	l.chg. in ver.
0..1	|_ **AREA_REFS**	-	-	-	-	2005fd
1	|_ SEQUENCE	-	-	-	-	-
1..*	|_ **AREA_IDREF**	-	**dtSTRING**	60	-	2005fd
0..1	|_ **PRICE_BASE**	-	-	-	-	2005fd
1	|_ SEQUENCE	-	-	-	-	-
1	|_ **PRICE_UNIT**	-	**dtPUNIT**	-	-	1.2_fd
0..1	|_ **PRICE_UNIT_FACTOR**	1	**dtFLOAT**	-	-	2005
0..*	|_ **PRICE_FLAG**	-	**dtBOOLEAN**	-	-	-
0..1	|_ **SUPPLIER_PID**	-	**dtSTRING**	32	-	2005
0..*	|_ **INTERNATIONAL_PID**	-	**dtSTRING**	100	-	2005fd
0..1	|_ **PREDEFINED_CONFIG_COVERAGE**	partial	**dtSTRING**	20	-	2005fd
0..1	|_ **CONFIG_RULES**	-	-	-	-	-
1	|_ SEQUENCE	-	-	-	-	-
1..*	|_ **TERM**	-	-	-	-	2005fd
1	|_ SEQUENCE	-	-	-	-	-
1	|_ **TERM_ID**	-	**dtSTRING**	20	-	2005fd
0..1	|_ **TERM_CONDITION**	-	**dtSTRING**	3000	-	2005fd
1	|_ **TERM_EXPRESSION**	-	**dtSTRING**	3000	-	2005fd
0..1	|_ **CONFIG_FORMULAS**	-	-	-	-	2005fd
1	|_ SEQUENCE	-	-	-	-	-
1	|_ **CONFIG_FORMULA**	-	-	-	-	2005fd
1	|_ SEQUENCE	-	-	-	-	-
1	|_ **FORMULA_IDREF**	-	**dtSTRING**	60	-	2005fd
0..1	|_ **PARAMETERS**	-	-	-	-	2005fd
1	|_ SEQUENCE	-	-	-	-	-
1..*	|_ **PARAMETER**	-	-	-	-	2005fd
1	|_ SEQUENCE	-	-	-	-	-
1	|_ **PARAMETER_SYMBOLREF**	-	**dtSTRING**	60	-	2005fd
1	|_ **PARAMETER_VALUE**	-	**dtSTRING**	250	-	2005fd
0..*	|_ **PRODUCT_TO_CATALOGGROUP_MAP** in context T_NEW_CATALOG	-	-	-	-	2005fd
1	|_ SEQUENCE	-	-	-	-	-
1	|_ **PROD_ID**	-	**dtSTRING**	32	-	-
0..1	|_ **SUPPLIER_IDREF**	-	**dtSTRING**	250	-	2005fd
1	|_ **CATALOG_GROUP_ID**	-	**dtSTRING**	50	-	-
0..1	|_ **PRODUCT_TO_CATALOGGROUP_MAP_ORDER**	-	**dtINTEGER**	-	-	1.2
1	|_ SEQUENCE	-	-	-	-	-
0..*	|_ **ARTICLE** in context T_NEW_CATALOG	-	-	-	-	-
1	|_ SEQUENCE	-	-	-	-	-
1	|_ **SUPPLIER_AID**	-	**dtSTRING**	32	-	-
0..1	|_ **SUPPLIER_IDREF**	-	**dtSTRING**	250	-	2005fd
1	|_ **ARTICLE_DETAILS**	-	-	-	-	-
1	|_ SEQUENCE	-	-	-	-	-
1	|_ **DESCRIPTION_SHORT**	-	**dtMLSTRING**	150	Yes	-
0..1	|_ **DESCRIPTION_LONG**	-	**dtMLSTRING**	64000	Yes	1.2_fd
0..1	|_ CHOICE	-	-	-	-	-

Copyright © 2022 BME e.V. - BMEcat® Version 2005.2
Copyright © 2010-2021 BME e.V. - BMEcat® Version 2005.1
Copyright © 2005-2009 BME e.V. - BMEcat® Version 2005
Copyright © 1998–2004 Fraunhofer IAO, Stuttgart; Universität Essen BLI - BMEcat® Version 1.2

Amount	Element name	Default value	Data type	Field length	Lang. specific	l.chg. in ver.
0..*	|_ **INTERNATIONAL_AID**	-	**dtSTRING**	100	-	-
0..1	|_ **EAN**	-	**dtSTRING**	14	-	-
0..1	|_ **SUPPLIER_ALT_AID**	-	**dtSTRING**	50	-	-
0..*	|_ **BUYER_AID**	-	**dtSTRING**	50	-	-
0..1	|_ **MANUFACTURER_AID**	-	**dtSTRING**	50	-	-
0..1	|_ CHOICE	-	-	-	-	-
0..1	|_ **MANUFACTURER_IDREF**	-	**dtSTRING**	250	-	2005fd
0..1	|_ **MANUFACTURER_NAME**	-	**dtSTRING**	50	-	-
0..1	|_ **MANUFACTURER_TYPE_DESCR**	-	**dtMLSTRING**	50	Yes	1.2_fd
0..1	|_ **ERP_GROUP_BUYER**	-	**dtSTRING**	10	-	-
0..1	|_ **ERP_GROUP_SUPPLIER**	-	**dtSTRING**	10	-	-
0..1	|_ **DELIVERY_TIME**	-	**dtNUMBER**	-	-	1.2_fd
0..*	|_ **SPECIAL_TREATMENT_CLASS**	-	**dtSTRING**	20	-	-
0..1	|_ **KEYWORD**	-	**dtMLSTRING**	50	Yes	-
0..1	|_ **REMARKS**	-	**dtMLSTRING**	64000	Yes	-
0..1	|_ **SEGMENT**	-	**dtMLSTRING**	100	Yes	1.2_fd
0..1	|_ **ARTICLE_ORDER**	-	**dtINTEGER**	-	-	-
0..1	|_ **ARTICLE_STATUS**	-	**dtMLSTRING**	250	Yes	-
0..*	|_ **INTERNATIONAL_RESTRICTIONS**	-	**dtSTRING**	250	-	2005fd
0..1	|_ **ACCOUNTING_INFO**	-	-	-	-	2005fd
1	|_ SEQUENCE	-	-	-	-	-
1	|_ **COST_CATEGORY_ID**	-	**dtSTRING**	64	-	2005fd
0..1	|_ **COST_TYPE**	-	**dtSTRING**	64	-	2005fd
0..1	|_ **COST_ACCOUNT**	-	**dtSTRING**	64	-	2005fd
0..1	|_ **AGREEMENT_REF**	-	-	-	-	2005fd
1	|_ SEQUENCE	-	-	-	-	-
1	|_ **AGREEMENT_IDREF**	-	**dtSTRING**	50	-	2005fd
0..1	|_ **AGREEMENT_LINE_IDREF**	-	**dtSTRING**	50	-	2005fd
0..*	|_ **ARTICLE_TYPE**	-	**dtSTRING**	50	-	-
0..1	|_ **ARTICLE_CATEGORY**	-	**dtSTRING**	20	-	-
0..*	|_ **ARTICLE_FEATURES**	-	-	-	-	-
1	|_ SEQUENCE	-	-	-	-	-
0..1	|_ **REFERENCE_FEATURE_SYSTEM_NAME**	-	**dtSTRING**	80	-	-
0..1	|_ CHOICE	-	-	-	-	-
0..*	|_ **REFERENCE_FEATURE_GROUP_ID**	-	**dtSTRING**	60	-	-
0..1	|_ **REFERENCE_FEATURE_GROUP_NAME**	-	**dtMLSTRING**	60	Yes	-
0..*	|_ **REFERENCE_FEATURE_GROUP_ID2**	-	**dtSTRING**	60	-	2005fd
0..1	|_ **CLASSIFICATION_GROUP_ARTICLEORDER**	-	**dtINTEGER**	-	-	-
0..*	|_ **FEATURE**	-	-	-	-	2005.2
1	|_ SEQUENCE	-	-	-	-	-
1	|_ CHOICE	-	-	-	-	-
1	|_ **FNAME**	-	**dtMLSTRING**	80	Yes	2005.2
1	|_ **FT_IDREF**	-	**dtSTRING**	60	-	-
1	|_ **FTEMPLATE**	-	-	-	-	2005
1	|_ SEQUENCE	-	-	-	-	-

Copyright © 2022 BME e.V. - BMEcat® Version 2005.2
Copyright © 2010-2021 BME e.V. - BMEcat® Version 2005.1
Copyright © 2005-2009 BME e.V. - BMEcat® Version 2005
Copyright © 1998–2004 Fraunhofer IAO, Stuttgart; Universität Essen BLI - BMEcat® Version 1.2

Amount	Element name	Default value	Data type	Field length	Lang. specific	l.chg. in ver.
1	|_ **FT_ID**	-	**dtSTRING**	60	-	-
1	|_ **FT_NAME**	-	**dtMLSTRING**	80	Yes	2005fd
0..1	|_ **FT_SHORTNAME**	-	**dtMLSTRING**	80	Yes	2005fd
0..1	|_ **FT_DESCR**	-	**dtMLSTRING**	16000	Yes	2005fd
0..1	|_ **FT_VERSION**	-	-	-	-	2005fd
1	|_ SEQUENCE	-	-	-	-	-
1	|_ **VERSION**	-	**dtSTRING**	20	-	2005fd
0..1	|_ **VERSION_DATE**	-	**dtDATETIME**	-	-	2005fd
0..1	|_ **REVISION**	-	**dtSTRING**	20	-	2005fd
0..1	|_ **REVISION_DATE**	-	**dtDATETIME**	-	-	2005fd
0..1	|_ **ORIGINAL_DATE**	-	**dtDATETIME**	-	-	2005fd
0..1	|_ CHOICE	-	-	-	-	-
0..1	|_ **FT_GROUP_IDREF**	-	**dtSTRING**	60	-	2005
0..1	|_ **FT_GROUP_NAME**	-	**dtMLSTRING**	80	Yes	2005
0..1	|_ **FT_DEPENDENCIES**	-	-	-	-	2005
1	|_ SEQUENCE	-	-	-	-	-
1..*	|_ **FT_IDREF**	-	**dtSTRING**	60	-	-
0..1	|_ **FEATURE_CONTENT**	-	-	-	-	2005
1	|_ SEQUENCE	-	-	-	-	-
1	|_ **FT_DATATYPE**	-	**dtSTRING**	20	-	-
0..1	|_ **FT_FACETS**	-	-	-	-	2005fd
1	|_ SEQUENCE	-	-	-	-	-
1..4	|_ **FT_FACET**	-	**dtSTRING**	20	-	2005fd
0..1	|_ **FT_VALUES**	-	-	-	-	2005
1	|_ SEQUENCE	-	-	-	-	-
1..*	|_ **FT_VALUE**	-	-	-	-	2005
1	|_ SEQUENCE	-	-	-	-	-
1	|_ CHOICE	-	-	-	-	-
1	|_ **VALUE_IDREF**	-	**dtSTRING**	60	-	2005fd
1	|_ **VALUE_SIMPLE**	-	**dtSTRING**	80	-	2005fd
1	|_ **VALUE_TEXT**	-	**dtMLSTRING**	80	Yes	2005fd
1	|_ **VALUE_RANGE**	-	-	-	-	2005fd
1	|_ SEQUENCE	-	-	-	-	-
1	|_ **STARTVALUE**	-	**dtNUMBER**	-	-	2005fd
1	|_ **ENDVALUE**	-	**dtNUMBER**	-	-	2005fd
0..1	|_ **INTERVALVALUE**	-	**dtNUMBER**	-	-	2005fd
0..1	|_ **MIME_INFO**	-	-	-	-	-
1	|_ SEQUENCE	-	-	-	-	-
1..*	|_ **MIME**	-	-	-	-	-
1	|_ SEQUENCE	-	-	-	-	-
0..1	|_ **MIME_TYPE**	-	**dtSTRING**	100	-	2005.2
1	|_ **MIME_SOURCE**	-	**dtMLSTRING**	255	Yes	-
0..1	|_ **MIME_DESCR**	-	**dtMLSTRING**	250	Yes	-
0..1	|_ **MIME_ALT**	-	**dtMLSTRING**	80	Yes	2005fd
0..1	|_ **MIME_PURPOSE**	-	**dtSTRING**	20	-	2005fd

Copyright © 2022 BME e.V. - BMEcat® Version 2005.2
Copyright © 2010-2021 BME e.V. - BMEcat® Version 2005.1
Copyright © 2005-2009 BME e.V. - BMEcat® Version 2005
Copyright © 1998–2004 Fraunhofer IAO, Stuttgart; Universität Essen BLI - BMEcat® Version 1.2

Amount	Element name	Default value	Data type	Field length	Lang. specific	l.chg. in ver.
0..1	|_ **MIME_ORDER**	-	**dtINTEGER**	-	-	-
0..1	|_ **CONFIG_INFO**	-	-	-	-	2005fd
1	|_ SEQUENCE	-	-	-	-	-
1	|_ **CONFIG_CODE**	-	**dtSTRING**	50	-	2005fd
0..1	|_ **PRODUCT_PRICE_DETAILS**	-	-	-	-	2005fd
1	|_ SEQUENCE	-	-	-	-	-
0..1	|_ CHOICE	-	-	-	-	-
0..1	|_ SEQUENCE	-	-	-	-	-
0..1	|_ **VALID_START_DATE**	-	**dtDATETIME**	-	-	2005fd
0..1	|_ **VALID_END_DATE**	-	**dtDATETIME**	-	-	2005fd
0..2	|_ **DATETIME** in the context of ARTICLE_PRICE_DETAILS	-	-	-	-	-
1	|_ SEQUENCE	-	-	-	-	-
1	|_ **DATE**	-	**dtDATETYPE**	-	-	-
0..1	|_ **TIME**	-	**dtTIMETYPE**	-	-	-
0..1	|_ **TIMEZONE**	-	**dtTIMEZONETYPE**	-	-	-
0..1	|_ **DAILY_PRICE**	-	**dtBOOLEAN**	-	-	-
1..*	|_ **PRODUCT_PRICE**	-	-	-	-	2005
1	|_ SEQUENCE	-	-	-	-	-
0..1	|_ CHOICE	-	-	-	-	-
0..1	|_ **PRICE_AMOUNT**	-	**dtNUMBER**	-	-	-
0..1	|_ **PRICE_FORMULA**	-	-	-	-	2005fd
1	|_ SEQUENCE	-	-	-	-	-
1	|_ **FORMULA_IDREF**	-	**dtSTRING**	60	-	2005fd
0..1	|_ **PARAMETERS**	-	-	-	-	2005fd
1	|_ SEQUENCE	-	-	-	-	-
1..*	|_ **PARAMETER**	-	-	-	-	2005fd
1	|_ SEQUENCE	-	-	-	-	-
1	|_ **PARAMETER_SYMBOLREF**	-	**dtSTRING**	60	-	2005fd
1	|_ **PARAMETER_VALUE**	-	**dtSTRING**	250	-	2005fd
0..1	|_ **PRICE_CURRENCY**	-	**dtCURRENCIES**	-	-	2005.2
0..1	|_ CHOICE	-	-	-	-	-
0..*	|_ **TAX_DETAILS**	-	-	-	-	2005
1	|_ SEQUENCE	-	-	-	-	-
0..1	|_ **CALCULATION_SEQUENCE**	1	**dtCOUNT**	-	-	2005fd
0..1	|_ **TAX_CATEGORY**	-	**dtSTRING**	80	-	2005
0..1	|_ **TAX_TYPE**	vat	**dtSTRING**	250	-	2005
0..1	|_ **TAX**	-	**dtNUMBER**	-	-	-
0..1	|_ **EXEMPTION_REASON**	-	**dtMLSTRING**	250	Yes	2005
0..1	|_ **JURISDICTION**	-	**dtMLSTRING**	250	Yes	2005
0..1	|_ **TAX**	-	**dtNUMBER**	-	-	-
0..1	|_ **PRICE_FACTOR**	1	**dtNUMBER**	-	-	2005
0..1	|_ **LOWER_BOUND**	-	**dtNUMBER**	-	-	-
0..1	|_ CHOICE	-	-	-	-	-
0..*	|_ **TERRITORY**	-	**dtCOUNTRIES**	-	-	1.2_fd
0..1	|_ **AREA_REFS**	-	-	-	-	2005fd

Copyright © 2022 BME e.V. - BMEcat® Version 2005.2
Copyright © 2010-2021 BME e.V. - BMEcat® Version 2005.1
Copyright © 2005-2009 BME e.V. - BMEcat® Version 2005
Copyright © 1998–2004 Fraunhofer IAO, Stuttgart; Universität Essen BLI - BMEcat® Version 1.2

Amount	Element name	Default value	Data type	Field length	Lang. specific	l.chg. in ver.
1	|_ SEQUENCE	-	-	-	-	-
1..*	|_ **AREA_IDREF**	-	**dtSTRING**	60	-	2005fd
0..1	|_ **PRICE_BASE**	-	-	-	-	2005fd
1	|_ SEQUENCE	-	-	-	-	-
1	|_ **PRICE_UNIT**	-	**dtPUNIT**	-	-	1.2_fd
0..1	|_ **PRICE_UNIT_FACTOR**	1	**dtFLOAT**	-	-	2005
0..*	|_ **PRICE_FLAG**	-	**dtBOOLEAN**	-	-	-
0..1	|_ **VALUE_ORDER**	-	**dtINTEGER**	-	-	2005fd
0..1	|_ **DEFAULT_FLAG**	-	**dtBOOLEAN**	-	-	2005fd
0..1	|_ **FT_VALENCY**	univalent	**dtSTRING**	20	-	2005fd
0..1	|_ CHOICE	-	-	-	-	-
0..1	|_ **FT_UNIT_IDREF**	-	**dtSTRING**	60	-	2005fd
0..1	|_ **FT_UNIT**	-	**dtSTRING**	80	-	2005fd
0..1	|_ **FT_MANDATORY**	-	**dtBOOLEAN**	-	-	-
0..1	|_ **FT_ORDER**	-	**dtINTEGER**	-	-	-
0..1	|_ **FT_SYMBOL**	-	**dtMLSTRING**	20	Yes	1.2
0..1	|_ **FT_SYNONYMS**	-	-	-	-	2005fd
1	|_ SEQUENCE	-	-	-	-	-
1	|_ **SYNONYM**	-	**dtMLSTRING**	80	Yes	2005fd
0..1	|_ **MIME_INFO**	-	-	-	-	-
1	|_ SEQUENCE	-	-	-	-	-
1..*	|_ **MIME**	-	-	-	-	-
1	|_ SEQUENCE	-	-	-	-	-
0..1	|_ **MIME_TYPE**	-	**dtSTRING**	100	-	2005.2
1	|_ **MIME_SOURCE**	-	**dtMLSTRING**	255	Yes	-
0..1	|_ **MIME_DESCR**	-	**dtMLSTRING**	250	Yes	-
0..1	|_ **MIME_ALT**	-	**dtMLSTRING**	80	Yes	2005fd
0..1	|_ **MIME_PURPOSE**	-	**dtSTRING**	20	-	2005fd
0..1	|_ **MIME_ORDER**	-	**dtINTEGER**	-	-	-
0..1	|_ **FT_SOURCE**	-	-	-	-	2005
1	|_ SEQUENCE	-	-	-	-	-
0..1	|_ **SOURCE_NAME**	-	**dtMLSTRING**	80	Yes	2005
0..1	|_ **SOURCE_URI**	-	**dtSTRING**	255	-	2005fd
0..1	|_ **PARTY_IDREF**	-	**dtSTRING**	250	-	2005fd
0..1	|_ **FT_NOTE**	-	**dtMLSTRING**	16000	Yes	2005fd
0..1	|_ **FT_REMARK**	-	**dtMLSTRING**	16000	Yes	2005fd
1	|_ CHOICE	-	-	-	-	-
1..*	|_ CHOICE	-	-	-	-	-
1	|_ **FVALUE**	-	**dtMLSTRING**	-	Yes	2005.1
1..*	|_ **VALUE_IDREF**	-	**dtSTRING**	60	-	2005fd
1	|_ **VARIANTS**	-	-	-	-	1.2_fd
1	|_ SEQUENCE	-	-	-	-	-
1..*	|_ **VARIANT**	-	-	-	-	-
1	|_ SEQUENCE	-	-	-	-	-
1	|_ CHOICE	-	-	-	-	-

Copyright © 2022 BME e.V. - BMEcat® Version 2005.2
Copyright © 2010-2021 BME e.V. - BMEcat® Version 2005.1
Copyright © 2005-2009 BME e.V. - BMEcat® Version 2005
Copyright © 1998–2004 Fraunhofer IAO, Stuttgart; Universität Essen BLI - BMEcat® Version 1.2

Amount	Element name	Default value	Data type	Field length	Lang. specific	l.chg. in ver.
1	|_ **FVALUE**	-	**dtMLSTRING**	-	Yes	2005.1
1..*	|_ **VALUE_IDREF**	-	**dtSTRING**	60	-	2005fd
1	|_ **SUPPLIER_AID_SUPPLEMENT**	-	**dtSTRING**	31	-	-
1	|_ **VORDER**	-	**dtINTEGER**	-	-	-
0..1	|_ **FUNIT**	-	**dtSTRING**	20	-	-
0..1	|_ **FORDER**	-	**dtINTEGER**	-	-	-
0..1	|_ **FDESCR**	-	**dtMLSTRING**	250	Yes	1.2_fd
0..1	|_ **FVALUE_DETAILS**	-	**dtMLSTRING**	250	Yes	1.2_fd
0..1	|_ **FVALUE_TYPE**	-	**dtSTRING**	20	-	2005fd
0..1	|_ **FID**	-	**dtSTRING**	-	-	2005.1
0..1	|_ **FPARENT_ID**	-	**dtSTRING**	-	-	2005.1
0..*	|_ **FEATURE**	-	-	-	-	2005.2
1	|_ **ARTICLE_ORDER_DETAILS**	-	-	-	-	-
1	|_ SEQUENCE	-	-	-	-	-
1	|_ **ORDER_UNIT**	-	**dtPUNIT**	-	-	1.2_fd
0..1	|_ SEQUENCE	-	-	-	-	-
1	|_ **CONTENT_UNIT**	-	**dtPUNIT**	-	-	1.2_fd
0..1	|_ **NO_CU_PER_OU**	1	**dtNUMBER**	-	-	2005
0..1	|_ **SUPPLIER_PIDREF**	-	**dtSTRING**	32	-	2005fd
0..1	|_ **SUPPLIER_IDREF**	-	**dtSTRING**	250	-	2005fd
0..1	|_ **PRICE_QUANTITY**	1	**dtNUMBER**	-	-	2005
0..1	|_ **QUANTITY_MIN**	1	**dtFLOAT**	-	-	2005
0..1	|_ **QUANTITY_INTERVAL**	1	**dtFLOAT**	-	-	2005
0..1	|_ **QUANTITY_MAX**	-	**dtFLOAT**	-	-	2005fd
0..1	|_ **PACKING_UNITS**	-	-	-	-	2005fd
1	|_ SEQUENCE	-	-	-	-	-
1..*	|_ **PACKING_UNIT**	-	-	-	-	2005
1	|_ SEQUENCE	-	-	-	-	-
1	|_ **QUANTITY_MIN**	1	**dtFLOAT**	-	-	2005
1	|_ **QUANTITY_MAX**	-	**dtFLOAT**	-	-	2005fd
1	|_ **PACKING_UNIT_CODE**	-	**dtPUNIT**	-	-	1.2_fd
0..1	|_ **PACKING_UNIT_DESCR**	-	**dtMLSTRING**	250	Yes	2005fd
0..1	|_ CHOICE	-	-	-	-	-
1	|_ **SUPPLIER_PID**	-	**dtSTRING**	32	-	2005
0..1	|_ SEQUENCE	-	-	-	-	-
1	|_ **SUPPLIER_PIDREF**	-	**dtSTRING**	32	-	2005fd
0..1	|_ **SUPPLIER_IDREF**	-	**dtSTRING**	250	-	2005fd
1..*	|_ **ARTICLE_PRICE_DETAILS**	-	-	-	-	-
1	|_ SEQUENCE	-	-	-	-	-
1	|_ CHOICE	-	-	-	-	-
0..1	|_ SEQUENCE	-	-	-	-	-
0..1	|_ **VALID_START_DATE**	-	**dtDATETIME**	-	-	2005fd
0..1	|_ **VALID_END_DATE**	-	**dtDATETIME**	-	-	2005fd
0..2	|_ **DATETIME** in the context of CATALOG	-	-	-	-	-
1	|_ SEQUENCE	-	-	-	-	-

Copyright © 2022 BME e.V. - BMEcat® Version 2005.2
Copyright © 2010-2021 BME e.V. - BMEcat® Version 2005.1
Copyright © 2005-2009 BME e.V. - BMEcat® Version 2005
Copyright © 1998–2004 Fraunhofer IAO, Stuttgart; Universität Essen BLI - BMEcat® Version 1.2

Amount	Element name	Default value	Data type	Field length	Lang. specific	l.chg. in ver.
1	|_ **DATE**	-	**dtDATETYPE**	-	-	-
0..1	|_ **TIME**	-	**dtTIMETYPE**	-	-	-
0..1	|_ **TIMEZONE**	-	**dtTIMEZONETYPE**	-	-	-
0..1	|_ **DAILY_PRICE**	-	**dtBOOLEAN**	-	-	-
1..*	|_ **ARTICLE_PRICE**	-	-	-	-	-
1	|_ SEQUENCE	-	-	-	-	-
0..1	|_ CHOICE	-	-	-	-	-
0..1	|_ **PRICE_AMOUNT**	-	**dtNUMBER**	-	-	-
0..1	|_ **PRICE_FORMULA**	-	-	-	-	2005fd
1	|_ SEQUENCE	-	-	-	-	-
1	|_ **FORMULA_IDREF**	-	**dtSTRING**	60	-	2005fd
0..1	|_ **PARAMETERS**	-	-	-	-	2005fd
1	|_ SEQUENCE	-	-	-	-	-
1..*	|_ **PARAMETER**	-	-	-	-	2005fd
1	|_ SEQUENCE	-	-	-	-	-
1	|_ **PARAMETER_SYMBOLREF**	-	**dtSTRING**	60	-	2005fd
1	|_ **PARAMETER_VALUE**	-	**dtSTRING**	250	-	2005fd
0..1	|_ **PRICE_CURRENCY**	-	**dtCURRENCIES**	-	-	2005.2
0..1	|_ CHOICE	-	-	-	-	-
0..*	|_ **TAX_DETAILS**	-	-	-	-	2005
1	|_ SEQUENCE	-	-	-	-	-
0..1	|_ **CALCULATION_SEQUENCE**	1	**dtCOUNT**	-	-	2005fd
0..1	|_ **TAX_CATEGORY**	-	**dtSTRING**	80	-	2005
0..1	|_ **TAX_TYPE**	vat	**dtSTRING**	250	-	2005
0..1	|_ **TAX**	-	**dtNUMBER**	-	-	-
0..1	|_ **EXEMPTION_REASON**	-	**dtMLSTRING**	250	Yes	2005
0..1	|_ **JURISDICTION**	-	**dtMLSTRING**	250	Yes	2005
0..1	|_ **TAX**	-	**dtNUMBER**	-	-	-
0..1	|_ **PRICE_FACTOR**	1	**dtNUMBER**	-	-	2005
0..1	|_ **LOWER_BOUND**	-	**dtNUMBER**	-	-	-
0..1	|_ CHOICE	-	-	-	-	-
0..*	|_ **TERRITORY**	-	**dtCOUNTRIES**	-	-	1.2_fd
0..1	|_ **AREA_REFS**	-	-	-	-	2005fd
1	|_ SEQUENCE	-	-	-	-	-
1..*	|_ **AREA_IDREF**	-	**dtSTRING**	60	-	2005fd
0..1	|_ **PRICE_BASE**	-	-	-	-	2005fd
1	|_ SEQUENCE	-	-	-	-	-
1	|_ **PRICE_UNIT**	-	**dtPUNIT**	-	-	1.2_fd
0..1	|_ **PRICE_UNIT_FACTOR**	1	**dtFLOAT**	-	-	2005
0..*	|_ **PRICE_FLAG**	-	**dtBOOLEAN**	-	-	-
0..1	|_ **LEADTIME**	-	**dtFLOAT**	-	-	2005fd
0..1	|_ **MIME_INFO**	-	-	-	-	-
1	|_ SEQUENCE	-	-	-	-	-
1..*	|_ **MIME**	-	-	-	-	-
1	|_ SEQUENCE	-	-	-	-	-

Copyright © 2022 BME e.V. - BMEcat® Version 2005.2
Copyright © 2010-2021 BME e.V. - BMEcat® Version 2005.1
Copyright © 2005-2009 BME e.V. - BMEcat® Version 2005
Copyright © 1998–2004 Fraunhofer IAO, Stuttgart; Universität Essen BLI - BMEcat® Version 1.2

Amount	Element name	Default value	Data type	Field length	Lang. specific	l.chg. in ver.
0..1	| | | | | | | | | | | | |_ **MIME_TYPE**	-	**dtSTRING**	100	-	2005.2
1	| | | | | | | | | | | | |_ **MIME_SOURCE**	-	**dtMLSTRING**	255	Yes	-
0..1	| | | | | | | | | | | | |_ **MIME_DESCR**	-	**dtMLSTRING**	250	Yes	-
0..1	| | | | | | | | | | | | |_ **MIME_ALT**	-	**dtMLSTRING**	80	Yes	2005fd
0..1	| | | | | | | | | | | | |_ **MIME_PURPOSE**	-	**dtSTRING**	20	-	2005fd
0..1	| | | | | | | | | | | | |_ **MIME_ORDER**	-	**dtINTEGER**	-	-	-
0..1	| | | | | | | | |_ **USER_DEFINED_EXTENSIONS**	-	**udxPRODUCT**	-	-	-
0..*	| | | | | | | | |_ **ARTICLE_REFERENCE**	-	-	-	-	-
1	| | | | | | | | | |_ SEQUENCE	-	-	-	-	-
1	| | | | | | | | | | |_ **ART_ID_TO**	-	**dtSTRING**	80	-	-
0..1	| | | | | | | | | | |_ **SUPPLIER_IDREF**	-	**dtSTRING**	250	-	2005fd
0..1	| | | | | | | | | | |_ **CATALOG_ID**	-	**dtSTRING**	20	-	-
0..1	| | | | | | | | | | |_ **CATALOG_VERSION**	-	**dtSTRING**	7	-	1.2_fd
0..1	| | | | | | | | | | |_ **REFERENCE_DESCR**	-	**dtMLSTRING**	250	Yes	2005fd
0..1	| | | | | | | | |_ **ARTICLE_CONTACTS**	-	-	-	-	-
1	| | | | | | | | | |_ SEQUENCE	-	-	-	-	-
1	| | | | | | | | | | |_ **PARTY_IDREF**	-	**dtSTRING**	250	-	2005fd
1..*	| | | | | | | | | | |_ **CONTACT_IDREF**	-	**dtSTRING**	60	-	2005
0..1	| | | | | | | | |_ **ARTICLE_LOGISTIC_DETAILS**	-	-	-	-	-
1	| | | | | | | | | |_ SEQUENCE	-	-	-	-	-
0..*	| | | | | | | | | | |_ **CUSTOMS_TARIFF_NUMBER**	-	-	-	-	2005fd
1	| | | | | | | | | | | |_ SEQUENCE	-	-	-	-	-
1	| | | | | | | | | | | | |_ **CUSTOMS_NUMBER**	-	**dtSTRING**	60	-	2005fd
0..1	| | | | | | | | | | | | |_ CHOICE	-	-	-	-	-
0..*	| | | | | | | | | | | | | |_ **TERRITORY**	-	**dtCOUNTRIES**	-	-	1.2_fd
0..1	| | | | | | | | | | | | | |_ **AREA_REFS**	-	-	-	-	2005fd
1	| | | | | | | | | | | | | | |_ SEQUENCE	-	-	-	-	-
1..*	| | | | | | | | | | | | | | | |_ **AREA_IDREF**	-	**dtSTRING**	60	-	2005fd
0..1	| | | | | | | | | | |_ **STATISTICS_FACTOR**	-	**dtNUMBER**	-	-	2005
0..*	| | | | | | | | | | |_ **COUNTRY_OF_ORIGIN**	-	**dtCOUNTRIES**	-	-	2005fd
0..1	| | | | | | | | | | |_ **PRODUCT_DIMENSIONS**	-	-	-	-	2005fd
1	| | | | | | | | | | | |_ SEQUENCE	-	-	-	-	-
0..1	| | | | | | | | | | | | |_ **VOLUME**	-	**dtNUMBER**	-	-	2005fd
0..1	| | | | | | | | | | | | |_ **WEIGHT**	-	**dtNUMBER**	-	-	2005fd
0..1	| | | | | | | | | | | | |_ **LENGTH**	-	**dtNUMBER**	-	-	2005fd
0..1	| | | | | | | | | | | | |_ **WIDTH**	-	**dtNUMBER**	-	-	2005fd
0..1	| | | | | | | | | | | | |_ **DEPTH**	-	**dtNUMBER**	-	-	2005fd
0..*	| | | | | | | | | | |_ **DELIVERY_TIMES**	-	-	-	-	2005fd
1	| | | | | | | | | | | |_ SEQUENCE	-	-	-	-	-
0..1	| | | | | | | | | | | | |_ CHOICE	-	-	-	-	-
0..*	| | | | | | | | | | | | | |_ **TERRITORY**	-	**dtCOUNTRIES**	-	-	1.2_fd
0..1	| | | | | | | | | | | | | |_ **AREA_REFS**	-	-	-	-	2005fd
1	| | | | | | | | | | | | | | |_ SEQUENCE	-	-	-	-	-
1..*	| | | | | | | | | | | | | | | |_ **AREA_IDREF**	-	**dtSTRING**	60	-	2005fd
1..*	| | | | | | | | | | | | | |_ **TIME_SPAN**	-	-	-	-	2005

Copyright © 2022 BME e.V. - BMEcat® Version 2005.2
Copyright © 2010-2021 BME e.V. - BMEcat® Version 2005.1
Copyright © 2005-2009 BME e.V. - BMEcat® Version 2005
Copyright © 1998–2004 Fraunhofer IAO, Stuttgart; Universität Essen BLI - BMEcat® Version 1.2

Amount	Element name	Default value	Data type	Field length	Lang. specific	l.chg. in ver.
1	| | | | | | | | | | | | | |_ SEQUENCE	-	-	-	-	-
1	| | | | | | | | | | | | | |_ **TIME_BASE**	-	**dtSTRING**	20	-	2005
0..1	| | | | | | | | | | | | | |_ **TIME_VALUE_DURATION**	-	**dtSTRING**	20	-	2005
0..1	| | | | | | | | | | | | | |_ **TIME_VALUE_INTERVAL**	1	**dtSTRING**	20	-	2005
0..1	| | | | | | | | | | | | | |_ **TIME_VALUE_START**	-	**dtSTRING**	50	-	2005fd
0..1	| | | | | | | | | | | | | |_ **TIME_VALUE_END**	-	**dtSTRING**	50	-	2005fd
0..*	| | | | | | | | | | | | | |_ **SUB_TIME_SPANS**	-	-	-	-	2005
1	| | | | | | | | | | | | | | |_ SEQUENCE	-	-	-	-	-
1	| | | | | | | | | | | | | | |_ **TIME_BASE**	-	**dtSTRING**	20	-	2005
0..1	| | | | | | | | | | | | | | |_ **TIME_VALUE_DURATION**	-	**dtSTRING**	20	-	2005
0..1	| | | | | | | | | | | | | | |_ **TIME_VALUE_INTERVAL**	1	**dtSTRING**	20	-	2005
0..1	| | | | | | | | | | | | | | |_ **TIME_VALUE_START**	-	**dtSTRING**	50	-	2005fd
0..1	| | | | | | | | | | | | | | |_ **TIME_VALUE_END**	-	**dtSTRING**	50	-	2005fd
0..*	| | | | | | | | | | | | | | |_ **SUB_TIME_SPANS**	-	-	-	-	2005
0..1	| | | | | | | | | | | |_ **LEADTIME**	-	**dtFLOAT**	-	-	2005fd
0..*	| | | | | | | | | | |_ **TRANSPORT**	-	-	-	-	2005fd
1	| | | | | | | | | | | |_ SEQUENCE	-	-	-	-	-
1	| | | | | | | | | | | |_ **INCOTERM**	-	**dtSTRING**	3	-	2005fd
0..1	| | | | | | | | | | | |_ **LOCATION**	-	**dtSTRING**	250	-	2005fd
0..1	| | | | | | | | | | | |_ **TRANSPORT_REMARK**	-	**dtMLSTRING**	64000	Yes	2005fd
0..*	| | | | | | | | | | |_ **MEANS_OF_TRANSPORT**	-	-	-	-	2005fd
1	| | | | | | | | | | | |_ SEQUENCE	-	-	-	-	-
1	| | | | | | | | | | | |_ **MEANS_OF_TRANSPORT_ID**	-	**dtSTRING**	50	-	2005fd
0..1	| | | | | | | | | | | |_ **MEANS_OF_TRANSPORT_NAME**	-	**dtMLSTRING**	50	Yes	2005fd
0..*	| | | | | | |_ **ARTICLE_TO_CATALOGGROUP_MAP**in context T_NEW_CATALOG	-	-	-	-	-
1	| | | | | | | |_ SEQUENCE	-	-	-	-	-
1	| | | | | | | | |_ **ART_ID**	-	**dtSTRING**	32	-	-
0..1	| | | | | | | | |_ **SUPPLIER_IDREF**	-	**dtSTRING**	250	-	2005fd
1	| | | | | | | | |_ **CATALOG_GROUP_ID**	-	**dtSTRING**	50	-	-
0..1	| | | | | | | | |_ **ARTICLE_TO_CATALOGGROUP_MAP_ORDER**	-	**dtINTEGER**	-	-	-
1	| | |_ **T_UPDATE_PRODUCTS**	-	-	-	-	2005
1	| | | |_ SEQUENCE	-	-	-	-	-
0..1	| | | | |_ **FORMULAS**	-	-	-	-	2005fd
1	| | | | | |_ SEQUENCE	-	-	-	-	-
1..*	| | | | | | |_ **FORMULA**	-	-	-	-	2005fd
1	| | | | | | | |_ SEQUENCE	-	-	-	-	-
1	| | | | | | | | |_ **FORMULA_ID**	-	**dtSTRING**	60	-	2005fd
0..1	| | | | | | | | |_ **FORMULA_VERSION**	-	-	-	-	2005fd
1	| | | | | | | | | |_ SEQUENCE	-	-	-	-	-
1	| | | | | | | | | | |_ **VERSION**	-	**dtSTRING**	20	-	2005fd
0..1	| | | | | | | | | | |_ **VERSION_DATE**	-	**dtDATETIME**	-	-	2005fd
0..1	| | | | | | | | | | |_ **REVISION**	-	**dtSTRING**	20	-	2005fd
0..1	| | | | | | | | | | |_ **REVISION_DATE**	-	**dtDATETIME**	-	-	2005fd
0..1	| | | | | | | | | | |_ **ORIGINAL_DATE**	-	**dtDATETIME**	-	-	2005fd
0..1	| | | | | | | | |_ **FORMULA_NAME**	-	**dtMLSTRING**	100	Yes	2005fd

Copyright © 2022 BME e.V. - BMEcat® Version 2005.2
Copyright © 2010-2021 BME e.V. - BMEcat® Version 2005.1
Copyright © 2005-2009 BME e.V. - BMEcat® Version 2005
Copyright © 1998–2004 Fraunhofer IAO, Stuttgart; Universität Essen BLI - BMEcat® Version 1.2

Amount	Element name	Default value	Data type	Field length	Lang. specific	l.chg. in ver.
0..1	| | | | | | | | |_ **FORMULA_DESCR**	-	**dtMLSTRING**	250	Yes	2005fd
0..1	| | | | | | | | |_ **FORMULA_SOURCE**	-	-	-	-	2005
1	| | | | | | | | | |_ SEQUENCE	-	-	-	-	-
0..1	| | | | | | | | | | |_ **SOURCE_NAME**	-	**dtMLSTRING**	80	Yes	2005
0..1	| | | | | | | | | | |_ **SOURCE_URI**	-	**dtSTRING**	255	-	2005fd
0..1	| | | | | | | | | | |_ **PARTY_IDREF**	-	**dtSTRING**	250	-	2005fd
0..1	| | | | | | | | |_ **MIME_INFO**	-	-	-	-	-
1	| | | | | | | | | |_ SEQUENCE	-	-	-	-	-
1..*	| | | | | | | | | | |_ **MIME**	-	-	-	-	-
1	| | | | | | | | | | | |_ SEQUENCE	-	-	-	-	-
0..1	| | | | | | | | | | | | |_ **MIME_TYPE**	-	**dtSTRING**	100	-	2005.2
1	| | | | | | | | | | | | |_ **MIME_SOURCE**	-	**dtMLSTRING**	255	Yes	-
0..1	| | | | | | | | | | | | |_ **MIME_DESCR**	-	**dtMLSTRING**	250	Yes	-
0..1	| | | | | | | | | | | | |_ **MIME_ALT**	-	**dtMLSTRING**	80	Yes	2005fd
0..1	| | | | | | | | | | | | |_ **MIME_PURPOSE**	-	**dtSTRING**	20	-	2005fd
0..1	| | | | | | | | | | | | |_ **MIME_ORDER**	-	**dtINTEGER**	-	-	-
0..1	| | | | | | | | |_ **FORMULA_FUNCTION**	-	-	-	-	2005fd
1	| | | | | | | | | |_ SEQUENCE	-	-	-	-	-
1..*	| | | | | | | | | | |_ **TERM**	-	-	-	-	2005fd
1	| | | | | | | | | | | |_ SEQUENCE	-	-	-	-	-
1	| | | | | | | | | | | | |_ **TERM_ID**	-	**dtSTRING**	20	-	2005fd
0..1	| | | | | | | | | | | | |_ **TERM_CONDITION**	-	**dtSTRING**	3000	-	2005fd
1	| | | | | | | | | | | | |_ **TERM_EXPRESSION**	-	**dtSTRING**	3000	-	2005fd
1	| | | | | | | | |_ **PARAMETER_DEFINITIONS**	-	-	-	-	2005fd
1	| | | | | | | | | |_ SEQUENCE	-	-	-	-	-
1..*	| | | | | | | | | | |_ **PARAMETER_DEFINITION**	-	-	-	-	2005
1	| | | | | | | | | | | |_ SEQUENCE	-	-	-	-	-
1	| | | | | | | | | | | | |_ **PARAMETER_SYMBOL**	-	**dtSTRING**	60	-	2005fd
1	| | | | | | | | | | | | |_ CHOICE	-	-	-	-	-
1	| | | | | | | | | | | | | |_ **PARAMETER_BASICS**	-	-	-	-	2005fd
1	| | | | | | | | | | | | | | |_ SEQUENCE	-	-	-	-	-
1	| | | | | | | | | | | | | | | |_ **PARAMETER_NAME**	-	**dtMLSTRING**	100	Yes	2005fd
0..1	| | | | | | | | | | | | | | | |_ **PARAMETER_DESCR**	-	**dtMLSTRING**	250	Yes	2005fd
0..1	| | | | | | | | | | | | | | | |_ **PARAMETER_UNIT**	-	**dtMLSTRING**	60	Yes	2005
1	| | | | | | | | | | | | | |_ **FREF**	-	-	-	-	2005
1	| | | | | | | | | | | | | | |_ SEQUENCE	-	-	-	-	-
1	| | | | | | | | | | | | | | | |_ **REFERENCE_FEATURE_SYSTEM_NAME**	-	**dtSTRING**	80	-	-
1	| | | | | | | | | | | | | | | |_ **FT_IDREF**	-	**dtSTRING**	60	-	-
0..1	| | | | | | | | | | | | |_ **PARAMETER_ORIGIN**	-	**dtMLSTRING**	6000	Yes	2005fd
0..1	| | | | | | | | | | | | |_ **PARAMETER_DEFAULT_VALUE**	-	**dtSTRING**	250	-	2005fd
0..1	| | | | | | | | | | | | |_ **PARAMETER_MEANING**	-	**dtSTRING**	20	-	2005fd
0..1	| | | | | | | | | | | | |_ **PARAMETER_ORDER**	-	**dtINTEGER**	-	-	2005fd
1	| | | | |_ CHOICE	-	-	-	-	-
1	| | | | | |_ SEQUENCE	-	-	-	-	-
1..*	| | | | | | |_ **PRODUCT** in context T_UPDATE_PRODUCTS	-	-	-	-	2005

Copyright © 2022 BME e.V. - BMEcat® Version 2005.2
Copyright © 2010-2021 BME e.V. - BMEcat® Version 2005.1
Copyright © 2005-2009 BME e.V. - BMEcat® Version 2005
Copyright © 1998–2004 Fraunhofer IAO, Stuttgart; Universität Essen BLI - BMEcat® Version 1.2

Amount	Element name	Default value	Data type	Field length	Lang. specific	l.chg. in ver.
1	| | | | | | | |_ SEQUENCE	-	-	-	-	-
1	| | | | | | | | |_ **SUPPLIER_PID**	-	**dtSTRING**	32	-	2005
0..1	| | | | | | | | |_ **SUPPLIER_IDREF**	-	**dtSTRING**	250	-	2005fd
1	| | | | | | | | |_ **PRODUCT_DETAILS**	-	-	-	-	2005fd
1	| | | | | | | | | |_ SEQUENCE	-	-	-	-	-
1	| | | | | | | | | | |_ **DESCRIPTION_SHORT**	-	**dtMLSTRING**	150	Yes	-
0..1	| | | | | | | | | | |_ **DESCRIPTION_LONG**	-	**dtMLSTRING**	64000	Yes	1.2_fd
0..1	| | | | | | | | | | |_ CHOICE	-	-	-	-	-
0..*	| | | | | | | | | | | |_ **INTERNATIONAL_PID**	-	**dtSTRING**	100	-	2005fd
0..1	| | | | | | | | | | | |_ **EAN**	-	**dtSTRING**	14	-	-
0..1	| | | | | | | | | | |_ **SUPPLIER_ALT_PID**	-	**dtSTRING**	50	-	2005fd
0..*	| | | | | | | | | | |_ **BUYER_PID**	-	**dtSTRING**	50	-	2005fd
0..1	| | | | | | | | | | |_ **MANUFACTURER_PID**	-	**dtSTRING**	50	-	2005fd
0..1	| | | | | | | | | | |_ CHOICE	-	-	-	-	-
0..1	| | | | | | | | | | | |_ **MANUFACTURER_IDREF**	-	**dtSTRING**	250	-	2005fd
0..1	| | | | | | | | | | | |_ **MANUFACTURER_NAME**	-	**dtSTRING**	50	-	-
0..1	| | | | | | | | | | |_ **MANUFACTURER_TYPE_DESCR**	-	**dtMLSTRING**	50	Yes	1.2_fd
0..1	| | | | | | | | | | |_ **ERP_GROUP_BUYER**	-	**dtSTRING**	10	-	-
0..1	| | | | | | | | | | |_ **ERP_GROUP_SUPPLIER**	-	**dtSTRING**	10	-	-
0..1	| | | | | | | | | | |_ **DELIVERY_TIME**	-	**dtNUMBER**	-	-	1.2_fd
0..*	| | | | | | | | | | |_ **SPECIAL_TREATMENT_CLASS**	-	**dtSTRING**	20	-	-
0..1	| | | | | | | | | | |_ **KEYWORD**	-	**dtMLSTRING**	50	Yes	-
0..1	| | | | | | | | | | |_ **REMARKS**	-	**dtMLSTRING**	64000	Yes	-
0..1	| | | | | | | | | | |_ **SEGMENT**	-	**dtMLSTRING**	100	Yes	1.2_fd
0..1	| | | | | | | | | | |_ **PRODUCT_ORDER**	-	**dtINTEGER**	-	-	2005fd
0..1	| | | | | | | | | | |_ **PRODUCT_STATUS**	-	**dtMLSTRING**	250	Yes	2005fd
0..*	| | | | | | | | | | |_ **INTERNATIONAL_RESTRICTIONS**	-	**dtSTRING**	250	-	2005fd
0..1	| | | | | | | | | | |_ **ACCOUNTING_INFO**	-	-	-	-	2005fd
1	| | | | | | | | | | | |_ SEQUENCE	-	-	-	-	-
1	| | | | | | | | | | | | |_ **COST_CATEGORY_ID**	-	**dtSTRING**	64	-	2005fd
0..1	| | | | | | | | | | | | |_ **COST_TYPE**	-	**dtSTRING**	64	-	2005fd
0..1	| | | | | | | | | | | | |_ **COST_ACCOUNT**	-	**dtSTRING**	64	-	2005fd
0..*	| | | | | | | | | | |_ **AGREEMENT_REF**	-	-	-	-	2005fd
1	| | | | | | | | | | | |_ SEQUENCE	-	-	-	-	-
1	| | | | | | | | | | | | |_ **AGREEMENT_IDREF**	-	**dtSTRING**	50	-	2005fd
0..1	| | | | | | | | | | | | |_ **AGREEMENT_LINE_IDREF**	-	**dtSTRING**	50	-	2005fd
0..*	| | | | | | | | | | |_ **PRODUCT_TYPE**	-	**dtSTRING**	50	-	2005fd
0..1	| | | | | | | | | | |_ **PRODUCT_CATEGORY**	-	**dtSTRING**	20	-	2005fd
0..*	| | | | | | | | |_ **PRODUCT_FEATURES**	-	-	-	-	2005
1	| | | | | | | | | |_ SEQUENCE	-	-	-	-	-
0..1	| | | | | | | | | | |_ **REFERENCE_FEATURE_SYSTEM_NAME**	-	**dtSTRING**	80	-	-
0..1	| | | | | | | | | | |_ CHOICE	-	-	-	-	-
0..*	| | | | | | | | | | | |_ **REFERENCE_FEATURE_GROUP_ID**	-	**dtSTRING**	60	-	-
0..1	| | | | | | | | | | | |_ **REFERENCE_FEATURE_GROUP_NAME**	-	**dtMLSTRING**	60	Yes	-
0..*	| | | | | | | | | | |_ **REFERENCE_FEATURE_GROUP_ID2**	-	**dtSTRING**	60	-	2005fd

Copyright © 2022 BME e.V. - BMEcat® Version 2005.2
Copyright © 2010-2021 BME e.V. - BMEcat® Version 2005.1
Copyright © 2005-2009 BME e.V. - BMEcat® Version 2005
Copyright © 1998–2004 Fraunhofer IAO, Stuttgart; Universität Essen BLI - BMEcat® Version 1.2

Amount	Element name	Default value	Data type	Field length	Lang. specific	l.chg. in ver.
0..1	|_ **GROUP_PRODUCT_ORDER**	-	**dtINTEGER**	-	-	2005
0..*	|_ **FEATURE**	-	-	-	-	2005.2
1	|_ SEQUENCE	-	-	-	-	-
1	|_ CHOICE	-	-	-	-	-
1	|_ **FNAME**	-	**dtMLSTRING**	80	Yes	2005.2
1	|_ **FT_IDREF**	-	**dtSTRING**	60	-	-
1	|_ **FTEMPLATE**	-	-	-	-	2005
1	|_ SEQUENCE	-	-	-	-	-
1	|_ **FT_ID**	-	**dtSTRING**	60	-	-
1	|_ **FT_NAME**	-	**dtMLSTRING**	80	Yes	2005fd
0..1	|_ **FT_SHORTNAME**	-	**dtMLSTRING**	80	Yes	2005fd
0..1	|_ **FT_DESCR**	-	**dtMLSTRING**	16000	Yes	2005fd
0..1	|_ **FT_VERSION**	-	-	-	-	2005fd
1	|_ SEQUENCE	-	-	-	-	-
1	|_ **VERSION**	-	**dtSTRING**	20	-	2005fd
0..1	|_ **VERSION_DATE**	-	**dtDATETIME**	-	-	2005fd
0..1	|_ **REVISION**	-	**dtSTRING**	20	-	2005fd
0..1	|_ **REVISION_DATE**	-	**dtDATETIME**	-	-	2005fd
0..1	|_ **ORIGINAL_DATE**	-	**dtDATETIME**	-	-	2005fd
0..1	|_ CHOICE	-	-	-	-	-
0..1	|_ **FT_GROUP_IDREF**	-	**dtSTRING**	60	-	2005
0..1	|_ **FT_GROUP_NAME**	-	**dtMLSTRING**	80	Yes	2005
0..1	|_ **FT_DEPENDENCIES**	-	-	-	-	2005
1	|_ SEQUENCE	-	-	-	-	-
1..*	|_ **FT_IDREF**	-	**dtSTRING**	60	-	-
0..1	|_ **FEATURE_CONTENT**	-	-	-	-	2005
1	|_ SEQUENCE	-	-	-	-	-
1	|_ **FT_DATATYPE**	-	**dtSTRING**	20	-	-
0..1	|_ **FT_FACETS**	-	-	-	-	2005fd
1	|_ SEQUENCE	-	-	-	-	-
1..4	|_ **FT_FACET**	-	**dtSTRING**	20	-	2005fd
0..1	|_ **FT_VALUES**	-	-	-	-	2005
1	|_ SEQUENCE	-	-	-	-	-
1..*	|_ **FT_VALUE**	-	-	-	-	2005
1	|_ SEQUENCE	-	-	-	-	-
1	|_ CHOICE	-	-	-	-	-
1	|_ **VALUE_IDREF**	-	**dtSTRING**	60	-	2005fd
1	|_ **VALUE_SIMPLE**	-	**dtSTRING**	80	-	2005fd
1	|_ **VALUE_TEXT**	-	**dtMLSTRING**	80	Yes	2005fd
1	|_ **VALUE_RANGE**	-	-	-	-	2005fd
1	|_ SEQUENCE	-	-	-	-	-
1	|_ **STARTVALUE**	-	**dtNUMBER**	-	-	2005fd
1	|_ **ENDVALUE**	-	**dtNUMBER**	-	-	2005fd
0..1	|_ **INTERVALVALUE**	-	**dtNUMBER**	-	-	2005fd
0..1	|_ **MIME_INFO**	-	-	-	-	-

Copyright © 2022 BME e.V. - BMEcat® Version 2005.2
Copyright © 2010-2021 BME e.V. - BMEcat® Version 2005.1
Copyright © 2005-2009 BME e.V. - BMEcat® Version 2005
Copyright © 1998–2004 Fraunhofer IAO, Stuttgart; Universität Essen BLI - BMEcat® Version 1.2

Amount	Element name	Default value	Data type	Field length	Lang. specific	l.chg. in ver.
1	|_ SEQUENCE	-	-	-	-	-
1..*	|_ **MIME**	-	-	-	-	-
1	|_ SEQUENCE	-	-	-	-	-
0..1	|_ **MIME_TYPE**	-	**dtSTRING**	100	-	2005.2
1	|_ **MIME_SOURCE**	-	**dtMLSTRING**	255	Yes	-
0..1	|_ **MIME_DESCR**	-	**dtMLSTRING**	250	Yes	-
0..1	|_ **MIME_ALT**	-	**dtMLSTRING**	80	Yes	2005fd
0..1	|_ **MIME_PURPOSE**	-	**dtSTRING**	20	-	2005fd
0..1	|_ **MIME_ORDER**	-	**dtINTEGER**	-	-	-
0..1	|_ **CONFIG_INFO**	-	-	-	-	2005fd
1	|_ SEQUENCE	-	-	-	-	-
1	|_ **CONFIG_CODE**	-	**dtSTRING**	50	-	2005fd
0..1	|_ **PRODUCT_PRICE_DETAILS**	-	-	-	-	2005fd
1	|_ SEQUENCE	-	-	-	-	-
0..1	|_ CHOICE	-	-	-	-	-
0..1	|_ SEQUENCE	-	-	-	-	-
0..1	|_ **VALID_START_DATE**	-	**dtDATETIME**	-	-	2005fd
0..1	|_ **VALID_END_DATE**	-	**dtDATETIME**	-	-	2005fd
0..2	|_ **DATETIME** in the context of ARTICLE_PRICE_DETAILS	-	-	-	-	-
1	|_ SEQUENCE	-	-	-	-	-
1	|_ **DATE**	-	**dtDATETYPE**	-	-	-
0..1	|_ **TIME**	-	**dtTIMETYPE**	-	-	-
0..1	|_ **TIMEZONE**	-	**dtTIMEZONETYPE**	-	-	-
0..1	|_ **DAILY_PRICE**	-	**dtBOOLEAN**	-	-	-
1..*	|_ **PRODUCT_PRICE**	-	-	-	-	2005
1	|_ SEQUENCE	-	-	-	-	-
0..1	|_ CHOICE	-	-	-	-	-
0..1	|_ **PRICE_AMOUNT**	-	**dtNUMBER**	-	-	-
0..1	|_ **PRICE_FORMULA**	-	-	-	-	2005fd
1	|_ SEQUENCE	-	-	-	-	-
1	|_ **FORMULA_IDREF**	-	**dtSTRING**	60	-	2005fd
0..1	|_ **PARAMETERS**	-	-	-	-	2005fd
1	|_ SEQUENCE	-	-	-	-	-
1..*	|_ **PARAMETER**	-	-	-	-	2005fd
1	|_ SEQUENCE	-	-	-	-	-
1	|_ **PARAMETER_SYMBOLREF**	-	**dtSTRING**	60	-	2005fd
1	|_ **PARAMETER_VALUE**	-	**dtSTRING**	250	-	2005fd
0..1	|_ **PRICE_CURRENCY**	-	**dtCURRENCIES**	-	-	2005.2
0..1	|_ CHOICE	-	-	-	-	-
0..*	|_ **TAX_DETAILS**	-	-	-	-	2005
1	|_ SEQUENCE	-	-	-	-	-
0..1	|_ **CALCULATION_SEQUENCE**	1	**dtCOUNT**	-	-	2005fd
0..1	|_ **TAX_CATEGORY**	-	**dtSTRING**	80	-	2005
0..1	|_ **TAX_TYPE**	vat	**dtSTRING**	250	-	2005
0..1	|_ **TAX**	-	**dtNUMBER**	-	-	-

Copyright © 2022 BME e.V. - BMEcat® Version 2005.2
Copyright © 2010-2021 BME e.V. - BMEcat® Version 2005.1
Copyright © 2005-2009 BME e.V. - BMEcat® Version 2005
Copyright © 1998–2004 Fraunhofer IAO, Stuttgart; Universität Essen BLI - BMEcat® Version 1.2

Amount	Element name	Default value	Data type	Field length	Lang. specific	l.chg. in ver.
0..1	| | |

Amount	Element name	Default value	Data type	Field length	Lang. specific	l.chg. in ver.
1..*	| | | | | | | | | | | | | |_ CHOICE	-	-	-	-	-
1	| | | | | | | | | | | | | | |_ **FVALUE**	-	**dtMLSTRING**	-	Yes	2005.1
1..*	| | | | | | | | | | | | | | |_ **VALUE_IDREF**	-	**dtSTRING**	60	-	2005fd
1	| | | | | | | | | | | | | |_ **VARIANTS**	-	-	-	-	1.2_fd
1	| | | | | | | | | | | | | | |_ SEQUENCE	-	-	-	-	-
1..*	| | | | | | | | | | | | | | | |_ **VARIANT**	-	-	-	-	-
1	| | | | | | | | | | | | | | | | |_ SEQUENCE	-	-	-	-	-
1	| | | | | | | | | | | | | | | | | |_ CHOICE	-	-	-	-	-
1	| | | | | | | | | | | | | | | | | | |_ **FVALUE**	-	**dtMLSTRING**	-	Yes	2005.1
1..*	| | | | | | | | | | | | | | | | | | |_ **VALUE_IDREF**	-	**dtSTRING**	60	-	2005fd
1	| | | | | | | | | | | | | | | | | | |_ **SUPPLIER_AID_SUPPLEMENT**	-	**dtSTRING**	31	-	-
1	| | | | | | | | | | | | | | | | |_ **VORDER**	-	**dtINTEGER**	-	-	-
0..1	| | | | | | | | | | | | | |_ **FUNIT**	-	**dtSTRING**	20	-	-
0..1	| | | | | | | | | | | | | |_ **FORDER**	-	**dtINTEGER**	-	-	-
0..1	| | | | | | | | | | | | | |_ **FDESCR**	-	**dtMLSTRING**	250	Yes	1.2_fd
0..1	| | | | | | | | | | | | | |_ **FVALUE_DETAILS**	-	**dtMLSTRING**	250	Yes	1.2_fd
0..1	| | | | | | | | | | | | | |_ **FVALUE_TYPE**	-	**dtSTRING**	20	-	2005fd
0..1	| | | | | | | | | | | | | |_ **FID**	-	**dtSTRING**	-	-	2005.1
0..1	| | | | | | | | | | | | | |_ **FPARENT_ID**	-	**dtSTRING**	-	-	2005.1
0..*	| | | | | | | | | | | | | |_ **FEATURE**	-	-	-	-	2005.2
0..*	| | | | | | | | | | |_ **FEATURE_GROUP**	-	-	-	-	2005.1
1	| | | | | | | | | | | |_ SEQUENCE	-	-	-	-	-
0..*	| | | | | | | | | | | | |_ **FEATURE_GROUP_NAME**	-	**dtMLSTRING**	-	-	2005.1
0..*	| | | | | | | | | | | | |_ **FEATURE_GROUP_DESCRIPTION**	-	**dtMLSTRING**	-	-	2005.1
1	| | | | | | | | | | | | |_ **REFERENCE_FEATURE_GROUP_ID**	-	**dtSTRING**	60	-	-
0..*	| | | | | | | | | | | | |_ **FEATURE**	-	-	-	-	2005.2
1	| | | | | | | | | | | | | |_ SEQUENCE	-	-	-	-	-
1	| | | | | | | | | | | | | | |_ CHOICE	-	-	-	-	-
1	| | | | | | | | | | | | | | | |_ **FNAME**	-	**dtMLSTRING**	80	Yes	2005.2
1	| | | | | | | | | | | | | | | |_ **FT_IDREF**	-	**dtSTRING**	60	-	-
1	| | | | | | | | | | | | | | | |_ **FTEMPLATE**	-	-	-	-	2005
1	| | | | | | | | | | | | | | | | |_ SEQUENCE	-	-	-	-	-
1	| | | | | | | | | | | | | | | | | |_ **FT_ID**	-	**dtSTRING**	60	-	-
1	| | | | | | | | | | | | | | | | | |_ **FT_NAME**	-	**dtMLSTRING**	80	Yes	2005fd
0..1	| | | | | | | | | | | | | | | | | |_ **FT_SHORTNAME**	-	**dtMLSTRING**	80	Yes	2005fd
0..1	| | | | | | | | | | | | | | | | | |_ **FT_DESCR**	-	**dtMLSTRING**	16000	Yes	2005fd
0..1	| | | | | | | | | | | | | | | | | |_ **FT_VERSION**	-	-	-	-	2005fd
1	| | | | | | | | | | | | | | | | | | |_ SEQUENCE	-	-	-	-	-
1	| | | | | | | | | | | | | | | | | | | |_ **VERSION**	-	**dtSTRING**	20	-	2005fd
0..1	| | | | | | | | | | | | | | | | | | | |_ **VERSION_DATE**	-	**dtDATETIME**	-	-	2005fd
0..1	| | | | | | | | | | | | | | | | | | | |_ **REVISION**	-	**dtSTRING**	20	-	2005fd
0..1	| | | | | | | | | | | | | | | | | | | |_ **REVISION_DATE**	-	**dtDATETIME**	-	-	2005fd
0..1	| | | | | | | | | | | | | | | | | | | |_ **ORIGINAL_DATE**	-	**dtDATETIME**	-	-	2005fd
0..1	| | | | | | | | | | | | | | | | | |_ CHOICE	-	-	-	-	-
0..1	| | | | | | | | | | | | | | | | | | |_ **FT_GROUP_IDREF**	-	**dtSTRING**	60	-	2005

Copyright © 2022 BME e.V. - BMEcat® Version 2005.2
Copyright © 2010-2021 BME e.V. - BMEcat® Version 2005.1
Copyright © 2005-2009 BME e.V. - BMEcat® Version 2005
Copyright © 1998–2004 Fraunhofer IAO, Stuttgart; Universität Essen BLI - BMEcat® Version 1.2

Amount	Element name	Default value	Data type	Field length	Lang. specific	l.chg. in ver.
0..1	|_ **FT_GROUP_NAME**	-	**dtMLSTRING**	80	Yes	2005
0..1	|_ **FT_DEPENDENCIES**	-	-	-	-	2005
1	|_ SEQUENCE	-	-	-	-	-
1..*	|_ **FT_IDREF**	-	**dtSTRING**	60	-	-
0..1	|_ **FEATURE_CONTENT**	-	-	-	-	2005
1	|_ SEQUENCE	-	-	-	-	-
1	|_ **FT_DATATYPE**	-	**dtSTRING**	20	-	-
0..1	|_ **FT_FACETS**	-	-	-	-	2005fd
1	|_ SEQUENCE	-	-	-	-	-
1..4	|_ **FT_FACET**	-	**dtSTRING**	20	-	2005fd
0..1	|_ **FT_VALUES**	-	-	-	-	2005
1	|_ SEQUENCE	-	-	-	-	-
1..*	|_ **FT_VALUE**	-	-	-	-	2005
1	|_ SEQUENCE	-	-	-	-	-
1	|_ CHOICE	-	-	-	-	-
1	|_ **VALUE_IDREF**	-	**dtSTRING**	60	-	2005fd
1	|_ **VALUE_SIMPLE**	-	**dtSTRING**	80	-	2005fd
1	|_ **VALUE_TEXT**	-	**dtMLSTRING**	80	Yes	2005fd
1	|_ **VALUE_RANGE**	-	-	-	-	2005fd
1	|_ SEQUENCE	-	-	-	-	-
1	|_ **STARTVALUE**	-	**dtNUMBER**	-	-	2005fd
1	|_ **ENDVALUE**	-	**dtNUMBER**	-	-	2005fd
0..1	|_ **INTERVALVALUE**	-	**dtNUMBER**	-	-	2005fd
0..1	|_ **MIME_INFO**	-	-	-	-	-
1	|_ SEQUENCE	-	-	-	-	-
1..*	|_ **MIME**	-	-	-	-	-
1	|_ SEQUENCE	-	-	-	-	-
0..1	|_ **MIME_TYPE**	-	**dtSTRING**	100	-	2005.2
1	|_ **MIME_SOURCE**	-	**dtMLSTRING**	255	Yes	-
0..1	|_ **MIME_DESCR**	-	**dtMLSTRING**	250	Yes	-
0..1	|_ **MIME_ALT**	-	**dtMLSTRING**	80	Yes	2005fd
0..1	|_ **MIME_PURPOSE**	-	**dtSTRING**	20	-	2005fd
0..1	|_ **MIME_ORDER**	-	**dtINTEGER**	-	-	-
0..1	|_ **CONFIG_INFO**	-	-	-	-	2005fd
1	|_ SEQUENCE	-	-	-	-	-
1	|_ **CONFIG_CODE**	-	**dtSTRING**	50	-	2005fd
0..1	|_ **PRODUCT_PRICE_DETAILS**	-	-	-	-	2005fd
1	|_ SEQUENCE	-	-	-	-	-
0..1	|_ CHOICE	-	-	-	-	-
0..1	|_ SEQUENCE	-	-	-	-	-
0..1	|_ **VALID_START_DATE**	-	**dtDATETIME**	-	-	2005fd
0..1	|_ **VALID_END_DATE**	-	**dtDATETIME**	-	-	2005fd
0..2	|_ **DATETIME** in the context of ARTICLE_PRICE_DETAILS	-	-	-	-	-
1	|_ SEQUENCE	-	-	-	-	-
1	|_ **DATE**	-	**dtDATETYPE**	-	-	-

Copyright © 2022 BME e.V. - BMEcat® Version 2005.2
Copyright © 2010-2021 BME e.V. - BMEcat® Version 2005.1
Copyright © 2005-2009 BME e.V. - BMEcat® Version 2005
Copyright © 1998–2004 Fraunhofer IAO, Stuttgart; Universität Essen BLI - BMEcat® Version 1.2

Amount	Element name	Default value	Data type	Field length	Lang. specific	l.chg. in ver.
0..1	|_ **TIME**	-	**dtTIMETYPE**	-	-	-
0..1	|_ **TIMEZONE**	-	**dtTIMEZONETYPE**	-	-	-
0..1	|_ **DAILY_PRICE**	-	**dtBOOLEAN**	-	-	-
1..*	|_ **PRODUCT_PRICE**	-	-	-	-	2005
1	|_ SEQUENCE	-	-	-	-	-
0..1	|_ CHOICE	-	-	-	-	-
0..1	|_ **PRICE_AMOUNT**	-	**dtNUMBER**	-	-	-
0..1	|_ **PRICE_FORMULA**	-	-	-	-	2005fd
1	|_ SEQUENCE	-	-	-	-	-
1	|_ **FORMULA_IDREF**	-	**dtSTRING**	60	-	2005fd
0..1	|_ **PARAMETERS**	-	-	-	-	2005fd
1	|_ SEQUENCE	-	-	-	-	-
1..*	|_ **PARAMETER**	-	-	-	-	2005fd
1	|_ SEQUENCE	-	-	-	-	-
1	|_ **PARAMETER_SYMBOLREF**	-	**dtSTRING**	60	-	2005fd
1	|_ **PARAMETER_VALUE**	-	**dtSTRING**	250	-	2005fd
0..1	|_ **PRICE_CURRENCY**	-	**dtCURRENCIES**	-	-	2005.2
0..1	|_ CHOICE	-	-	-	-	-
0..*	|_ **TAX_DETAILS**	-	-	-	-	2005
1	|_ SEQUENCE	-	-	-	-	-
0..1	|_ **CALCULATION_SEQUENCE**	1	**dtCOUNT**	-	-	2005fd
0..1	|_ **TAX_CATEGORY**	-	**dtSTRING**	80	-	2005
0..1	|_ **TAX_TYPE**	vat	**dtSTRING**	250	-	2005
0..1	|_ **TAX**	-	**dtNUMBER**	-	-	-
0..1	|_ **EXEMPTION_REASON**	-	**dtMLSTRING**	250	Yes	2005
0..1	|_ **JURISDICTION**	-	**dtMLSTRING**	250	Yes	2005
0..1	|_ **TAX**	-	**dtNUMBER**	-	-	-
0..1	|_ **PRICE_FACTOR**	1	**dtNUMBER**	-	-	2005
0..1	|_ **LOWER_BOUND**	-	**dtNUMBER**	-	-	-
0..1	|_ CHOICE	-	-	-	-	-
0..*	|_ **TERRITORY**	-	**dtCOUNTRIES**	-	-	1.2_fd
0..1	|_ **AREA_REFS**	-	-	-	-	2005fd
1	|_ SEQUENCE	-	-	-	-	-
1..*	|_ **AREA_IDREF**	-	**dtSTRING**	60	-	2005fd
0..1	|_ **PRICE_BASE**	-	-	-	-	2005fd
1	|_ SEQUENCE	-	-	-	-	-
1	|_ **PRICE_UNIT**	-	**dtPUNIT**	-	-	1.2_fd
0..1	|_ **PRICE_UNIT_FACTOR**	1	**dtFLOAT**	-	-	2005
0..*	|_ **PRICE_FLAG**	-	**dtBOOLEAN**	-	-	-
0..1	|_ **VALUE_ORDER**	-	**dtINTEGER**	-	-	2005fd
0..1	|_ **DEFAULT_FLAG**	-	**dtBOOLEAN**	-	-	2005fd
0..1	|_ **FT_VALENCY**	univalent	**dtSTRING**	20	-	2005fd
0..1	|_ CHOICE	-	-	-	-	-
0..1	|_ **FT_UNIT_IDREF**	-	**dtSTRING**	60	-	2005fd
0..1	|_ **FT_UNIT**	-	**dtSTRING**	80	-	2005fd

Copyright © 2022 BME e.V. - BMEcat® Version 2005.2
Copyright © 2010-2021 BME e.V. - BMEcat® Version 2005.1
Copyright © 2005-2009 BME e.V. - BMEcat® Version 2005
Copyright © 1998–2004 Fraunhofer IAO, Stuttgart; Universität Essen BLI - BMEcat® Version 1.2

Amount	Element name	Default value	Data type	Field length	Lang. specific	l.chg. in ver.
0..1	|_ **FT_MANDATORY**	-	**dtBOOLEAN**	-	-	-
0..1	|_ **FT_ORDER**	-	**dtINTEGER**	-	-	-
0..1	|_ **FT_SYMBOL**	-	**dtMLSTRING**	20	Yes	1.2
0..1	|_ **FT_SYNONYMS**	-	-	-	-	2005fd
1	|_ SEQUENCE	-	-	-	-	-
1	|_ **SYNONYM**	-	**dtMLSTRING**	80	Yes	2005fd
0..1	|_ **MIME_INFO**	-	-	-	-	-
1	|_ SEQUENCE	-	-	-	-	-
1..*	|_ **MIME**	-	-	-	-	-
1	|_ SEQUENCE	-	-	-	-	-
0..1	|_ **MIME_TYPE**	-	**dtSTRING**	100	-	2005.2
1	|_ **MIME_SOURCE**	-	**dtMLSTRING**	255	Yes	-
0..1	|_ **MIME_DESCR**	-	**dtMLSTRING**	250	Yes	-
0..1	|_ **MIME_ALT**	-	**dtMLSTRING**	80	Yes	2005fd
0..1	|_ **MIME_PURPOSE**	-	**dtSTRING**	20	-	2005fd
0..1	|_ **MIME_ORDER**	-	**dtINTEGER**	-	-	-
0..1	|_ **FT_SOURCE**	-	-	-	-	2005
1	|_ SEQUENCE	-	-	-	-	-
0..1	|_ **SOURCE_NAME**	-	**dtMLSTRING**	80	Yes	2005
0..1	|_ **SOURCE_URI**	-	**dtSTRING**	255	-	2005fd
0..1	|_ **PARTY_IDREF**	-	**dtSTRING**	250	-	2005fd
0..1	|_ **FT_NOTE**	-	**dtMLSTRING**	16000	Yes	2005fd
0..1	|_ **FT_REMARK**	-	**dtMLSTRING**	16000	Yes	2005fd
1	|_ CHOICE	-	-	-	-	-
1..*	|_ CHOICE	-	-	-	-	-
1	|_ **FVALUE**	-	**dtMLSTRING**	-	Yes	2005.1
1..*	|_ **VALUE_IDREF**	-	**dtSTRING**	60	-	2005fd
1	|_ **VARIANTS**	-	-	-	-	1.2_fd
1	|_ SEQUENCE	-	-	-	-	-
1..*	|_ **VARIANT**	-	-	-	-	-
1	|_ SEQUENCE	-	-	-	-	-
1	|_ CHOICE	-	-	-	-	-
1	|_ **FVALUE**	-	**dtMLSTRING**	-	Yes	2005.1
1..*	|_ **VALUE_IDREF**	-	**dtSTRING**	60	-	2005fd
1	|_ **SUPPLIER_AID_SUPPLEMENT**	-	**dtSTRING**	31	-	-
1	|_ **VORDER**	-	**dtINTEGER**	-	-	-
0..1	|_ **FUNIT**	-	**dtSTRING**	20	-	-
0..1	|_ **FORDER**	-	**dtINTEGER**	-	-	-
0..1	|_ **FDESCR**	-	**dtMLSTRING**	250	Yes	1.2_fd
0..1	|_ **FVALUE_DETAILS**	-	**dtMLSTRING**	250	Yes	1.2_fd
0..1	|_ **FVALUE_TYPE**	-	**dtSTRING**	20	-	2005fd
0..1	|_ **FID**	-	**dtSTRING**	-	-	2005.1
0..1	|_ **FPARENT_ID**	-	**dtSTRING**	-	-	2005.1
0..*	|_ **FEATURE**	-	-	-	-	2005.2
1	|_ **PRODUCT_ORDER_DETAILS**	-	-	-	-	2005fd

Copyright © 2022 BME e.V. - BMEcat® Version 2005.2
Copyright © 2010-2021 BME e.V. - BMEcat® Version 2005.1
Copyright © 2005-2009 BME e.V. - BMEcat® Version 2005
Copyright © 1998–2004 Fraunhofer IAO, Stuttgart; Universität Essen BLI - BMEcat® Version 1.2

Amount	Element name	Default value	Data type	Field length	Lang. specific	l.chg. in ver.
1	|_ SEQUENCE	-	-	-	-	-
1	|_ **ORDER_UNIT**	-	**dtPUNIT**	-	-	1.2_fd
0..1	|_ SEQUENCE	-	-	-	-	-
1	|_ **CONTENT_UNIT**	-	**dtPUNIT**	-	-	1.2_fd
0..1	|_ **NO_CU_PER_OU**	1	**dtNUMBER**	-	-	2005
0..1	|_ **SUPPLIER_PIDREF**	-	**dtSTRING**	32	-	2005fd
0..1	|_ **SUPPLIER_IDREF**	-	**dtSTRING**	250	-	2005fd
0..1	|_ **PRICE_QUANTITY**	1	**dtNUMBER**	-	-	2005
0..1	|_ **QUANTITY_MIN**	1	**dtFLOAT**	-	-	2005
0..1	|_ **QUANTITY_INTERVAL**	1	**dtFLOAT**	-	-	2005
0..1	|_ **QUANTITY_MAX**	-	**dtFLOAT**	-	-	2005fd
0..1	|_ **PACKING_UNITS**	-	-	-	-	2005fd
1	|_ SEQUENCE	-	-	-	-	-
1..*	|_ **PACKING_UNIT**	-	-	-	-	2005
1	|_ SEQUENCE	-	-	-	-	-
1	|_ **QUANTITY_MIN**	1	**dtFLOAT**	-	-	2005
1	|_ **QUANTITY_MAX**	-	**dtFLOAT**	-	-	2005fd
1	|_ **PACKING_UNIT_CODE**	-	**dtPUNIT**	-	-	1.2_fd
0..1	|_ **PACKING_UNIT_DESCR**	-	**dtMLSTRING**	250	Yes	2005fd
0..1	|_ CHOICE	-	-	-	-	-
1	|_ **SUPPLIER_PID**	-	**dtSTRING**	32	-	2005
0..1	|_ SEQUENCE	-	-	-	-	-
1	|_ **SUPPLIER_PIDREF**	-	**dtSTRING**	32	-	2005fd
0..1	|_ **SUPPLIER_IDREF**	-	**dtSTRING**	250	-	2005fd
1..*	|_ **PRODUCT_PRICE_DETAILS**	-	-	-	-	2005fd
1	|_ SEQUENCE	-	-	-	-	-
0..1	|_ CHOICE	-	-	-	-	-
0..1	|_ SEQUENCE	-	-	-	-	-
0..1	|_ **VALID_START_DATE**	-	**dtDATETIME**	-	-	2005fd
0..1	|_ **VALID_END_DATE**	-	**dtDATETIME**	-	-	2005fd
0..2	|_ **DATETIME** in the context of ARTICLE_PRICE_DETAILS	-	-	-	-	-
1	|_ SEQUENCE	-	-	-	-	-
1	|_ **DATE**	-	**dtDATETYPE**	-	-	-
0..1	|_ **TIME**	-	**dtTIMETYPE**	-	-	-
0..1	|_ **TIMEZONE**	-	**dtTIMEZONETYPE**	-	-	-
0..1	|_ **DAILY_PRICE**	-	**dtBOOLEAN**	-	-	-
1..*	|_ **PRODUCT_PRICE**	-	-	-	-	2005
1	|_ SEQUENCE	-	-	-	-	-
0..1	|_ CHOICE	-	-	-	-	-
0..1	|_ **PRICE_AMOUNT**	-	**dtNUMBER**	-	-	-
0..1	|_ **PRICE_FORMULA**	-	-	-	-	2005fd
1	|_ SEQUENCE	-	-	-	-	-
1	|_ **FORMULA_IDREF**	-	**dtSTRING**	60	-	2005fd
0..1	|_ **PARAMETERS**	-	-	-	-	2005fd
1	|_ SEQUENCE	-	-	-	-	-

Copyright © 2022 BME e.V. - BMEcat® Version 2005.2
Copyright © 2010-2021 BME e.V. - BMEcat® Version 2005.1
Copyright © 2005-2009 BME e.V. - BMEcat® Version 2005
Copyright © 1998–2004 Fraunhofer IAO, Stuttgart; Universität Essen BLI - BMEcat® Version 1.2

Amount	Element name	Default value	Data type	Field length	Lang. specific	l.chg. in ver.
1..*	| | | | | | | | | | | | | | | | |_ **PARAMETER**	-	-	-	-	2005fd
1	| | | | | | | | | | | | | | | | | |_ SEQUENCE	-	-	-	-	-
1	| | | | | | | | | | | | | | | | | | |_ **PARAMETER_SYMBOLREF**	-	**dtSTRING**	60	-	2005fd
1	| | | | | | | | | | | | | | | | | | |_ **PARAMETER_VALUE**	-	**dtSTRING**	250	-	2005fd
0..1	| | | | | | | | | | | |_ **PRICE_CURRENCY**	-	**dtCURRENCIES**	-	-	2005.2
0..1	| | | | | | | | | | | |_ CHOICE	-	-	-	-	-
0..*	| | | | | | | | | | | | |_ **TAX_DETAILS**	-	-	-	-	2005
1	| | | | | | | | | | | | | |_ SEQUENCE	-	-	-	-	-
0..1	| | | | | | | | | | | | | | |_ **CALCULATION_SEQUENCE**	1	**dtCOUNT**	-	-	2005fd
0..1	| | | | | | | | | | | | | | |_ **TAX_CATEGORY**	-	**dtSTRING**	80	-	2005
0..1	| | | | | | | | | | | | | | |_ **TAX_TYPE**	vat	**dtSTRING**	250	-	2005
0..1	| | | | | | | | | | | | | | |_ **TAX**	-	**dtNUMBER**	-	-	-
0..1	| | | | | | | | | | | | | | |_ **EXEMPTION_REASON**	-	**dtMLSTRING**	250	Yes	2005
0..1	| | | | | | | | | | | | | | |_ **JURISDICTION**	-	**dtMLSTRING**	250	Yes	2005
0..1	| | | | | | | | | | | | |_ **TAX**	-	**dtNUMBER**	-	-	-
0..1	| | | | | | | | | | | | |_ **PRICE_FACTOR**	1	**dtNUMBER**	-	-	2005
0..1	| | | | | | | | | | | | |_ **LOWER_BOUND**	-	**dtNUMBER**	-	-	-
0..1	| | | | | | | | | | | | |_ CHOICE	-	-	-	-	-
0..*	| | | | | | | | | | | | | |_ **TERRITORY**	-	**dtCOUNTRIES**	-	-	1.2_fd
0..1	| | | | | | | | | | | | | |_ **AREA_REFS**	-	-	-	-	2005fd
1	| | | | | | | | | | | | | | |_ SEQUENCE	-	-	-	-	-
1..*	| | | | | | | | | | | | | | | |_ **AREA_IDREF**	-	**dtSTRING**	60	-	2005fd
0..1	| | | | | | | | | | | | |_ **PRICE_BASE**	-	-	-	-	2005fd
1	| | | | | | | | | | | | | |_ SEQUENCE	-	-	-	-	-
1	| | | | | | | | | | | | | | |_ **PRICE_UNIT**	-	**dtPUNIT**	-	-	1.2_fd
0..1	| | | | | | | | | | | | | | |_ **PRICE_UNIT_FACTOR**	1	**dtFLOAT**	-	-	2005
0..*	| | | | | | | | | | | | |_ **PRICE_FLAG**	-	**dtBOOLEAN**	-	-	-
0..1	| | | | | | | |_ **MIME_INFO**	-	-	-	-	-
1	| | | | | | | | |_ SEQUENCE	-	-	-	-	-
1..*	| | | | | | | | | |_ **MIME**	-	-	-	-	-
1	| | | | | | | | | | |_ SEQUENCE	-	-	-	-	-
0..1	| | | | | | | | | | | |_ **MIME_TYPE**	-	**dtSTRING**	100	-	2005.2
1	| | | | | | | | | | | |_ **MIME_SOURCE**	-	**dtMLSTRING**	255	Yes	-
0..1	| | | | | | | | | | | |_ **MIME_DESCR**	-	**dtMLSTRING**	250	Yes	-
0..1	| | | | | | | | | | | |_ **MIME_ALT**	-	**dtMLSTRING**	80	Yes	2005fd
0..1	| | | | | | | | | | | |_ **MIME_PURPOSE**	-	**dtSTRING**	20	-	2005fd
0..1	| | | | | | | | | | | |_ **MIME_ORDER**	-	**dtINTEGER**	-	-	-
0..1	| | | | | | | |_ **USER_DEFINED_EXTENSIONS**	-	**udxPRODUCT**	-	-	-
0..*	| | | | | | | |_ **PRODUCT_REFERENCE**	-	-	-	-	2005
1	| | | | | | | | |_ SEQUENCE	-	-	-	-	-
1	| | | | | | | | | |_ **PROD_ID_TO**	-	**dtSTRING**	80	-	2005fd
0..1	| | | | | | | | | |_ **SUPPLIER_IDREF**	-	**dtSTRING**	250	-	2005fd
0..1	| | | | | | | | | |_ **CATALOG_ID**	-	**dtSTRING**	20	-	-
0..1	| | | | | | | | | |_ **CATALOG_VERSION**	-	**dtSTRING**	7	-	1.2_fd
0..1	| | | | | | | | | |_ **REFERENCE_DESCR**	-	**dtMLSTRING**	250	Yes	2005fd

Copyright © 2022 BME e.V. - BMEcat® Version 2005.2
Copyright © 2010-2021 BME e.V. - BMEcat® Version 2005.1
Copyright © 2005-2009 BME e.V. - BMEcat® Version 2005
Copyright © 1998–2004 Fraunhofer IAO, Stuttgart; Universität Essen BLI - BMEcat® Version 1.2

Amount	Element name	Default value	Data type	Field length	Lang. specific	l.chg. in ver.
0..1	|_ **MIME_INFO**	-	-	-	-	-
1	|_ SEQUENCE	-	-	-	-	-
1..*	|_ **MIME**	-	-	-	-	-
1	|_ SEQUENCE	-	-	-	-	-
0..1	|_ **MIME_TYPE**	-	**dtSTRING**	100	-	2005.2
1	|_ **MIME_SOURCE**	-	**dtMLSTRING**	255	Yes	-
0..1	|_ **MIME_DESCR**	-	**dtMLSTRING**	250	Yes	-
0..1	|_ **MIME_ALT**	-	**dtMLSTRING**	80	Yes	2005fd
0..1	|_ **MIME_PURPOSE**	-	**dtSTRING**	20	-	2005fd
0..1	|_ **MIME_ORDER**	-	**dtINTEGER**	-	-	-
0..1	|_ **PRODUCT_CONTACTS**	-	-	-	-	2005
1	|_ SEQUENCE	-	-	-	-	-
1	|_ **PARTY_IDREF**	-	**dtSTRING**	250	-	2005fd
1..*	|_ **CONTACT_IDREF**	-	**dtSTRING**	60	-	2005
0..1	|_ **PRODUCT_IPP_DETAILS**	-	-	-	-	2005fd
1	|_ SEQUENCE	-	-	-	-	-
1..*	|_ **IPP**	-	-	-	-	2005fd
1	|_ SEQUENCE	-	-	-	-	-
1	|_ **IPP_IDREF**	-	**dtSTRING**	60	-	2005fd
1..*	|_ **IPP_OPERATION_IDREF**	-	**dtSTRING**	60	-	2005fd
0..1	|_ **IPP_RESPONSE_TIME**	-	**dtDURATION**	-	-	2005fd
0..1	|_ **IPP_URI**	-	**dtMLSTRING**	255	Yes	2005fd
0..*	|_ **IPP_PARAM**	-	-	-	-	2005fd
1	|_ SEQUENCE	-	-	-	-	-
1	|_ **IPP_PARAM_NAMEREF**	-	**dtSTRING**	100	-	2005fd
1	|_ **IPP_PARAM_VALUE**	-	**dtSTRING**	3000	-	2005fd
0..1	|_ **PRODUCT_LOGISTIC_DETAILS**	-	-	-	-	2005
1	|_ SEQUENCE	-	-	-	-	-
0..*	|_ **CUSTOMS_TARIFF_NUMBER**	-	-	-	-	2005fd
1	|_ SEQUENCE	-	-	-	-	-
1	|_ **CUSTOMS_NUMBER**	-	**dtSTRING**	60	-	2005fd
0..1	|_ CHOICE	-	-	-	-	-
0..*	|_ **TERRITORY**	-	**dtCOUNTRIES**	-	-	1.2_fd
0..1	|_ **AREA_REFS**	-	-	-	-	2005fd
1	|_ SEQUENCE	-	-	-	-	-
1..*	|_ **AREA_IDREF**	-	**dtSTRING**	60	-	2005fd
0..1	|_ **STATISTICS_FACTOR**	-	**dtNUMBER**	-	-	2005
0..*	|_ **COUNTRY_OF_ORIGIN**	-	**dtCOUNTRIES**	-	-	2005fd
0..1	|_ **PRODUCT_DIMENSIONS**	-	-	-	-	2005fd
1	|_ SEQUENCE	-	-	-	-	-
0..1	|_ **VOLUME**	-	**dtNUMBER**	-	-	2005fd
0..1	|_ **WEIGHT**	-	**dtNUMBER**	-	-	2005fd
0..1	|_ **LENGTH**	-	**dtNUMBER**	-	-	2005fd
0..1	|_ **WIDTH**	-	**dtNUMBER**	-	-	2005fd
0..1	|_ **DEPTH**	-	**dtNUMBER**	-	-	2005fd

Copyright © 2022 BME e.V. - BMEcat® Version 2005.2
Copyright © 2010-2021 BME e.V. - BMEcat® Version 2005.1
Copyright © 2005-2009 BME e.V. - BMEcat® Version 2005
Copyright © 1998–2004 Fraunhofer IAO, Stuttgart; Universität Essen BLI - BMEcat® Version 1.2

Amount	Element name	Default value	Data type	Field length	Lang. specific	l.chg. in ver.
0..*	|_ **DELIVERY_TIMES**	-	-	-	-	2005fd
1	|_ SEQUENCE	-	-	-	-	-
0..1	|_ CHOICE	-	-	-	-	-
0..*	|_ **TERRITORY**	-	**dtCOUNTRIES**	-	-	1.2_fd
0..1	|_ **AREA_REFS**	-	-	-	-	2005fd
1	|_ SEQUENCE	-	-	-	-	-
1..*	|_ **AREA_IDREF**	-	**dtSTRING**	60	-	2005fd
1..*	|_ **TIME_SPAN**	-	-	-	-	2005
1	|_ SEQUENCE	-	-	-	-	-
1	|_ **TIME_BASE**	-	**dtSTRING**	20	-	2005
0..1	|_ **TIME_VALUE_DURATION**	-	**dtSTRING**	20	-	2005
0..1	|_ **TIME_VALUE_INTERVAL**	1	**dtSTRING**	20	-	2005
0..1	|_ **TIME_VALUE_START**	-	**dtSTRING**	50	-	2005fd
0..1	|_ **TIME_VALUE_END**	-	**dtSTRING**	50	-	2005fd
0..*	|_ **SUB_TIME_SPANS**	-	-	-	-	2005
1	|_ SEQUENCE	-	-	-	-	-
1	|_ **TIME_BASE**	-	**dtSTRING**	20	-	2005
0..1	|_ **TIME_VALUE_DURATION**	-	**dtSTRING**	20	-	2005
0..1	|_ **TIME_VALUE_INTERVAL**	1	**dtSTRING**	20	-	2005
0..1	|_ **TIME_VALUE_START**	-	**dtSTRING**	50	-	2005fd
0..1	|_ **TIME_VALUE_END**	-	**dtSTRING**	50	-	2005fd
0..*	|_ **SUB_TIME_SPANS**	-	-	-	-	2005
0..1	|_ **LEADTIME**	-	**dtFLOAT**	-	-	2005fd
0..*	|_ **TRANSPORT**	-	-	-	-	2005fd
1	|_ SEQUENCE	-	-	-	-	-
1	|_ **INCOTERM**	-	**dtSTRING**	3	-	2005fd
0..1	|_ **LOCATION**	-	**dtSTRING**	250	-	2005fd
0..1	|_ **TRANSPORT_REMARK**	-	**dtMLSTRING**	64000	Yes	2005fd
0..*	|_ **MEANS_OF_TRANSPORT**	-	-	-	-	2005fd
1	|_ SEQUENCE	-	-	-	-	-
1	|_ **MEANS_OF_TRANSPORT_ID**	-	**dtSTRING**	50	-	2005fd
0..1	|_ **MEANS_OF_TRANSPORT_NAME**	-	**dtMLSTRING**	50	Yes	2005fd
0..1	|_ **PRODUCT_CONFIG_DETAILS**	-	-	-	-	2005fd
1	|_ SEQUENCE	-	-	-	-	-
1..*	|_ **CONFIG_STEP**	-	-	-	-	2005fd
1	|_ SEQUENCE	-	-	-	-	-
1	|_ **STEP_ID**	-	**dtSTRING**	60	-	2005fd
1	|_ **STEP_HEADER**	-	**dtMLSTRING**	250	Yes	2005fd
0..1	|_ **STEP_DESCR_SHORT**	-	**dtMLSTRING**	3000	Yes	2005fd
0..1	|_ **STEP_DESCR_LONG**	-	**dtMLSTRING**	64000	Yes	2005fd
0..1	|_ **STEP_ORDER**	-	**dtINTEGER**	-	-	2005fd
0..1	|_ **STEP_INTERACTION_TYPE**	force_ userinput	**dtSTRING**	20	-	2005fd
0..1	|_ **CONFIG_CODE**	-	**dtSTRING**	50	-	2005fd
0..1	|_ **PRODUCT_PRICE_DETAILS**	-	-	-	-	2005fd

Copyright © 2022 BME e.V. - BMEcat® Version 2005.2
Copyright © 2010-2021 BME e.V. - BMEcat® Version 2005.1
Copyright © 2005-2009 BME e.V. - BMEcat® Version 2005
Copyright © 1998–2004 Fraunhofer IAO, Stuttgart; Universität Essen BLI - BMEcat® Version 1.2

Amount	Element name	Default value	Data type	Field length	Lang. specific	l.chg. in ver.
1	|_ SEQUENCE	-	-	-	-	-
0..1	|_ CHOICE	-	-	-	-	-
0..1	|_ SEQUENCE	-	-	-	-	-
0..1	|_ **VALID_START_DATE**	-	**dtDATETIME**	-	-	2005fd
0..1	|_ **VALID_END_DATE**	-	**dtDATETIME**	-	-	2005fd
0..2	|_ **DATETIME** in the context of ARTICLE_PRICE_DETAILS	-	-	-	-	-
1	|_ SEQUENCE	-	-	-	-	-
1	|_ **DATE**	-	**dtDATETYPE**	-	-	-
0..1	|_ **TIME**	-	**dtTIMETYPE**	-	-	-
0..1	|_ **TIMEZONE**	-	**dtTIMEZONETYPE**	-	-	-
0..1	|_ **DAILY_PRICE**	-	**dtBOOLEAN**	-	-	-
1..*	|_ **PRODUCT_PRICE**	-	-	-	-	2005
1	|_ SEQUENCE	-	-	-	-	-
0..1	|_ CHOICE	-	-	-	-	-
0..1	|_ **PRICE_AMOUNT**	-	**dtNUMBER**	-	-	-
0..1	|_ **PRICE_FORMULA**	-	-	-	-	2005fd
1	|_ SEQUENCE	-	-	-	-	-
1	|_ **FORMULA_IDREF**	-	**dtSTRING**	60	-	2005fd
0..1	|_ **PARAMETERS**	-	-	-	-	2005fd
1	|_ SEQUENCE	-	-	-	-	-
1..*	|_ **PARAMETER**	-	-	-	-	2005fd
1	|_ SEQUENCE	-	-	-	-	-
1	|_ **PARAMETER_SYMBOLREF**	-	**dtSTRING**	60	-	2005fd
1	|_ **PARAMETER_VALUE**	-	**dtSTRING**	250	-	2005fd
0..1	|_ **PRICE_CURRENCY**	-	**dtCURRENCIES**	-	-	2005.2
0..1	|_ CHOICE	-	-	-	-	-
0..*	|_ **TAX_DETAILS**	-	-	-	-	2005
1	|_ SEQUENCE	-	-	-	-	-
0..1	|_ **CALCULATION_SEQUENCE**	1	**dtCOUNT**	-	-	2005fd
0..1	|_ **TAX_CATEGORY**	-	**dtSTRING**	80	-	2005
0..1	|_ **TAX_TYPE**	vat	**dtSTRING**	250	-	2005
0..1	|_ **TAX**	-	**dtNUMBER**	-	-	-
0..1	|_ **EXEMPTION_REASON**	-	**dtMLSTRING**	250	Yes	2005
0..1	|_ **JURISDICTION**	-	**dtMLSTRING**	250	Yes	2005
0..1	|_ **TAX**	-	**dtNUMBER**	-	-	-
0..1	|_ **PRICE_FACTOR**	1	**dtNUMBER**	-	-	2005
0..1	|_ **LOWER_BOUND**	-	**dtNUMBER**	-	-	-
0..1	|_ CHOICE	-	-	-	-	-
0..*	|_ **TERRITORY**	-	**dtCOUNTRIES**	-	-	1.2_fd
0..1	|_ **AREA_REFS**	-	-	-	-	2005fd
1	|_ SEQUENCE	-	-	-	-	-
1..*	|_ **AREA_IDREF**	-	**dtSTRING**	60	-	2005fd
0..1	|_ **PRICE_BASE**	-	-	-	-	2005fd
1	|_ SEQUENCE	-	-	-	-	-
1	|_ **PRICE_UNIT**	-	**dtPUNIT**	-	-	1.2_fd

Copyright © 2022 BME e.V. - BMEcat® Version 2005.2
Copyright © 2010-2021 BME e.V. - BMEcat® Version 2005.1
Copyright © 2005-2009 BME e.V. - BMEcat® Version 2005
Copyright © 1998–2004 Fraunhofer IAO, Stuttgart; Universität Essen BLI - BMEcat® Version 1.2

Amount	Element name	Default value	Data type	Field length	Lang. specific	l.chg. in ver.
0..1	| | | | | | | | | | | | | | | | | | |_ **PRICE_UNIT_FACTOR**	1	**dtFLOAT**	-	-	2005
0..*	| | | | | | | | | | | | | | | | | |_ **PRICE_FLAG**	-	**dtBOOLEAN**	-	-	-
1	| | | | | | | | | | | | |_ CHOICE	-	-	-	-	-
1	| | | | | | | | | | | | | |_ **CONFIG_FEATURE**	-	-	-	-	2005
1	| | | | | | | | | | | | | | |_ SEQUENCE	-	-	-	-	-
1	| | | | | | | | | | | | | | |_ CHOICE	-	-	-	-	-
1	| | | | | | | | | | | | | | | |_ **FREF**	-	-	-	-	2005
1	| | | | | | | | | | | | | | | |_ SEQUENCE	-	-	-	-	-
1	| | | | | | | | | | | | | | | | |_ **REFERENCE_FEATURE_SYSTEM_NAME**	-	**dtSTRING**	80	-	-
1	| | | | | | | | | | | | | | | | |_ **FT_IDREF**	-	**dtSTRING**	60	-	-
1	| | | | | | | | | | | | | | | |_ **FTEMPLATE**	-	-	-	-	2005
1	| | | | | | | | | | | | | | | | |_ SEQUENCE	-	-	-	-	-
1	| | | | | | | | | | | | | | | | |_ **FT_ID**	-	**dtSTRING**	60	-	-
1	| | | | | | | | | | | | | | | | |_ **FT_NAME**	-	**dtMLSTRING**	80	Yes	2005fd
0..1	| | | | | | | | | | | | | | | | |_ **FT_SHORTNAME**	-	**dtMLSTRING**	80	Yes	2005fd
0..1	| | | | | | | | | | | | | | | | |_ **FT_DESCR**	-	**dtMLSTRING**	16000	Yes	2005fd
0..1	| | | | | | | | | | | | | | | | |_ **FT_VERSION**	-	-	-	-	2005fd
1	| | | | | | | | | | | | | | | | | |_ SEQUENCE	-	-	-	-	-
1	| | | | | | | | | | | | | | | | | | |_ **VERSION**	-	**dtSTRING**	20	-	2005fd
0..1	| | | | | | | | | | | | | | | | | | |_ **VERSION_DATE**	-	**dtDATETIME**	-	-	2005fd
0..1	| | | | | | | | | | | | | | | | | | |_ **REVISION**	-	**dtSTRING**	20	-	2005fd
0..1	| | | | | | | | | | | | | | | | | | |_ **REVISION_DATE**	-	**dtDATETIME**	-	-	2005fd
0..1	| | | | | | | | | | | | | | | | | | |_ **ORIGINAL_DATE**	-	**dtDATETIME**	-	-	2005fd
0..1	| | | | | | | | | | | | | | | | | |_ CHOICE	-	-	-	-	-
0..1	| | | | | | | | | | | | | | | | | |_ **FT_GROUP_IDREF**	-	**dtSTRING**	60	-	2005
0..1	| | | | | | | | | | | | | | | | | |_ **FT_GROUP_NAME**	-	**dtMLSTRING**	80	Yes	2005
0..1	| | | | | | | | | | | | | | | | | |_ **FT_DEPENDENCIES**	-	-	-	-	2005
1	| | | | | | | | | | | | | | | | | |_ SEQUENCE	-	-	-	-	-
1..*	| | | | | | | | | | | | | | | | | | |_ **FT_IDREF**	-	**dtSTRING**	60	-	-
0..1	| | | | | | | | | | | | | | | | | |_ **FEATURE_CONTENT**	-	-	-	-	2005
1	| | | | | | | | | | | | | | | | | |_ SEQUENCE	-	-	-	-	-
1	| | | | | | | | | | | | | | | | | | |_ **FT_DATATYPE**	-	**dtSTRING**	20	-	-
0..1	| | | | | | | | | | | | | | | | | | |_ **FT_FACETS**	-	-	-	-	2005fd
1	| | | | | | | | | | | | | | | | | | | |_ SEQUENCE	-	-	-	-	-
1..4	| | | | | | | | | | | | | | | | | | | | |_ **FT_FACET**	-	**dtSTRING**	20	-	2005fd
0..1	| | | | | | | | | | | | | | | | | | |_ **FT_VALUES**	-	-	-	-	2005
1	| | | | | | | | | | | | | | | | | | | |_ SEQUENCE	-	-	-	-	-
1..*	| | | | | | | | | | | | | | | | | | | | |_ **FT_VALUE**	-	-	-	-	2005
1	| | | | | | | | | | | | | | | | | | | | | |_ SEQUENCE	-	-	-	-	-
1	| | | | | | | | | | | | | | | | | | | | | | |_ CHOICE	-	-	-	-	-
1	| | | | | | | | | | | | | | | | | | | | | | | |_ **VALUE_IDREF**	-	**dtSTRING**	60	-	2005fd
1	| | | | | | | | | | | | | | | | | | | | | | | |_ **VALUE_SIMPLE**	-	**dtSTRING**	80	-	2005fd
1	| | | | | | | | | | | | | | | | | | | | | | | |_ **VALUE_TEXT**	-	**dtMLSTRING**	80	Yes	2005fd
1	| | | | | | | | | | | | | | | | | | | | | | | |_ **VALUE_RANGE**	-	-	-	-	2005fd
1	| | | | | | | | | | | | | | | | | | | | | | | | |_ SEQUENCE	-	-	-	-	-

Copyright © 2022 BME e.V. - BMEcat® Version 2005.2
Copyright © 2010-2021 BME e.V. - BMEcat® Version 2005.1
Copyright © 2005-2009 BME e.V. - BMEcat® Version 2005
Copyright © 1998–2004 Fraunhofer IAO, Stuttgart; Universität Essen BLI - BMEcat® Version 1.2

Amount	Element name	Default value	Data type	Field length	Lang. specific	l.chg. in ver.
1	|_ **STARTVALUE**	-	**dtNUMBER**	-	-	2005fd
1	|_ **ENDVALUE**	-	**dtNUMBER**	-	-	2005fd
0..1	|_ **INTERVALVALUE**	-	**dtNUMBER**	-	-	2005fd
0..1	|_ **MIME_INFO**	-	-	-	-	-
1	|_ SEQUENCE	-	-	-	-	-
1..*	|_ **MIME**	-	-	-	-	-
1	|_ SEQUENCE	-	-	-	-	-
0..1	|_ **MIME_TYPE**	-	**dtSTRING**	100	-	2005.2
1	|_ **MIME_SOURCE**	-	**dtMLSTRING**	255	Yes	-
0..1	|_ **MIME_DESCR**	-	**dtMLSTRING**	250	Yes	-
0..1	|_ **MIME_ALT**	-	**dtMLSTRING**	80	Yes	2005fd
0..1	|_ **MIME_PURPOSE**	-	**dtSTRING**	20	-	2005fd
0..1	|_ **MIME_ORDER**	-	**dtINTEGER**	-	-	-
0..1	|_ **CONFIG_INFO**	-	-	-	-	2005fd
1	|_ SEQUENCE	-	-	-	-	-
1	|_ **CONFIG_CODE**	-	**dtSTRING**	50	-	2005fd
0..1	|_ **PRODUCT_PRICE_DETAILS**	-	-	-	-	2005fd
1	|_ SEQUENCE	-	-	-	-	-
0..1	|_ CHOICE	-	-	-	-	-
0..1	|_ SEQUENCE	-	-	-	-	-
0..1	|_ **VALID_START_DATE**	-	**dtDATETIME**	-	-	2005fd
0..1	|_ **VALID_END_DATE**	-	**dtDATETIME**	-	-	2005fd
0..2	|_ **DATETIME** in the context of ARTICLE_PRICE_DETAILS	-	-	-	-	-
1	|_ SEQUENCE	-	-	-	-	-
1	|_ **DATE**	-	**dtDATETYPE**	-	-	-
0..1	|_ **TIME**	-	**dtTIMETYPE**	-	-	-
0..1	|_ **TIMEZONE**	-	**dtTIMEZONETYPE**	-	-	-
0..1	|_ **DAILY_PRICE**	-	**dtBOOLEAN**	-	-	-
1..*	|_ **PRODUCT_PRICE**	-	-	-	-	2005
1	|_ SEQUENCE	-	-	-	-	-
0..1	|_ CHOICE	-	-	-	-	-
0..1	|_ **PRICE_AMOUNT**	-	**dtNUMBER**	-	-	-
0..1	|_ **PRICE_FORMULA**	-	-	-	-	2005fd
1	|_ SEQUENCE	-	-	-	-	-
1	|_ **FORMULA_IDREF**	-	**dtSTRING**	60	-	2005fd
0..1	|_ **PARAMETERS**	-	-	-	-	2005fd
1	|_ SEQUENCE	-	-	-	-	-
1..*	|_ **PARAMETER**	-	-	-	-	2005fd
1	|_ SEQUENCE	-	-	-	-	-
1	|_ **PARAMETER_SYMBOLREF**	-	**dtSTRING**	60	-	2005fd
1	|_ **PARAMETER_VALUE**	-	**dtSTRING**	250	-	2005fd
0..1	|_ **PRICE_CURRENCY**	-	**dtCURRENCIES**	-	-	2005.2
0..1	|_ CHOICE	-	-	-	-	-
0..*	|_ **TAX_DETAILS**	-	-	-	-	2005
1	|_ SEQUENCE	-	-	-	-	-

Copyright © 2022 BME e.V. - BMEcat® Version 2005.2
Copyright © 2010-2021 BME e.V. - BMEcat® Version 2005.1
Copyright © 2005-2009 BME e.V. - BMEcat® Version 2005
Copyright © 1998–2004 Fraunhofer IAO, Stuttgart; Universität Essen BLI - BMEcat® Version 1.2

Amount	Element name	Default value	Data type	Field length	Lang. specific	l.chg. in ver.
0..1	|_ CALCULATION_SEQUENCE	1	dtCOUNT	-	-	2005fd
0..1	|_ TAX_CATEGORY	-	dtSTRING	80	-	2005
0..1	|_ TAX_TYPE	vat	dtSTRING	250	-	2005
0..1	|_ TAX	-	dtNUMBER	-	-	-
0..1	|_ EXEMPTION_REASON	-	dtMLSTRING	250	Yes	2005
0..1	|_ JURISDICTION	-	dtMLSTRING	250	Yes	2005
0..1	|_ TAX	-	dtNUMBER	-	-	-
0..1	|_ PRICE_FACTOR	1	dtNUMBER	-	-	2005
0..1	|_ LOWER_BOUND	-	dtNUMBER	-	-	-
0..1	|_ CHOICE	-	-	-	-	-
0..*	|_ TERRITORY	-	dtCOUNTRIES	-	-	1.2_fd
0..1	|_ AREA_REFS	-	-	-	-	2005fd
1	|_ SEQUENCE	-	-	-	-	-
1..*	|_ AREA_IDREF	-	dtSTRING	60	-	2005fd
0..1	|_ PRICE_BASE	-	-	-	-	2005fd
1	|_ SEQUENCE	-	-	-	-	-
1	|_ PRICE_UNIT	-	dtPUNIT	-	-	1.2_fd
0..1	|_ PRICE_UNIT_FACTOR	1	dtFLOAT	-	-	2005
0..*	|_ PRICE_FLAG	-	dtBOOLEAN	-	-	-
0..1	|_ VALUE_ORDER	-	dtINTEGER	-	-	2005fd
0..1	|_ DEFAULT_FLAG	-	dtBOOLEAN	-	-	2005fd
0..1	|_ FT_VALENCY	univalent	dtSTRING	20	-	2005fd
0..1	|_ CHOICE	-	-	-	-	-
0..1	|_ FT_UNIT_IDREF	-	dtSTRING	60	-	2005fd
0..1	|_ FT_UNIT	-	dtSTRING	80	-	2005fd
0..1	|_ FT_MANDATORY	-	dtBOOLEAN	-	-	-
0..1	|_ FT_ORDER	-	dtINTEGER	-	-	-
0..1	|_ FT_SYMBOL	-	dtMLSTRING	20	Yes	1.2
0..1	|_ FT_SYNONYMS	-	-	-	-	2005fd
1	|_ SEQUENCE	-	-	-	-	-
1	|_ SYNONYM	-	dtMLSTRING	80	Yes	2005fd
0..1	|_ MIME_INFO	-	-	-	-	-
1	|_ SEQUENCE	-	-	-	-	-
1..*	|_ MIME	-	-	-	-	-
1	|_ SEQUENCE	-	-	-	-	-
0..1	|_ MIME_TYPE	-	dtSTRING	100	-	2005.2
1	|_ MIME_SOURCE	-	dtMLSTRING	255	Yes	-
0..1	|_ MIME_DESCR	-	dtMLSTRING	250	Yes	-
0..1	|_ MIME_ALT	-	dtMLSTRING	80	Yes	2005fd
0..1	|_ MIME_PURPOSE	-	dtSTRING	20	-	2005fd
0..1	|_ MIME_ORDER	-	dtINTEGER	-	-	-
0..1	|_ FT_SOURCE	-	-	-	-	2005
1	|_ SEQUENCE	-	-	-	-	-
0..1	|_ SOURCE_NAME	-	dtMLSTRING	80	Yes	2005
0..1	|_ SOURCE_URI	-	dtSTRING	255	-	2005fd

Copyright © 2022 BME e.V. - BMEcat® Version 2005.2
Copyright © 2010-2021 BME e.V. - BMEcat® Version 2005.1
Copyright © 2005-2009 BME e.V. - BMEcat® Version 2005
Copyright © 1998–2004 Fraunhofer IAO, Stuttgart; Universität Essen BLI - BMEcat® Version 1.2

Amount	Element name	Default value	Data type	Field length	Lang. specific	l.chg. in ver.
0..1	| | | | | | | | | | | | | | | | | | | | | | |_ **PARTY_IDREF**	-	**dtSTRING**	250	-	2005fd
0..1	| | | | | | | | | | | | | | | | | | | | | |_ **FT_NOTE**	-	**dtMLSTRING**	16000	Yes	2005fd
0..1	| | | | | | | | | | | | | | | | | | | | | |_ **FT_REMARK**	-	**dtMLSTRING**	16000	Yes	2005fd
0..1	| | | | | | | | | | | | | | | | | | | | |_ **MIME_INFO**	-	-	-	-	-
1	| | | | | | | | | | | | | | | | | | | | |_ SEQUENCE	-	-	-	-	-
1..*	| | | | | | | | | | | | | | | | | | | | | |_ **MIME**	-	-	-	-	-
1	| | | | | | | | | | | | | | | | | | | | | | |_ SEQUENCE	-	-	-	-	-
0..1	| | | | | | | | | | | | | | | | | | | | | | |_ **MIME_TYPE**	-	**dtSTRING**	100	-	2005.2
1	| | | | | | | | | | | | | | | | | | | | | | |_ **MIME_SOURCE**	-	**dtMLSTRING**	255	Yes	-
0..1	| | | | | | | | | | | | | | | | | | | | | | |_ **MIME_DESCR**	-	**dtMLSTRING**	250	Yes	-
0..1	| | | | | | | | | | | | | | | | | | | | | | |_ **MIME_ALT**	-	**dtMLSTRING**	80	Yes	2005fd
0..1	| | | | | | | | | | | | | | | | | | | | | | |_ **MIME_PURPOSE**	-	**dtSTRING**	20	-	2005fd
0..1	| | | | | | | | | | | | | | | | | | | | | | |_ **MIME_ORDER**	-	**dtINTEGER**	-	-	-
1	| | | | | | | | | | | | | |_ **CONFIG_PARTS**	-	-	-	-	2005fd
1	| | | | | | | | | | | | | | |_ SEQUENCE	-	-	-	-	-
1..*	| | | | | | | | | | | | | | |_ **PART_ALTERNATIVE**	-	-	-	-	2005fd
1	| | | | | | | | | | | | | | |_ SEQUENCE	-	-	-	-	-
1	| | | | | | | | | | | | | | |_ **SUPPLIER_PIDREF**	-	**dtSTRING**	32	-	2005fd
0..1	| | | | | | | | | | | | | | |_ **SUPPLIER_IDREF**	-	**dtSTRING**	250	-	2005fd
0..1	| | | | | | | | | | | | | | |_ **PRODUCT_ORDER**	-	**dtINTEGER**	-	-	2005fd
0..1	| | | | | | | | | | | | | | |_ **DEFAULT_FLAG**	-	**dtBOOLEAN**	-	-	2005fd
0..1	| | | | | | | | | | | | | | |_ **CONFIG_CODE**	-	**dtSTRING**	50	-	2005fd
0..1	| | | | | | | | | | | | | | |_ **PRODUCT_PRICE_DETAILS**	-	-	-	-	2005fd
1	| | | | | | | | | | | | | | |_ SEQUENCE	-	-	-	-	-
0..1	| | | | | | | | | | | | | | | |_ CHOICE	-	-	-	-	-
0..1	| | | | | | | | | | | | | | | | |_ SEQUENCE	-	-	-	-	-
0..1	| | | | | | | | | | | | | | | | | |_ **VALID_START_DATE**	-	**dtDATETIME**	-	-	2005fd
0..1	| | | | | | | | | | | | | | | | | |_ **VALID_END_DATE**	-	**dtDATETIME**	-	-	2005fd
0..2	| | | | | | | | | | | | | | | | | |_ **DATETIME** in the context of ARTICLE_PRICE_DETAILS	-	-	-	-	-
1	| | | | | | | | | | | | | | | | | | |_ SEQUENCE	-	-	-	-	-
1	| | | | | | | | | | | | | | | | | | | |_ **DATE**	-	**dtDATETYPE**	-	-	-
0..1	| | | | | | | | | | | | | | | | | | | |_ **TIME**	-	**dtTIMETYPE**	-	-	-
0..1	| | | | | | | | | | | | | | | | | | | |_ **TIMEZONE**	-	**dtTIMEZONETYPE**	-	-	-
0..1	| | | | | | | | | | | | | | | | | |_ **DAILY_PRICE**	-	**dtBOOLEAN**	-	-	-
1..*	| | | | | | | | | | | | | | | | | |_ **PRODUCT_PRICE**	-	-	-	-	2005
1	| | | | | | | | | | | | | | | | | |_ SEQUENCE	-	-	-	-	-
0..1	| | | | | | | | | | | | | | | | | | |_ CHOICE	-	-	-	-	-
0..1	| | | | | | | | | | | | | | | | | | | |_ **PRICE_AMOUNT**	-	**dtNUMBER**	-	-	-
0..1	| | | | | | | | | | | | | | | | | | | |_ **PRICE_FORMULA**	-	-	-	-	2005fd
1	| | | | | | | | | | | | | | | | | | | | |_ SEQUENCE	-	-	-	-	-
1	| | | | | | | | | | | | | | | | | | | | | |_ **FORMULA_IDREF**	-	**dtSTRING**	60	-	2005fd
0..1	| | | | | | | | | | | | | | | | | | | | | |_ **PARAMETERS**	-	-	-	-	2005fd
1	| | | | | | | | | | | | | | | | | | | | | | |_ SEQUENCE	-	-	-	-	-
1..*	| | | | | | | | | | | | | | | | | | | | | | | |_ **PARAMETER**	-	-	-	-	2005fd
1	| | | | | | | | | | | | | | | | | | | | | | | | |_ SEQUENCE	-	-	-	-	-

Copyright © 2022 BME e.V. - BMEcat® Version 2005.2
Copyright © 2010-2021 BME e.V. - BMEcat® Version 2005.1
Copyright © 2005-2009 BME e.V. - BMEcat® Version 2005
Copyright © 1998–2004 Fraunhofer IAO, Stuttgart; Universität Essen BLI - BMEcat® Version 1.2

Amount	Element name	Default value	Data type	Field length	Lang. specific	l.chg. in ver.
1	|_ **PARAMETER_SYMBOLREF**	-	**dtSTRING**	60	-	2005fd
1	|_ **PARAMETER_VALUE**	-	**dtSTRING**	250	-	2005fd
0..1	|_ **PRICE_CURRENCY**	-	**dtCURRENCIES**	-	-	2005.2
0..1	|_ CHOICE	-	-	-	-	-
0..*	|_ **TAX_DETAILS**	-	-	-	-	2005
1	|_ SEQUENCE	-	-	-	-	-
0..1	|_ **CALCULATION_SEQUENCE**	1	**dtCOUNT**	-	-	2005fd
0..1	|_ **TAX_CATEGORY**	-	**dtSTRING**	80	-	2005
0..1	|_ **TAX_TYPE**	vat	**dtSTRING**	250	-	2005
0..1	|_ **TAX**	-	**dtNUMBER**	-	-	-
0..1	|_ **EXEMPTION_REASON**	-	**dtMLSTRING**	250	Yes	2005
0..1	|_ **JURISDICTION**	-	**dtMLSTRING**	250	Yes	2005
0..1	|_ **TAX**	-	**dtNUMBER**	-	-	-
0..1	|_ **PRICE_FACTOR**	1	**dtNUMBER**	-	-	2005
0..1	|_ **LOWER_BOUND**	-	**dtNUMBER**	-	-	-
0..1	|_ CHOICE	-	-	-	-	-
0..*	|_ **TERRITORY**	-	**dtCOUNTRIES**	-	-	1.2_fd
0..1	|_ **AREA_REFS**	-	-	-	-	2005fd
1	|_ SEQUENCE	-	-	-	-	-
1..*	|_ **AREA_IDREF**	-	**dtSTRING**	60	-	2005fd
0..1	|_ **PRICE_BASE**	-	-	-	-	2005fd
1	|_ SEQUENCE	-	-	-	-	-
1	|_ **PRICE_UNIT**	-	**dtPUNIT**	-	-	1.2_fd
0..1	|_ **PRICE_UNIT_FACTOR**	1	**dtFLOAT**	-	-	2005
0..*	|_ **PRICE_FLAG**	-	**dtBOOLEAN**	-	-	-
0..1	|_ **PART_SELECTION_TYPE**	non-distinct	**dtSTRING**	20	-	2005fd
1	|_ **MIN_OCCURANCE**	-	**dtCOUNT**	-	-	2005fd
1	|_ **MAX_OCCURANCE**	-	**dtCOUNT**	-	-	2005fd
0..1	|_ **PREDEFINED_CONFIGS**	-	-	-	-	2005fd
1	|_ SEQUENCE	-	-	-	-	-
1..*	|_ **PREDEFINED_CONFIG**	-	-	-	-	2005fd
1	|_ SEQUENCE	-	-	-	-	-
1	|_ **PREDEFINED_CONFIG_CODE**	-	**dtSTRING**	6000	-	2005fd
0..1	|_ **PREDEFINED_CONFIG_NAME**	-	**dtMLSTRING**	100	Yes	2005fd
0..1	|_ **PREDEFINED_CONFIG_DESCR**	-	**dtMLSTRING**	250	Yes	2005fd
0..1	|_ **PREDEFINED_CONFIG_ORDER**	-	**dtINTEGER**	-	-	2005fd
0..1	|_ **PRODUCT_PRICE_DETAILS**	-	-	-	-	2005fd
1	|_ SEQUENCE	-	-	-	-	-
0..1	|_ CHOICE	-	-	-	-	-
0..1	|_ SEQUENCE	-	-	-	-	-
0..1	|_ **VALID_START_DATE**	-	**dtDATETIME**	-	-	2005fd
0..1	|_ **VALID_END_DATE**	-	**dtDATETIME**	-	-	2005fd
0..2	|_ **DATETIME** in the context of ARTICLE_PRICE_DETAILS	-	-	-	-	-
1	|_ SEQUENCE	-	-	-	-	-

Copyright © 2022 BME e.V. - BMEcat® Version 2005.2
Copyright © 2010-2021 BME e.V. - BMEcat® Version 2005.1
Copyright © 2005-2009 BME e.V. - BMEcat® Version 2005
Copyright © 1998–2004 Fraunhofer IAO, Stuttgart; Universität Essen BLI - BMEcat® Version 1.2

Amount	Element name	Default value	Data type	Field length	Lang. specific	l.chg. in ver.
1	|_ **DATE**	-	**dtDATETYPE**	-	-	-
0..1	|_ **TIME**	-	**dtTIMETYPE**	-	-	-
0..1	|_ **TIMEZONE**	-	**dtTIMEZONETYPE**	-	-	-
0..1	|_ **DAILY_PRICE**	-	**dtBOOLEAN**	-	-	-
1..*	|_ **PRODUCT_PRICE**	-	-	-	-	2005
1	|_ SEQUENCE	-	-	-	-	-
0..1	|_ CHOICE	-	-	-	-	-
0..1	|_ **PRICE_AMOUNT**	-	**dtNUMBER**	-	-	-
0..1	|_ **PRICE_FORMULA**	-	-	-	-	2005fd
1	|_ SEQUENCE	-	-	-	-	-
1	|_ **FORMULA_IDREF**	-	**dtSTRING**	60	-	2005fd
0..1	|_ **PARAMETERS**	-	-	-	-	2005fd
1	|_ SEQUENCE	-	-	-	-	-
1..*	|_ **PARAMETER**	-	-	-	-	2005fd
1	|_ SEQUENCE	-	-	-	-	-
1	|_ **PARAMETER_SYMBOLREF**	-	**dtSTRING**	60	-	2005fd
1	|_ **PARAMETER_VALUE**	-	**dtSTRING**	250	-	2005fd
0..1	|_ **PRICE_CURRENCY**	-	**dtCURRENCIES**	-	-	2005.2
0..1	|_ CHOICE	-	-	-	-	-
0..*	|_ **TAX_DETAILS**	-	-	-	-	2005
1	|_ SEQUENCE	-	-	-	-	-
0..1	|_ **CALCULATION_SEQUENCE**	1	**dtCOUNT**	-	-	2005fd
0..1	|_ **TAX_CATEGORY**	-	**dtSTRING**	80	-	2005
0..1	|_ **TAX_TYPE**	vat	**dtSTRING**	250	-	2005
0..1	|_ **TAX**	-	**dtNUMBER**	-	-	-
0..1	|_ **EXEMPTION_REASON**	-	**dtMLSTRING**	250	Yes	2005
0..1	|_ **JURISDICTION**	-	**dtMLSTRING**	250	Yes	2005
0..1	|_ **TAX**	-	**dtNUMBER**	-	-	-
0..1	|_ **PRICE_FACTOR**	1	**dtNUMBER**	-	-	2005
0..1	|_ **LOWER_BOUND**	-	**dtNUMBER**	-	-	-
0..1	|_ CHOICE	-	-	-	-	-
0..*	|_ **TERRITORY**	-	**dtCOUNTRIES**	-	-	1.2_fd
0..1	|_ **AREA_REFS**	-	-	-	-	2005fd
1	|_ SEQUENCE	-	-	-	-	-
1..*	|_ **AREA_IDREF**	-	**dtSTRING**	60	-	2005fd
0..1	|_ **PRICE_BASE**	-	-	-	-	2005fd
1	|_ SEQUENCE	-	-	-	-	-
1	|_ **PRICE_UNIT**	-	**dtPUNIT**	-	-	1.2_fd
0..1	|_ **PRICE_UNIT_FACTOR**	1	**dtFLOAT**	-	-	2005
0..*	|_ **PRICE_FLAG**	-	**dtBOOLEAN**	-	-	-
0..1	|_ **SUPPLIER_PID**	-	**dtSTRING**	32	-	2005
0..*	|_ **INTERNATIONAL_PID**	-	**dtSTRING**	100	-	2005fd
0..1	|_ **PREDEFINED_CONFIG_COVERAGE**	partial	**dtSTRING**	20	-	2005fd
0..1	|_ **CONFIG_RULES**	-	-	-	-	-
1	|_ SEQUENCE	-	-	-	-	-

Copyright © 2022 BME e.V. - BMEcat® Version 2005.2
Copyright © 2010-2021 BME e.V. - BMEcat® Version 2005.1
Copyright © 2005-2009 BME e.V. - BMEcat® Version 2005
Copyright © 1998–2004 Fraunhofer IAO, Stuttgart; Universität Essen BLI - BMEcat® Version 1.2

Amount	Element name	Default value	Data type	Field length	Lang. specific	l.chg. in ver.
1..*	| | | | | | | | | | | | |_ **TERM**	-	-	-	-	2005fd
1	| | | | | | | | | | | | | |_ SEQUENCE	-	-	-	-	-
1	| | | | | | | | | | | | | | |_ **TERM_ID**	-	**dtSTRING**	20	-	2005fd
0..1	| | | | | | | | | | | | | | |_ **TERM_CONDITION**	-	**dtSTRING**	3000	-	2005fd
1	| | | | | | | | | | | | | | |_ **TERM_EXPRESSION**	-	**dtSTRING**	3000	-	2005fd
0..1	| | | | | | | | | | |_ **CONFIG_FORMULAS**	-	-	-	-	2005fd
1	| | | | | | | | | | | |_ SEQUENCE	-	-	-	-	-
1	| | | | | | | | | | | | |_ **CONFIG_FORMULA**	-	-	-	-	2005fd
1	| | | | | | | | | | | | | |_ SEQUENCE	-	-	-	-	-
1	| | | | | | | | | | | | | | |_ **FORMULA_IDREF**	-	**dtSTRING**	60	-	2005fd
0..1	| | | | | | | | | | | | | | |_ **PARAMETERS**	-	-	-	-	2005fd
1	| | | | | | | | | | | | | | |_ SEQUENCE	-	-	-	-	-
1..*	| | | | | | | | | | | | | | | |_ **PARAMETER**	-	-	-	-	2005fd
1	| | | | | | | | | | | | | | | |_ SEQUENCE	-	-	-	-	-
1	| | | | | | | | | | | | | | | | |_ **PARAMETER_SYMBOLREF**	-	**dtSTRING**	60	-	2005fd
1	| | | | | | | | | | | | | | | | |_ **PARAMETER_VALUE**	-	**dtSTRING**	250	-	2005fd
0..*	| | | | | | |_ **PRODUCT_TO_CATALOGGROUP_MAP** in context T_UPDATE_PRODUCTS	-	-	-	-	2005fd
1	| | | | | | | |_ SEQUENCE	-	-	-	-	-
1	| | | | | | | | |_ **PROD_ID**	-	**dtSTRING**	32	-	-
0..1	| | | | | | | | |_ **SUPPLIER_IDREF**	-	**dtSTRING**	250	-	2005fd
1	| | | | | | | | |_ **CATALOG_GROUP_ID**	-	**dtSTRING**	50	-	-
0..1	| | | | | | | | |_ **PRODUCT_TO_CATALOGGROUP_MAP_ORDER**	-	**dtINTEGER**	-	-	1.2
1	| | | | | |_ SEQUENCE	-	-	-	-	-
1..*	| | | | | | |_ **ARTICLE** in context T_UPDATE_PRODUCTS	-	-	-	-	-
1	| | | | | | | |_ SEQUENCE	-	-	-	-	-
1	| | | | | | | | |_ **SUPPLIER_AID**	-	**dtSTRING**	32	-	-
0..1	| | | | | | | | |_ **SUPPLIER_IDREF**	-	**dtSTRING**	250	-	2005fd
1	| | | | | | | | |_ **ARTICLE_DETAILS**	-	-	-	-	-
1	| | | | | | | | | |_ SEQUENCE	-	-	-	-	-
1	| | | | | | | | | | |_ **DESCRIPTION_SHORT**	-	**dtMLSTRING**	150	Yes	-
0..1	| | | | | | | | | | |_ **DESCRIPTION_LONG**	-	**dtMLSTRING**	64000	Yes	1.2_fd
0..1	| | | | | | | | | | |_ CHOICE	-	-	-	-	-
0..*	| | | | | | | | | | | |_ **INTERNATIONAL_AID**	-	**dtSTRING**	100	-	-
0..1	| | | | | | | | | | | |_ **EAN**	-	**dtSTRING**	14	-	-
0..1	| | | | | | | | | | |_ **SUPPLIER_ALT_AID**	-	**dtSTRING**	50	-	-
0..*	| | | | | | | | | | |_ **BUYER_AID**	-	**dtSTRING**	50	-	-
0..1	| | | | | | | | | | |_ **MANUFACTURER_AID**	-	**dtSTRING**	50	-	-
0..1	| | | | | | | | | | |_ CHOICE	-	-	-	-	-
0..1	| | | | | | | | | | | |_ **MANUFACTURER_IDREF**	-	**dtSTRING**	250	-	2005fd
0..1	| | | | | | | | | | | |_ **MANUFACTURER_NAME**	-	**dtSTRING**	50	-	-
0..1	| | | | | | | | | | |_ **MANUFACTURER_TYPE_DESCR**	-	**dtMLSTRING**	50	Yes	1.2_fd
0..1	| | | | | | | | | | |_ **ERP_GROUP_BUYER**	-	**dtSTRING**	10	-	-
0..1	| | | | | | | | | | |_ **ERP_GROUP_SUPPLIER**	-	**dtSTRING**	10	-	-
0..1	| | | | | | | | | | |_ **DELIVERY_TIME**	-	**dtNUMBER**	-	-	1.2_fd
0..*	| | | | | | | | | | |_ **SPECIAL_TREATMENT_CLASS**	-	**dtSTRING**	20	-	-

Copyright © 2022 BME e.V. - BMEcat® Version 2005.2
Copyright © 2010-2021 BME e.V. - BMEcat® Version 2005.1
Copyright © 2005-2009 BME e.V. - BMEcat® Version 2005
Copyright © 1998–2004 Fraunhofer IAO, Stuttgart; Universität Essen BLI - BMEcat® Version 1.2

Amount	Element name	Default value	Data type	Field length	Lang. specific	l.chg. in ver.
0..1	| | | | | | | | | | |_ **KEYWORD**	-	**dtMLSTRING**	50	Yes	-
0..1	| | | | | | | | | | |_ **REMARKS**	-	**dtMLSTRING**	64000	Yes	-
0..1	| | | | | | | | | | |_ **SEGMENT**	-	**dtMLSTRING**	100	Yes	1.2_fd
0..1	| | | | | | | | | | |_ **ARTICLE_ORDER**	-	**dtINTEGER**	-	-	-
0..1	| | | | | | | | | | |_ **ARTICLE_STATUS**	-	**dtMLSTRING**	250	Yes	-
0..*	| | | | | | | | | | |_ **INTERNATIONAL_RESTRICTIONS**	-	**dtSTRING**	250	-	2005fd
0..1	| | | | | | | | | | |_ **ACCOUNTING_INFO**	-	-	-	-	2005fd
1	| | | | | | | | | | | |_ SEQUENCE	-	-	-	-	-
1	| | | | | | | | | | | | |_ **COST_CATEGORY_ID**	-	**dtSTRING**	64	-	2005fd
0..1	| | | | | | | | | | | | |_ **COST_TYPE**	-	**dtSTRING**	64	-	2005fd
0..1	| | | | | | | | | | | | |_ **COST_ACCOUNT**	-	**dtSTRING**	64	-	2005fd
0..1	| | | | | | | | | | |_ **AGREEMENT_REF**	-	-	-	-	2005fd
1	| | | | | | | | | | | |_ SEQUENCE	-	-	-	-	-
1	| | | | | | | | | | | | |_ **AGREEMENT_IDREF**	-	**dtSTRING**	50	-	2005fd
0..1	| | | | | | | | | | | | |_ **AGREEMENT_LINE_IDREF**	-	**dtSTRING**	50	-	2005fd
0..*	| | | | | | | | | | |_ **ARTICLE_TYPE**	-	**dtSTRING**	50	-	-
0..1	| | | | | | | | | | |_ **ARTICLE_CATEGORY**	-	**dtSTRING**	20	-	-
0..*	| | | | | | | | |_ **ARTICLE_FEATURES**	-	-	-	-	-
1	| | | | | | | | | |_ SEQUENCE	-	-	-	-	-
0..1	| | | | | | | | | | |_ **REFERENCE_FEATURE_SYSTEM_NAME**	-	**dtSTRING**	80	-	-
0..1	| | | | | | | | | | |_ CHOICE	-	-	-	-	-
0..*	| | | | | | | | | | | |_ **REFERENCE_FEATURE_GROUP_ID**	-	**dtSTRING**	60	-	-
0..1	| | | | | | | | | | | |_ **REFERENCE_FEATURE_GROUP_NAME**	-	**dtMLSTRING**	60	Yes	-
0..*	| | | | | | | | | | |_ **REFERENCE_FEATURE_GROUP_ID2**	-	**dtSTRING**	60	-	2005fd
0..1	| | | | | | | | | | |_ **CLASSIFICATION_GROUP_ARTICLEORDER**	-	**dtINTEGER**	-	-	-
0..*	| | | | | | | | | | |_ **FEATURE**	-	-	-	-	2005.2
1	| | | | | | | | | | | |_ SEQUENCE	-	-	-	-	-
1	| | | | | | | | | | | | |_ CHOICE	-	-	-	-	-
1	| | | | | | | | | | | | | |_ **FNAME**	-	**dtMLSTRING**	80	Yes	2005.2
1	| | | | | | | | | | | | | |_ **FT_IDREF**	-	**dtSTRING**	60	-	-
1	| | | | | | | | | | | | | |_ **FTEMPLATE**	-	-	-	-	2005
1	| | | | | | | | | | | | | | |_ SEQUENCE	-	-	-	-	-
1	| | | | | | | | | | | | | | | |_ **FT_ID**	-	**dtSTRING**	60	-	-
1	| | | | | | | | | | | | | | | |_ **FT_NAME**	-	**dtMLSTRING**	80	Yes	2005fd
0..1	| | | | | | | | | | | | | | | |_ **FT_SHORTNAME**	-	**dtMLSTRING**	80	Yes	2005fd
0..1	| | | | | | | | | | | | | | | |_ **FT_DESCR**	-	**dtMLSTRING**	16000	Yes	2005fd
0..1	| | | | | | | | | | | | | | | |_ **FT_VERSION**	-	-	-	-	2005fd
1	| | | | | | | | | | | | | | | | |_ SEQUENCE	-	-	-	-	-
1	| | | | | | | | | | | | | | | | | |_ **VERSION**	-	**dtSTRING**	20	-	2005fd
0..1	| | | | | | | | | | | | | | | | | |_ **VERSION_DATE**	-	**dtDATETIME**	-	-	2005fd
0..1	| | | | | | | | | | | | | | | | | |_ **REVISION**	-	**dtSTRING**	20	-	2005fd
0..1	| | | | | | | | | | | | | | | | | |_ **REVISION_DATE**	-	**dtDATETIME**	-	-	2005fd
0..1	| | | | | | | | | | | | | | | | | |_ **ORIGINAL_DATE**	-	**dtDATETIME**	-	-	2005fd
0..1	| | | | | | | | | | | | | | | | |_ CHOICE	-	-	-	-	-
0..1	| | | | | | | | | | | | | | | | | |_ **FT_GROUP_IDREF**	-	**dtSTRING**	60	-	2005

Copyright © 2022 BME e.V. - BMEcat® Version 2005.2
Copyright © 2010-2021 BME e.V. - BMEcat® Version 2005.1
Copyright © 2005-2009 BME e.V. - BMEcat® Version 2005
Copyright © 1998–2004 Fraunhofer IAO, Stuttgart; Universität Essen BLI - BMEcat® Version 1.2

Amount	Element name	Default value	Data type	Field length	Lang. specific	l.chg. in ver.
0..1	|_ **FT_GROUP_NAME**	-	**dtMLSTRING**	80	Yes	2005
0..1	|_ **FT_DEPENDENCIES**	-	-	-	-	2005
1	|_ SEQUENCE	-	-	-	-	-
1..*	| |_ **FT_IDREF**	-	**dtSTRING**	60	-	-
0..1	|_ **FEATURE_CONTENT**	-	-	-	-	2005
1	|_ SEQUENCE	-	-	-	-	-
1	| |_ **FT_DATATYPE**	-	**dtSTRING**	20	-	-
0..1	| |_ **FT_FACETS**	-	-	-	-	2005fd
1	| |_ SEQUENCE	-	-	-	-	-
1..4	| | |_ **FT_FACET**	-	**dtSTRING**	20	-	2005fd
0..1	| |_ **FT_VALUES**	-	-	-	-	2005
1	| |_ SEQUENCE	-	-	-	-	-
1..*	| | |_ **FT_VALUE**	-	-	-	-	2005
1	| | |_ SEQUENCE	-	-	-	-	-
1	| | | |_ CHOICE	-	-	-	-	-
1	| | | | |_ **VALUE_IDREF**	-	**dtSTRING**	60	-	2005fd
1	| | | | |_ **VALUE_SIMPLE**	-	**dtSTRING**	80	-	2005fd
1	| | | | |_ **VALUE_TEXT**	-	**dtMLSTRING**	80	Yes	2005fd
1	| | | | |_ **VALUE_RANGE**	-	-	-	-	2005fd
1	| | | | | |_ SEQUENCE	-	-	-	-	-
1	| | | | | | |_ **STARTVALUE**	-	**dtNUMBER**	-	-	2005fd
1	| | | | | | |_ **ENDVALUE**	-	**dtNUMBER**	-	-	2005fd
0..1	| | | | | | |_ **INTERVALVALUE**	-	**dtNUMBER**	-	-	2005fd
0..1	| | | | |_ **MIME_INFO**	-	-	-	-	-
1	| | | | |_ SEQUENCE	-	-	-	-	-
1..*	| | | | | |_ **MIME**	-	-	-	-	-
1	| | | | | | |_ SEQUENCE	-	-	-	-	-
0..1	| | | | | | | |_ **MIME_TYPE**	-	**dtSTRING**	100	-	2005.2
1	| | | | | | | |_ **MIME_SOURCE**	-	**dtMLSTRING**	255	Yes	-
0..1	| | | | | | | |_ **MIME_DESCR**	-	**dtMLSTRING**	250	Yes	-
0..1	| | | | | | | |_ **MIME_ALT**	-	**dtMLSTRING**	80	Yes	2005fd
0..1	| | | | | | | |_ **MIME_PURPOSE**	-	**dtSTRING**	20	-	2005fd
0..1	| | | | | | | |_ **MIME_ORDER**	-	**dtINTEGER**	-	-	-
0..1	| | | | |_ **CONFIG_INFO**	-	-	-	-	2005fd
1	| | | | |_ SEQUENCE	-	-	-	-	-
1	| | | | | |_ **CONFIG_CODE**	-	**dtSTRING**	50	-	2005fd
0..1	| | | | | |_ **PRODUCT_PRICE_DETAILS**	-	-	-	-	2005fd
1	| | | | | | |_ SEQUENCE	-	-	-	-	-
0..1	| | | | | | | |_ CHOICE	-	-	-	-	-
0..1	| | | | | | | | |_ SEQUENCE	-	-	-	-	-
0..1	| | | | | | | | | |_ **VALID_START_DATE**	-	**dtDATETIME**	-	-	2005fd
0..1	| | | | | | | | | |_ **VALID_END_DATE**	-	**dtDATETIME**	-	-	2005fd
0..2	| | | | | | | | | |_ **DATETIME** in the context of ARTICLE_PRICE_DETAILS	-	-	-	-	-
1	| | | | | | | | | | |_ SEQUENCE	-	-	-	-	-
1	| | | | | | | | | | | |_ **DATE**	-	**dtDATETYPE**	-	-	-

Copyright © 2022 BME e.V. - BMEcat® Version 2005.2
Copyright © 2010-2021 BME e.V. - BMEcat® Version 2005.1
Copyright © 2005-2009 BME e.V. - BMEcat® Version 2005
Copyright © 1998–2004 Fraunhofer IAO, Stuttgart; Universität Essen BLI - BMEcat® Version 1.2

Amount	Element name	Default value	Data type	Field length	Lang. specific	l.chg. in ver.
0..1	|_ **TIME**	-	**dtTIMETYPE**	-	-	-
0..1	|_ **TIMEZONE**	-	**dtTIMEZONETYPE**	-	-	-
0..1	**|_ DAILY_PRICE**	-	**dtBOOLEAN**	-	-	-
1..*	**|_ PRODUCT_PRICE**	-	-	-	-	2005
1	|_ SEQUENCE	-	-	-	-	-
0..1	|_ CHOICE	-	-	-	-	-
0..1	|_ **PRICE_AMOUNT**	-	**dtNUMBER**	-	-	-
0..1	|_ **PRICE_FORMULA**	-	-	-	-	2005fd
1	|_ SEQUENCE	-	-	-	-	-
1	|_ **FORMULA_IDREF**	-	**dtSTRING**	60	-	2005fd
0..1	|_ **PARAMETERS**	-	-	-	-	2005fd
1	|_ SEQUENCE	-	-	-	-	-
1..*	|_ **PARAMETER**	-	-	-	-	2005fd
1	|_ SEQUENCE	-	-	-	-	-
1	|_ **PARAMETER_SYMBOLREF**	-	**dtSTRING**	60	-	2005fd
1	|_ **PARAMETER_VALUE**	-	**dtSTRING**	250	-	2005fd
0..1	|_ **PRICE_CURRENCY**	-	**dtCURRENCIES**	-	-	2005.2
0..1	|_ CHOICE	-	-	-	-	-
0..*	|_ **TAX_DETAILS**	-	-	-	-	2005
1	|_ SEQUENCE	-	-	-	-	-
0..1	|_ **CALCULATION_SEQUENCE**	1	**dtCOUNT**	-	-	2005fd
0..1	|_ **TAX_CATEGORY**	-	**dtSTRING**	80	-	2005
0..1	|_ **TAX_TYPE**	vat	**dtSTRING**	250	-	2005
0..1	|_ **TAX**	-	**dtNUMBER**	-	-	-
0..1	|_ **EXEMPTION_REASON**	-	**dtMLSTRING**	250	Yes	2005
0..1	|_ **JURISDICTION**	-	**dtMLSTRING**	250	Yes	2005
0..1	**|_ TAX**	-	**dtNUMBER**	-	-	-
0..1	**|_ PRICE_FACTOR**	1	**dtNUMBER**	-	-	2005
0..1	**|_ LOWER_BOUND**	-	**dtNUMBER**	-	-	-
0..1	|_ CHOICE	-	-	-	-	-
0..*	|_ **TERRITORY**	-	**dtCOUNTRIES**	-	-	1.2_fd
0..1	|_ **AREA_REFS**	-	-	-	-	2005fd
1	|_ SEQUENCE	-	-	-	-	-
1..*	|_ **AREA_IDREF**	-	**dtSTRING**	60	-	2005fd
0..1	**|_ PRICE_BASE**	-	-	-	-	2005fd
1	|_ SEQUENCE	-	-	-	-	-
1	|_ **PRICE_UNIT**	-	**dtPUNIT**	-	-	1.2_fd
0..1	|_ **PRICE_UNIT_FACTOR**	1	**dtFLOAT**	-	-	2005
0..*	**|_ PRICE_FLAG**	-	**dtBOOLEAN**	-	-	-
0..1	|_ **VALUE_ORDER**	-	**dtINTEGER**	-	-	2005fd
0..1	|_ **DEFAULT_FLAG**	-	**dtBOOLEAN**	-	-	2005fd
0..1	**|_ FT_VALENCY**	univalent	**dtSTRING**	20	-	2005fd
0..1	|_ CHOICE	-	-	-	-	-
0..1	|_ **FT_UNIT_IDREF**	-	**dtSTRING**	60	-	2005fd
0..1	|_ **FT_UNIT**	-	**dtSTRING**	80	-	2005fd

Copyright © 2022 BME e.V. - BMEcat® Version 2005.2
Copyright © 2010-2021 BME e.V. - BMEcat® Version 2005.1
Copyright © 2005-2009 BME e.V. - BMEcat® Version 2005
Copyright © 1998–2004 Fraunhofer IAO, Stuttgart; Universität Essen BLI - BMEcat® Version 1.2

Amount	Element name	Default value	Data type	Field length	Lang. specific	l.chg. in ver.
0..1	|_ **FT_MANDATORY**	-	**dtBOOLEAN**	-	-	-
0..1	|_ **FT_ORDER**	-	**dtINTEGER**	-	-	-
0..1	|_ **FT_SYMBOL**	-	**dtMLSTRING**	20	Yes	1.2
0..1	|_ **FT_SYNONYMS**	-	-	-	-	2005fd
1	|_ SEQUENCE	-	-	-	-	-
1	|_ **SYNONYM**	-	**dtMLSTRING**	80	Yes	2005fd
0..1	|_ **MIME_INFO**	-	-	-	-	-
1	|_ SEQUENCE	-	-	-	-	-
1..*	|_ **MIME**	-	-	-	-	-
1	|_ SEQUENCE	-	-	-	-	-
0..1	|_ **MIME_TYPE**	-	**dtSTRING**	100	-	2005.2
1	|_ **MIME_SOURCE**	-	**dtMLSTRING**	255	Yes	-
0..1	|_ **MIME_DESCR**	-	**dtMLSTRING**	250	Yes	-
0..1	|_ **MIME_ALT**	-	**dtMLSTRING**	80	Yes	2005fd
0..1	|_ **MIME_PURPOSE**	-	**dtSTRING**	20	-	2005fd
0..1	|_ **MIME_ORDER**	-	**dtINTEGER**	-	-	-
0..1	|_ **FT_SOURCE**	-	-	-	-	2005
1	|_ SEQUENCE	-	-	-	-	-
0..1	|_ **SOURCE_NAME**	-	**dtMLSTRING**	80	Yes	2005
0..1	|_ **SOURCE_URI**	-	**dtSTRING**	255	-	2005fd
0..1	|_ **PARTY_IDREF**	-	**dtSTRING**	250	-	2005fd
0..1	|_ **FT_NOTE**	-	**dtMLSTRING**	16000	Yes	2005fd
0..1	|_ **FT_REMARK**	-	**dtMLSTRING**	16000	Yes	2005fd
1	|_ CHOICE	-	-	-	-	-
1..*	|_ CHOICE	-	-	-	-	-
1	|_ **FVALUE**	-	**dtMLSTRING**	-	Yes	2005.1
1..*	|_ **VALUE_IDREF**	-	**dtSTRING**	60	-	2005fd
1	|_ **VARIANTS**	-	-	-	-	1.2_fd
1	|_ SEQUENCE	-	-	-	-	-
1..*	|_ **VARIANT**	-	-	-	-	-
1	|_ SEQUENCE	-	-	-	-	-
1	|_ CHOICE	-	-	-	-	-
1	|_ **FVALUE**	-	**dtMLSTRING**	-	Yes	2005.1
1..*	|_ **VALUE_IDREF**	-	**dtSTRING**	60	-	2005fd
1	|_ **SUPPLIER_AID_SUPPLEMENT**	-	**dtSTRING**	31	-	-
1	|_ **VORDER**	-	**dtINTEGER**	-	-	-
0..1	|_ **FUNIT**	-	**dtSTRING**	20	-	-
0..1	|_ **FORDER**	-	**dtINTEGER**	-	-	-
0..1	|_ **FDESCR**	-	**dtMLSTRING**	250	Yes	1.2_fd
0..1	|_ **FVALUE_DETAILS**	-	**dtMLSTRING**	250	Yes	1.2_fd
0..1	|_ **FVALUE_TYPE**	-	**dtSTRING**	20	-	2005fd
0..1	|_ **FID**	-	**dtSTRING**	-	-	2005.1
0..1	|_ **FPARENT_ID**	-	**dtSTRING**	-	-	2005.1
0..*	|_ **FEATURE**	-	-	-	-	2005.2
1	|_ **ARTICLE_ORDER_DETAILS**	-	-	-	-	-

Copyright © 2022 BME e.V. - BMEcat® Version 2005.2
Copyright © 2010-2021 BME e.V. - BMEcat® Version 2005.1
Copyright © 2005-2009 BME e.V. - BMEcat® Version 2005
Copyright © 1998–2004 Fraunhofer IAO, Stuttgart; Universität Essen BLI - BMEcat® Version 1.2

Amount	Element name	Default value	Data type	Field length	Lang. specific	l.chg. in ver.
1	|_ SEQUENCE	-	-	-	-	-
1	|_ **ORDER_UNIT**	-	**dtPUNIT**	-	-	1.2_fd
0..1	|_ SEQUENCE	-	-	-	-	-
1	|_ **CONTENT_UNIT**	-	**dtPUNIT**	-	-	1.2_fd
0..1	|_ **NO_CU_PER_OU**	1	**dtNUMBER**	-	-	2005
0..1	|_ **SUPPLIER_PIDREF**	-	**dtSTRING**	32	-	2005fd
0..1	|_ **SUPPLIER_IDREF**	-	**dtSTRING**	250	-	2005fd
0..1	|_ **PRICE_QUANTITY**	1	**dtNUMBER**	-	-	2005
0..1	|_ **QUANTITY_MIN**	1	**dtFLOAT**	-	-	2005
0..1	|_ **QUANTITY_INTERVAL**	1	**dtFLOAT**	-	-	2005
0..1	|_ **QUANTITY_MAX**	-	**dtFLOAT**	-	-	2005fd
0..1	|_ **PACKING_UNITS**	-	-	-	-	2005fd
1	|_ SEQUENCE	-	-	-	-	-
1..*	|_ **PACKING_UNIT**	-	-	-	-	2005
1	|_ SEQUENCE	-	-	-	-	-
1	|_ **QUANTITY_MIN**	1	**dtFLOAT**	-	-	2005
1	|_ **QUANTITY_MAX**	-	**dtFLOAT**	-	-	2005fd
1	|_ **PACKING_UNIT_CODE**	-	**dtPUNIT**	-	-	1.2_fd
0..1	|_ **PACKING_UNIT_DESCR**	-	**dtMLSTRING**	250	Yes	2005fd
0..1	|_ CHOICE	-	-	-	-	-
1	|_ **SUPPLIER_PID**	-	**dtSTRING**	32	-	2005
0..1	|_ SEQUENCE	-	-	-	-	-
1	|_ **SUPPLIER_PIDREF**	-	**dtSTRING**	32	-	2005fd
0..1	|_ **SUPPLIER_IDREF**	-	**dtSTRING**	250	-	2005fd
1..*	|_ **ARTICLE_PRICE_DETAILS**	-	-	-	-	-
1	|_ SEQUENCE	-	-	-	-	-
1	|_ CHOICE	-	-	-	-	-
0..1	|_ SEQUENCE	-	-	-	-	-
0..1	|_ **VALID_START_DATE**	-	**dtDATETIME**	-	-	2005fd
0..1	|_ **VALID_END_DATE**	-	**dtDATETIME**	-	-	2005fd
0..2	|_ **DATETIME** in the context of CATALOG	-	-	-	-	-
1	|_ SEQUENCE	-	-	-	-	-
1	|_ **DATE**	-	**dtDATETYPE**	-	-	-
0..1	|_ **TIME**	-	**dtTIMETYPE**	-	-	-
0..1	|_ **TIMEZONE**	-	**dtTIMEZONETYPE**	-	-	-
0..1	|_ **DAILY_PRICE**	-	**dtBOOLEAN**	-	-	-
1..*	|_ **ARTICLE_PRICE**	-	-	-	-	-
1	|_ SEQUENCE	-	-	-	-	-
0..1	|_ CHOICE	-	-	-	-	-
0..1	|_ **PRICE_AMOUNT**	-	**dtNUMBER**	-	-	-
0..1	|_ **PRICE_FORMULA**	-	-	-	-	2005fd
1	|_ SEQUENCE	-	-	-	-	-
1	|_ **FORMULA_IDREF**	-	**dtSTRING**	60	-	2005fd
0..1	|_ **PARAMETERS**	-	-	-	-	2005fd
1	|_ SEQUENCE	-	-	-	-	-

Copyright © 2022 BME e.V. - BMEcat® Version 2005.2
Copyright © 2010-2021 BME e.V. - BMEcat® Version 2005.1
Copyright © 2005-2009 BME e.V. - BMEcat® Version 2005
Copyright © 1998–2004 Fraunhofer IAO, Stuttgart; Universität Essen BLI - BMEcat® Version 1.2

Amount	Element name	Default value	Data type	Field length	Lang. specific	l.chg. in ver.
1..*	| | | | | | | | | | | | | | | | |_ **PARAMETER**	-	-	-	-	2005fd
1	| | | | | | | | | | | | | | | | | |_ SEQUENCE	-	-	-	-	-
1	| | | | | | | | | | | | | | | | | | |_ **PARAMETER_SYMBOLREF**	-	**dtSTRING**	60	-	2005fd
1	| | | | | | | | | | | | | | | | | | |_ **PARAMETER_VALUE**	-	**dtSTRING**	250	-	2005fd
0..1	| | | | | | | | | | | | |_ **PRICE_CURRENCY**	-	**dtCURRENCIES**	-	-	2005.2
0..1	| | | | | | | | | | | | |_ CHOICE	-	-	-	-	-
0..*	| | | | | | | | | | | | | |_ **TAX_DETAILS**	-	-	-	-	2005
1	| | | | | | | | | | | | | | |_ SEQUENCE	-	-	-	-	-
0..1	| | | | | | | | | | | | | | |_ **CALCULATION_SEQUENCE**	1	**dtCOUNT**	-	-	2005fd
0..1	| | | | | | | | | | | | | | |_ **TAX_CATEGORY**	-	**dtSTRING**	80	-	2005
0..1	| | | | | | | | | | | | | | |_ **TAX_TYPE**	vat	**dtSTRING**	250	-	2005
0..1	| | | | | | | | | | | | | | |_ **TAX**	-	**dtNUMBER**	-	-	-
0..1	| | | | | | | | | | | | | | |_ **EXEMPTION_REASON**	-	**dtMLSTRING**	250	Yes	2005
0..1	| | | | | | | | | | | | | | |_ **JURISDICTION**	-	**dtMLSTRING**	250	Yes	2005
0..1	| | | | | | | | | | | | |_ **TAX**	-	**dtNUMBER**	-	-	-
0..1	| | | | | | | | | | | | |_ **PRICE_FACTOR**	1	**dtNUMBER**	-	-	2005
0..1	| | | | | | | | | | | | |_ **LOWER_BOUND**	-	**dtNUMBER**	-	-	-
0..1	| | | | | | | | | | | | |_ CHOICE	-	-	-	-	-
0..*	| | | | | | | | | | | | | |_ **TERRITORY**	-	**dtCOUNTRIES**	-	-	1.2_fd
0..1	| | | | | | | | | | | | | |_ **AREA_REFS**	-	-	-	-	2005fd
1	| | | | | | | | | | | | | | |_ SEQUENCE	-	-	-	-	-
1..*	| | | | | | | | | | | | | | | |_ **AREA_IDREF**	-	**dtSTRING**	60	-	2005fd
0..1	| | | | | | | | | | | | |_ **PRICE_BASE**	-	-	-	-	2005fd
1	| | | | | | | | | | | | | |_ SEQUENCE	-	-	-	-	-
1	| | | | | | | | | | | | | | |_ **PRICE_UNIT**	-	**dtPUNIT**	-	-	1.2_fd
0..1	| | | | | | | | | | | | | | |_ **PRICE_UNIT_FACTOR**	1	**dtFLOAT**	-	-	2005
0..*	| | | | | | | | | | | | |_ **PRICE_FLAG**	-	**dtBOOLEAN**	-	-	-
0..1	| | | | | | | | | | | | |_ **LEADTIME**	-	**dtFLOAT**	-	-	2005fd
0..1	| | | | | | | | |_ **MIME_INFO**	-	-	-	-	-
1	| | | | | | | | | |_ SEQUENCE	-	-	-	-	-
1..*	| | | | | | | | | | |_ **MIME**	-	-	-	-	-
1	| | | | | | | | | | | |_ SEQUENCE	-	-	-	-	-
0..1	| | | | | | | | | | | | |_ **MIME_TYPE**	-	**dtSTRING**	100	-	2005.2
1	| | | | | | | | | | | | |_ **MIME_SOURCE**	-	**dtMLSTRING**	255	Yes	-
0..1	| | | | | | | | | | | | |_ **MIME_DESCR**	-	**dtMLSTRING**	250	Yes	-
0..1	| | | | | | | | | | | | |_ **MIME_ALT**	-	**dtMLSTRING**	80	Yes	2005fd
0..1	| | | | | | | | | | | | |_ **MIME_PURPOSE**	-	**dtSTRING**	20	-	2005fd
0..1	| | | | | | | | | | | | |_ **MIME_ORDER**	-	**dtINTEGER**	-	-	-
0..1	| | | | | | | | |_ **USER_DEFINED_EXTENSIONS**	-	**udxPRODUCT**	-	-	-
0..*	| | | | | | | | |_ **ARTICLE_REFERENCE**	-	-	-	-	-
1	| | | | | | | | | |_ SEQUENCE	-	-	-	-	-
1	| | | | | | | | | | |_ **ART_ID_TO**	-	**dtSTRING**	80	-	-
0..1	| | | | | | | | | | |_ **SUPPLIER_IDREF**	-	**dtSTRING**	250	-	2005fd
0..1	| | | | | | | | | | |_ **CATALOG_ID**	-	**dtSTRING**	20	-	-
0..1	| | | | | | | | | | |_ **CATALOG_VERSION**	-	**dtSTRING**	7	-	1.2_fd

Copyright © 2022 BME e.V. - BMEcat® Version 2005.2
Copyright © 2010-2021 BME e.V. - BMEcat® Version 2005.1
Copyright © 2005-2009 BME e.V. - BMEcat® Version 2005
Copyright © 1998–2004 Fraunhofer IAO, Stuttgart; Universität Essen BLI - BMEcat® Version 1.2

Amount	Element name	Default value	Data type	Field length	Lang. specific	l.chg. in ver.
0..1	| | | | | | | | | | |_ **REFERENCE_DESCR**	-	**dtMLSTRING**	250	Yes	2005fd
0..1	| | | | | | | | | |_ **ARTICLE_CONTACTS**	-	-	-	-	-
1	| | | | | | | | | |_ SEQUENCE	-	-	-	-	-
1	| | | | | | | | | | |_ **PARTY_IDREF**	-	**dtSTRING**	250	-	2005fd
1..*	| | | | | | | | | | |_ **CONTACT_IDREF**	-	**dtSTRING**	60	-	2005
0..1	| | | | | | | | |_ **ARTICLE_LOGISTIC_DETAILS**	-	-	-	-	-
1	| | | | | | | | | |_ SEQUENCE	-	-	-	-	-
0..*	| | | | | | | | | | |_ **CUSTOMS_TARIFF_NUMBER**	-	-	-	-	2005fd
1	| | | | | | | | | | | |_ SEQUENCE	-	-	-	-	-
1	| | | | | | | | | | | | |_ **CUSTOMS_NUMBER**	-	**dtSTRING**	60	-	2005fd
0..1	| | | | | | | | | | | | |_ CHOICE	-	-	-	-	-
0..*	| | | | | | | | | | | | | |_ **TERRITORY**	-	**dtCOUNTRIES**	-	-	1.2_fd
0..1	| | | | | | | | | | | | | |_ **AREA_REFS**	-	-	-	-	2005fd
1	| | | | | | | | | | | | | | |_ SEQUENCE	-	-	-	-	-
1..*	| | | | | | | | | | | | | | | |_ **AREA_IDREF**	-	**dtSTRING**	60	-	2005fd
0..1	| | | | | | | | | |_ **STATISTICS_FACTOR**	-	**dtNUMBER**	-	-	2005
0..*	| | | | | | | | | |_ **COUNTRY_OF_ORIGIN**	-	**dtCOUNTRIES**	-	-	2005fd
0..1	| | | | | | | | | |_ **PRODUCT_DIMENSIONS**	-	-	-	-	2005fd
1	| | | | | | | | | | |_ SEQUENCE	-	-	-	-	-
0..1	| | | | | | | | | | | |_ **VOLUME**	-	**dtNUMBER**	-	-	2005fd
0..1	| | | | | | | | | | | |_ **WEIGHT**	-	**dtNUMBER**	-	-	2005fd
0..1	| | | | | | | | | | | |_ **LENGTH**	-	**dtNUMBER**	-	-	2005fd
0..1	| | | | | | | | | | | |_ **WIDTH**	-	**dtNUMBER**	-	-	2005fd
0..1	| | | | | | | | | | | |_ **DEPTH**	-	**dtNUMBER**	-	-	2005fd
0..*	| | | | | | | | | |_ **DELIVERY_TIMES**	-	-	-	-	2005fd
1	| | | | | | | | | | |_ SEQUENCE	-	-	-	-	-
0..1	| | | | | | | | | | | |_ CHOICE	-	-	-	-	-
0..*	| | | | | | | | | | | | |_ **TERRITORY**	-	**dtCOUNTRIES**	-	-	1.2_fd
0..1	| | | | | | | | | | | | |_ **AREA_REFS**	-	-	-	-	2005fd
1	| | | | | | | | | | | | | |_ SEQUENCE	-	-	-	-	-
1..*	| | | | | | | | | | | | | | |_ **AREA_IDREF**	-	**dtSTRING**	60	-	2005fd
1..*	| | | | | | | | | | | |_ **TIME_SPAN**	-	-	-	-	2005
1	| | | | | | | | | | | | |_ SEQUENCE	-	-	-	-	-
1	| | | | | | | | | | | | | |_ **TIME_BASE**	-	**dtSTRING**	20	-	2005
0..1	| | | | | | | | | | | | | |_ **TIME_VALUE_DURATION**	-	**dtSTRING**	20	-	2005
0..1	| | | | | | | | | | | | | |_ **TIME_VALUE_INTERVAL**	1	**dtSTRING**	20	-	2005
0..1	| | | | | | | | | | | | | |_ **TIME_VALUE_START**	-	**dtSTRING**	50	-	2005fd
0..1	| | | | | | | | | | | | | |_ **TIME_VALUE_END**	-	**dtSTRING**	50	-	2005fd
0..*	| | | | | | | | | | | | | |_ **SUB_TIME_SPANS**	-	-	-	-	2005
1	| | | | | | | | | | | | | | |_ SEQUENCE	-	-	-	-	-
1	| | | | | | | | | | | | | | | |_ **TIME_BASE**	-	**dtSTRING**	20	-	2005
0..1	| | | | | | | | | | | | | | | |_ **TIME_VALUE_DURATION**	-	**dtSTRING**	20	-	2005
0..1	| | | | | | | | | | | | | | | |_ **TIME_VALUE_INTERVAL**	1	**dtSTRING**	20	-	2005
0..1	| | | | | | | | | | | | | | | |_ **TIME_VALUE_START**	-	**dtSTRING**	50	-	2005fd
0..1	| | | | | | | | | | | | | | | |_ **TIME_VALUE_END**	-	**dtSTRING**	50	-	2005fd

Copyright © 2022 BME e.V. - BMEcat® Version 2005.2
Copyright © 2010-2021 BME e.V. - BMEcat® Version 2005.1
Copyright © 2005-2009 BME e.V. - BMEcat® Version 2005
Copyright © 1998–2004 Fraunhofer IAO, Stuttgart; Universität Essen BLI - BMEcat® Version 1.2

Amount	Element name	Default value	Data type	Field length	Lang. specific	l.chg. in ver.
0..*	| | | | | | | | | | | | | | | |_ **SUB_TIME_SPANS**	-	-	-	-	2005
0..1	| | | | | | | | | | | | |_ **LEADTIME**	-	**dtFLOAT**	-	-	2005fd
0..*	| | | | | | | | | | |_ **TRANSPORT**	-	-	-	-	2005fd
1	| | | | | | | | | | | |_ SEQUENCE	-	-	-	-	-
1	| | | | | | | | | | | | |_ **INCOTERM**	-	**dtSTRING**	3	-	2005fd
0..1	| | | | | | | | | | | | |_ **LOCATION**	-	**dtSTRING**	250	-	2005fd
0..1	| | | | | | | | | | | | |_ **TRANSPORT_REMARK**	-	**dtMLSTRING**	64000	Yes	2005fd
0..*	| | | | | | | | | | | |_ **MEANS_OF_TRANSPORT**	-	-	-	-	2005fd
1	| | | | | | | | | | | | |_ SEQUENCE	-	-	-	-	-
1	| | | | | | | | | | | | | |_ **MEANS_OF_TRANSPORT_ID**	-	**dtSTRING**	50	-	2005fd
0..1	| | | | | | | | | | | | | |_ **MEANS_OF_TRANSPORT_NAME**	-	**dtMLSTRING**	50	Yes	2005fd
0..*	| | | | | | |_ **ARTICLE_TO_CATALOGGROUP_MAP**in context T_NEW_CATALOG	-	-	-	-	-
1	| | | | | | | |_ SEQUENCE	-	-	-	-	-
1	| | | | | | | | |_ **ART_ID**	-	**dtSTRING**	32	-	-
0..1	| | | | | | | | |_ **SUPPLIER_IDREF**	-	**dtSTRING**	250	-	2005fd
1	| | | | | | | | |_ **CATALOG_GROUP_ID**	-	**dtSTRING**	50	-	-
0..1	| | | | | | | | |_ **ARTICLE_TO_CATALOGGROUP_MAP_ORDER**	-	**dtINTEGER**	-	-	-
1	| | |_ **T_UPDATE_PRICES**	-	-	-	-	2005
1	| | | |_ SEQUENCE	-	-	-	-	-
0..1	| | | | |_ **FORMULAS**	-	-	-	-	2005fd
1	| | | | | |_ SEQUENCE	-	-	-	-	-
1..*	| | | | | | |_ **FORMULA**	-	-	-	-	2005fd
1	| | | | | | | |_ SEQUENCE	-	-	-	-	-
1	| | | | | | | | |_ **FORMULA_ID**	-	**dtSTRING**	60	-	2005fd
0..1	| | | | | | | | |_ **FORMULA_VERSION**	-	-	-	-	2005fd
1	| | | | | | | | | |_ SEQUENCE	-	-	-	-	-
1	| | | | | | | | | | |_ **VERSION**	-	**dtSTRING**	20	-	2005fd
0..1	| | | | | | | | | | |_ **VERSION_DATE**	-	**dtDATETIME**	-	-	2005fd
0..1	| | | | | | | | | | |_ **REVISION**	-	**dtSTRING**	20	-	2005fd
0..1	| | | | | | | | | | |_ **REVISION_DATE**	-	**dtDATETIME**	-	-	2005fd
0..1	| | | | | | | | | | |_ **ORIGINAL_DATE**	-	**dtDATETIME**	-	-	2005fd
0..1	| | | | | | | | |_ **FORMULA_NAME**	-	**dtMLSTRING**	100	Yes	2005fd
0..1	| | | | | | | | |_ **FORMULA_DESCR**	-	**dtMLSTRING**	250	Yes	2005fd
0..1	| | | | | | | | |_ **FORMULA_SOURCE**	-	-	-	-	2005
1	| | | | | | | | | |_ SEQUENCE	-	-	-	-	-
0..1	| | | | | | | | | | |_ **SOURCE_NAME**	-	**dtMLSTRING**	80	Yes	2005
0..1	| | | | | | | | | | |_ **SOURCE_URI**	-	**dtSTRING**	255	-	2005fd
0..1	| | | | | | | | | | |_ **PARTY_IDREF**	-	**dtSTRING**	250	-	2005fd
0..1	| | | | | | | | |_ **MIME_INFO**	-	-	-	-	-
1	| | | | | | | | | |_ SEQUENCE	-	-	-	-	-
1..*	| | | | | | | | | | |_ **MIME**	-	-	-	-	-
1	| | | | | | | | | | | |_ SEQUENCE	-	-	-	-	-
0..1	| | | | | | | | | | | | |_ **MIME_TYPE**	-	**dtSTRING**	100	-	2005.2
1	| | | | | | | | | | | | |_ **MIME_SOURCE**	-	**dtMLSTRING**	255	Yes	-
0..1	| | | | | | | | | | | | |_ **MIME_DESCR**	-	**dtMLSTRING**	250	Yes	-

Copyright © 2022 BME e.V. - BMEcat® Version 2005.2
Copyright © 2010-2021 BME e.V. - BMEcat® Version 2005.1
Copyright © 2005-2009 BME e.V. - BMEcat® Version 2005
Copyright © 1998–2004 Fraunhofer IAO, Stuttgart; Universität Essen BLI - BMEcat® Version 1.2

Amount	Element name	Default value	Data type	Field length	Lang. specific	l.chg. in ver.
0..1	| | | | | | | | | | | | |_ **MIME_ALT**	-	**dtMLSTRING**	80	Yes	2005fd
0..1	| | | | | | | | | | | | |_ **MIME_PURPOSE**	-	**dtSTRING**	20	-	2005fd
0..1	| | | | | | | | | | | | |_ **MIME_ORDER**	-	**dtINTEGER**	-	-	-
0..1	| | | | | | | | | |_ **FORMULA_FUNCTION**	-	-	-	-	2005fd
1	| | | | | | | | | |_ SEQUENCE	-	-	-	-	-
1..*	| | | | | | | | | | |_ **TERM**	-	-	-	-	2005fd
1	| | | | | | | | | | | |_ SEQUENCE	-	-	-	-	-
1	| | | | | | | | | | | | |_ **TERM_ID**	-	**dtSTRING**	20	-	2005fd
0..1	| | | | | | | | | | | | |_ **TERM_CONDITION**	-	**dtSTRING**	3000	-	2005fd
1	| | | | | | | | | | | | |_ **TERM_EXPRESSION**	-	**dtSTRING**	3000	-	2005fd
1	| | | | | | | | | |_ **PARAMETER_DEFINITIONS**	-	-	-	-	2005fd
1	| | | | | | | | | |_ SEQUENCE	-	-	-	-	-
1..*	| | | | | | | | | | |_ **PARAMETER_DEFINITION**	-	-	-	-	2005
1	| | | | | | | | | | | |_ SEQUENCE	-	-	-	-	-
1	| | | | | | | | | | | | |_ **PARAMETER_SYMBOL**	-	**dtSTRING**	60	-	2005fd
1	| | | | | | | | | | | | |_ CHOICE	-	-	-	-	-
1	| | | | | | | | | | | | | |_ **PARAMETER_BASICS**	-	-	-	-	2005fd
1	| | | | | | | | | | | | | |_ SEQUENCE	-	-	-	-	-
1	| | | | | | | | | | | | | | |_ **PARAMETER_NAME**	-	**dtMLSTRING**	100	Yes	2005fd
0..1	| | | | | | | | | | | | | | |_ **PARAMETER_DESCR**	-	**dtMLSTRING**	250	Yes	2005fd
0..1	| | | | | | | | | | | | | | |_ **PARAMETER_UNIT**	-	**dtMLSTRING**	60	Yes	2005
1	| | | | | | | | | | | | | |_ **FREF**	-	-	-	-	2005
1	| | | | | | | | | | | | | |_ SEQUENCE	-	-	-	-	-
1	| | | | | | | | | | | | | | |_ **REFERENCE_FEATURE_SYSTEM_NAME**	-	**dtSTRING**	80	-	-
1	| | | | | | | | | | | | | | |_ **FT_IDREF**	-	**dtSTRING**	60	-	-
0..1	| | | | | | | | | | | | |_ **PARAMETER_ORIGIN**	-	**dtMLSTRING**	6000	Yes	2005fd
0..1	| | | | | | | | | | | | |_ **PARAMETER_DEFAULT_VALUE**	-	**dtSTRING**	250	-	2005fd
0..1	| | | | | | | | | | | | |_ **PARAMETER_MEANING**	-	**dtSTRING**	20	-	2005fd
0..1	| | | | | | | | | | | | |_ **PARAMETER_ORDER**	-	**dtINTEGER**	-	-	2005fd
1	| | | | |_ CHOICE	-	-	-	-	-
1..*	| | | | | |_ **PRODUCT** in context T_UPDATE_PRICES	-	-	-	-	2005fd
1	| | | | | | |_ SEQUENCE	-	-	-	-	-
1	| | | | | | | |_ **SUPPLIER_PID**	-	**dtSTRING**	32	-	2005
0..1	| | | | | | | |_ **SUPPLIER_IDREF**	-	**dtSTRING**	250	-	2005fd
1..*	| | | | | | | |_ **PRODUCT_PRICE_DETAILS**	-	-	-	-	2005fd
1	| | | | | | | | |_ SEQUENCE	-	-	-	-	-
0..1	| | | | | | | | | |_ CHOICE	-	-	-	-	-
0..1	| | | | | | | | | | |_ SEQUENCE	-	-	-	-	-
0..1	| | | | | | | | | | | |_ **VALID_START_DATE**	-	**dtDATETIME**	-	-	2005fd
0..1	| | | | | | | | | | | |_ **VALID_END_DATE**	-	**dtDATETIME**	-	-	2005fd
0..2	| | | | | | | | | | | |_ **DATETIME** in the context of ARTICLE_PRICE_DETAILS	-	-	-	-	-
1	| | | | | | | | | | | | |_ SEQUENCE	-	-	-	-	-
1	| | | | | | | | | | | | | |_ **DATE**	-	**dtDATETYPE**	-	-	-
0..1	| | | | | | | | | | | | | |_ **TIME**	-	**dtTIMETYPE**	-	-	-
0..1	| | | | | | | | | | | | | |_ **TIMEZONE**	-	**dtTIMEZONETYPE**	-	-	-

Copyright © 2022 BME e.V. - BMEcat® Version 2005.2
Copyright © 2010-2021 BME e.V. - BMEcat® Version 2005.1
Copyright © 2005-2009 BME e.V. - BMEcat® Version 2005
Copyright © 1998–2004 Fraunhofer IAO, Stuttgart; Universität Essen BLI - BMEcat® Version 1.2

Amount	Element name	Default value	Data type	Field length	Lang. specific	l.chg. in ver.
0..1	|_ **DAILY_PRICE**	-	**dtBOOLEAN**	-	-	-
1..*	|_ **PRODUCT_PRICE**	-	-	-	-	2005
1	|_ SEQUENCE	-	-	-	-	-
0..1	|_ CHOICE	-	-	-	-	-
0..1	|_ **PRICE_AMOUNT**	-	**dtNUMBER**	-	-	-
0..1	|_ **PRICE_FORMULA**	-	-	-	-	2005fd
1	|_ SEQUENCE	-	-	-	-	-
1	|_ **FORMULA_IDREF**	-	**dtSTRING**	60	-	2005fd
0..1	|_ **PARAMETERS**	-	-	-	-	2005fd
1	|_ SEQUENCE	-	-	-	-	-
1..*	|_ **PARAMETER**	-	-	-	-	2005fd
1	|_ SEQUENCE	-	-	-	-	-
1	|_ **PARAMETER_SYMBOLREF**	-	**dtSTRING**	60	-	2005fd
1	|_ **PARAMETER_VALUE**	-	**dtSTRING**	250	-	2005fd
0..1	|_ **PRICE_CURRENCY**	-	**dtCURRENCIES**	-	-	2005.2
0..1	|_ CHOICE	-	-	-	-	-
0..*	|_ **TAX_DETAILS**	-	-	-	-	2005
1	|_ SEQUENCE	-	-	-	-	-
0..1	|_ **CALCULATION_SEQUENCE**	1	**dtCOUNT**	-	-	2005fd
0..1	|_ **TAX_CATEGORY**	-	**dtSTRING**	80	-	2005
0..1	|_ **TAX_TYPE**	vat	**dtSTRING**	250	-	2005
0..1	|_ **TAX**	-	**dtNUMBER**	-	-	-
0..1	|_ **EXEMPTION_REASON**	-	**dtMLSTRING**	250	Yes	2005
0..1	|_ **JURISDICTION**	-	**dtMLSTRING**	250	Yes	2005
0..1	|_ **TAX**	-	**dtNUMBER**	-	-	-
0..1	|_ **PRICE_FACTOR**	1	**dtNUMBER**	-	-	2005
0..1	|_ **LOWER_BOUND**	-	**dtNUMBER**	-	-	-
0..1	|_ CHOICE	-	-	-	-	-
0..*	|_ **TERRITORY**	-	**dtCOUNTRIES**	-	-	1.2_fd
0..1	|_ **AREA_REFS**	-	-	-	-	2005fd
1	|_ SEQUENCE	-	-	-	-	-
1..*	|_ **AREA_IDREF**	-	**dtSTRING**	60	-	2005fd
0..1	|_ **PRICE_BASE**	-	-	-	-	2005fd
1	|_ SEQUENCE	-	-	-	-	-
1	|_ **PRICE_UNIT**	-	**dtPUNIT**	-	-	1.2_fd
0..1	|_ **PRICE_UNIT_FACTOR**	1	**dtFLOAT**	-	-	2005
0..*	|_ **PRICE_FLAG**	-	**dtBOOLEAN**	-	-	-
0..1	|_ **USER_DEFINED_EXTENSIONS**	-	**udxPRODUCT**	-	-	-
1..*	|_ **ARTICLE** in context T_UPDATE_PRICES	-	-	-	-	-
1	|_ SEQUENCE	-	-	-	-	-
1	|_ **SUPPLIER_AID**	-	**dtSTRING**	32	-	-
0..1	|_ **SUPPLIER_IDREF**	-	**dtSTRING**	250	-	2005fd
1..*	|_ **ARTICLE_PRICE_DETAILS**	-	-	-	-	-
1	|_ SEQUENCE	-	-	-	-	-
1	|_ CHOICE	-	-	-	-	-

Copyright © 2022 BME e.V. - BMEcat® Version 2005.2
Copyright © 2010-2021 BME e.V. - BMEcat® Version 2005.1
Copyright © 2005-2009 BME e.V. - BMEcat® Version 2005
Copyright © 1998–2004 Fraunhofer IAO, Stuttgart; Universität Essen BLI - BMEcat® Version 1.2

Amount	Element name	Default value	Data type	Field length	Lang. specific	l.chg. in ver.
0..1	| | | | | | | | | | |_ SEQUENCE	-	-	-	-	-
0..1	| | | | | | | | | | | |_ **VALID_START_DATE**	-	**dtDATETIME**	-	-	2005fd
0..1	| | | | | | | | | | | |_ **VALID_END_DATE**	-	**dtDATETIME**	-	-	2005fd
0..2	| | | | | | | | | | |_ **DATETIME** in the context of CATALOG	-	-	-	-	-
1	| | | | | | | | | | | |_ SEQUENCE	-	-	-	-	-
1	| | | | | | | | | | | | |_ **DATE**	-	**dtDATETYPE**	-	-	-
0..1	| | | | | | | | | | | | |_ **TIME**	-	**dtTIMETYPE**	-	-	-
0..1	| | | | | | | | | | | | |_ **TIMEZONE**	-	**dtTIMEZONETYPE**	-	-	-
0..1	| | | | | | | | | | |_ **DAILY_PRICE**	-	**dtBOOLEAN**	-	-	-
1..*	| | | | | | | | | | |_ **ARTICLE_PRICE**	-	-	-	-	-
1	| | | | | | | | | | | |_ SEQUENCE	-	-	-	-	-
0..1	| | | | | | | | | | | | |_ CHOICE	-	-	-	-	-
0..1	| | | | | | | | | | | | |_ **PRICE_AMOUNT**	-	**dtNUMBER**	-	-	-
0..1	| | | | | | | | | | | | |_ **PRICE_FORMULA**	-	-	-	-	2005fd
1	| | | | | | | | | | | | | |_ SEQUENCE	-	-	-	-	-
1	| | | | | | | | | | | | | | |_ **FORMULA_IDREF**	-	**dtSTRING**	60	-	2005fd
0..1	| | | | | | | | | | | | | | |_ **PARAMETERS**	-	-	-	-	2005fd
1	| | | | | | | | | | | | | | | |_ SEQUENCE	-	-	-	-	-
1..*	| | | | | | | | | | | | | | | | |_ **PARAMETER**	-	-	-	-	2005fd
1	| | | | | | | | | | | | | | | | | |_ SEQUENCE	-	-	-	-	-
1	| | | | | | | | | | | | | | | | | | |_ **PARAMETER_SYMBOLREF**	-	**dtSTRING**	60	-	2005fd
1	| | | | | | | | | | | | | | | | | | |_ **PARAMETER_VALUE**	-	**dtSTRING**	250	-	2005fd
0..1	| | | | | | | | | | |_ **PRICE_CURRENCY**	-	**dtCURRENCIES**	-	-	2005.2
0..1	| | | | | | | | | | |_ CHOICE	-	-	-	-	-
0..*	| | | | | | | | | | | |_ **TAX_DETAILS**	-	-	-	-	2005
1	| | | | | | | | | | | | |_ SEQUENCE	-	-	-	-	-
0..1	| | | | | | | | | | | | | |_ **CALCULATION_SEQUENCE**	1	**dtCOUNT**	-	-	2005fd
0..1	| | | | | | | | | | | | | |_ **TAX_CATEGORY**	-	**dtSTRING**	80	-	2005
0..1	| | | | | | | | | | | | | |_ **TAX_TYPE**	vat	**dtSTRING**	250	-	2005
0..1	| | | | | | | | | | | | | |_ **TAX**	-	**dtNUMBER**	-	-	-
0..1	| | | | | | | | | | | | | |_ **EXEMPTION_REASON**	-	**dtMLSTRING**	250	Yes	2005
0..1	| | | | | | | | | | | | | |_ **JURISDICTION**	-	**dtMLSTRING**	250	Yes	2005
0..1	| | | | | | | | | | | |_ **TAX**	-	**dtNUMBER**	-	-	-
0..1	| | | | | | | | | | | |_ **PRICE_FACTOR**	1	**dtNUMBER**	-	-	2005
0..1	| | | | | | | | | | | |_ **LOWER_BOUND**	-	**dtNUMBER**	-	-	-
0..1	| | | | | | | | | | | |_ CHOICE	-	-	-	-	-
0..*	| | | | | | | | | | | | |_ **TERRITORY**	-	**dtCOUNTRIES**	-	-	1.2_fd
0..1	| | | | | | | | | | | | |_ **AREA_REFS**	-	-	-	-	2005fd
1	| | | | | | | | | | | | | |_ SEQUENCE	-	-	-	-	-
1..*	| | | | | | | | | | | | | | |_ **AREA_IDREF**	-	**dtSTRING**	60	-	2005fd
0..1	| | | | | | | | | | | |_ **PRICE_BASE**	-	-	-	-	2005fd
1	| | | | | | | | | | | | |_ SEQUENCE	-	-	-	-	-
1	| | | | | | | | | | | | | |_ **PRICE_UNIT**	-	**dtPUNIT**	-	-	1.2_fd
0..1	| | | | | | | | | | | | | |_ **PRICE_UNIT_FACTOR**	1	**dtFLOAT**	-	-	2005
0..*	| | | | | | | | | | | |_ **PRICE_FLAG**	-	**dtBOOLEAN**	-	-	-

Copyright © 2022 BME e.V. - BMEcat® Version 2005.2
Copyright © 2010-2021 BME e.V. - BMEcat® Version 2005.1
Copyright © 2005-2009 BME e.V. - BMEcat® Version 2005
Copyright © 1998–2004 Fraunhofer IAO, Stuttgart; Universität Essen BLI - BMEcat® Version 1.2

Amount	Element name	Default value	Data type	Field length	Lang. specific	l.chg. in ver.
0..1	| | | | | | | | | | |_ **LEADTIME**	-	**dtFLOAT**	-	-	2005fd
0..1	| | | | | | | |_ **USER_DEFINED_EXTENSIONS**	-	**udxPRODUCT**	-	-	-

Copyright © 2022 BME e.V. - BMEcat® Version 2005.2
Copyright © 2010-2021 BME e.V. - BMEcat® Version 2005.1
Copyright © 2005-2009 BME e.V. - BMEcat® Version 2005
Copyright © 1998–2004 Fraunhofer IAO, Stuttgart; Universität Essen BLI - BMEcat® Version 1.2

Overview of elements - alphabetical order

Element name	Default value	Data type	Field length	Lang. specific	l.chg. in ver.
ACADEMIC_TITLE	-	**dtMLSTRING**	50	Yes	2005fd
ACCOUNTING_INFO	-	-	-	-	2005fd
ADDRESS	-	-	-	-	2005
ADDRESS in context BUYER	-	-	-	-	2005
ADDRESS in context SUPPLIER	-	-	-	-	2005
ADDRESS_REMARKS	-	**dtMLSTRING**	250	Yes	-
AGREEMENT	-	-	-	-	2005fd
AGREEMENT_DESCR	-	**dtSTRING**	250	-	2005fd
AGREEMENT_END_DATE	-	**dtDATETIME**	-	-	2005fd
AGREEMENT_ID	-	**dtSTRING**	50	-	-
AGREEMENT_IDREF	-	**dtSTRING**	50	-	2005fd
AGREEMENT_LINE_ID	-	**dtSTRING**	50	-	2005fd
AGREEMENT_LINE_IDREF	-	**dtSTRING**	50	-	2005fd
AGREEMENT_REF	-	-	-	-	2005fd
AGREEMENT_START_DATE	-	**dtDATETIME**	-	-	2005fd
ALLOWED_VALUE	-	-	-	-	2005fd
ALLOWED_VALUES	-	-	-	-	-
ALLOWED_VALUE_DESCR	-	**dtMLSTRING**	250	Yes	-
ALLOWED_VALUE_ID	-	**dtSTRING**	60	-	-
ALLOWED_VALUE_IDREF	-	**dtSTRING**	60	-	-
ALLOWED_VALUE_NAME	-	**dtMLSTRING**	80	Yes	2005fd
ALLOWED_VALUE_SHORTNAME	-	**dtMLSTRING**	80	Yes	2005fd
ALLOWED_VALUE_SOURCE	-	-	-	-	2005
ALLOWED_VALUE_SYNONYMS	-	-	-	-	2005fd
ALLOWED_VALUE_VERSION	-	-	-	-	2005fd
AREA	-	-	-	-	2005fd
AREAS	-	-	-	-	2005fd
AREA_DESCR	-	**dtMLSTRING**	250	Yes	2005fd

Copyright © 2022 BME e.V. - BMEcat® Version 2005.2
Copyright © 2010-2021 BME e.V. - BMEcat® Version 2005.1
Copyright © 2005-2009 BME e.V. - BMEcat® Version 2005
Copyright © 1998–2004 Fraunhofer IAO, Stuttgart; Universität Essen BLI - BMEcat® Version 1.2

Element name	Default value	Data type	Field length	Lang. specific	l.chg. in ver.
AREA_ID	-	**dtSTRING**	60	-	2005fd
AREA_IDREF	-	**dtSTRING**	60	-	2005fd
AREA_LEGAL_INFO	-	-	-	-	2005
AREA_NAME	-	**dtMLSTRING**	100	Yes	2005fd
AREA_REFS	-	-	-	-	2005fd
ARTICLE in context T_NEW_CATALOG	-	-	-	-	-
ARTICLE in context T_UPDATE_PRICES	-	-	-	-	-
ARTICLE in context T_UPDATE_PRODUCTS	-	-	-	-	-
ARTICLE_CATEGORY	-	**dtSTRING**	20	-	-
ARTICLE_CONTACTS	-	-	-	-	-
ARTICLE_DETAILS	-	-	-	-	-
ARTICLE_FEATURES	-	-	-	-	-
ARTICLE_LOGISTIC_DETAILS	-	-	-	-	-
ARTICLE_ORDER	-	**dtINTEGER**	-	-	-
ARTICLE_ORDER_DETAILS	-	-	-	-	-
ARTICLE_PRICE	-	-	-	-	-
ARTICLE_PRICE_DETAILS	-	-	-	-	-
ARTICLE_REFERENCE	-	-	-	-	-
ARTICLE_STATUS	-	**dtMLSTRING**	250	Yes	-
ARTICLE_TO_CATALOGGROUP_MAPin context T_NEW_CATALOG	-	-	-	-	-
ARTICLE_TO_CATALOGGROUP_MAPin context T_NEW_CATALOG	-	-	-	-	-
ARTICLE_TO_CATALOGGROUP_MAP_ORDER	-	**dtINTEGER**	-	-	-
ARTICLE_TYPE	-	**dtSTRING**	50	-	-
ART_ID	-	**dtSTRING**	32	-	-
ART_ID_TO	-	**dtSTRING**	80	-	-
AUTHENTIFICATION	-	-	-	-	2005fd
BALANCEDTREE	-	**dtBOOLEAN**	-	-	2005fd
BMECAT	-	-	-	-	-
BOXNO	-	**dtMLSTRING**	20	Yes	-
BUYER	-	-	-	-	-

Copyright © 2022 BME e.V. - BMEcat® Version 2005.2
Copyright © 2010-2021 BME e.V. - BMEcat® Version 2005.1
Copyright © 2005-2009 BME e.V. - BMEcat® Version 2005
Copyright © 1998–2004 Fraunhofer IAO, Stuttgart; Universität Essen BLI - BMEcat® Version 1.2

Element name	Default value	Data type	Field length	Lang. specific	l.chg. in ver.
BUYER_AID	-	**dtSTRING**	50	-	-
BUYER_ID	-	**dtSTRING**	250	-	2005fd
BUYER_IDREF	-	**dtSTRING**	250	-	2005fd
BUYER_NAME	-	**dtSTRING**	50	-	-
BUYER_PID	-	**dtSTRING**	50	-	2005fd
CALCULATION_SEQUENCE	1	**dtCOUNT**	-	-	2005
CATALOG	-	-	-	-	2005.1
CATALOG_GROUP_ID	-	**dtSTRING**	50	-	-
CATALOG_GROUP_SYSTEM	-	-	-	-	-
CATALOG_ID	-	**dtSTRING**	20	-	-
CATALOG_NAME	-	**dtMLSTRING**	100	Yes	-
CATALOG_STRUCTURE	-	-	-	-	-
CATALOG_VERSION	-	**dtSTRING**	7	-	1.2_fd
CITY	-	**dtMLSTRING**	50	Yes	-
CLASSIFICATION_GROUP	-	-	-	-	2005
CLASSIFICATION_GROUPS	-	-	-	-	-
CLASSIFICATION_GROUP_ARTICLEORDER	-	**dtINTEGER**	-	-	-
CLASSIFICATION_GROUP_CONTACTS	-	-	-	-	2005
CLASSIFICATION_GROUP_DESCR	-	**dtMLSTRING**	16000	Yes	2005fd
CLASSIFICATION_GROUP_FEATURE_TEMPLATE	-	-	-	-	2005
CLASSIFICATION_GROUP_FEATURE_TEMPLATES	-	-	-	-	-
CLASSIFICATION_GROUP_ID	-	**dtSTRING**	60	-	-
CLASSIFICATION_GROUP_ID2	-	**dtSTRING**	60	-	2005fd
CLASSIFICATION_GROUP_NAME	-	**dtMLSTRING**	250	Yes	2005fd
CLASSIFICATION_GROUP_NOTE	-	**dtMLSTRING**	16000	Yes	2005fd
CLASSIFICATION_GROUP_ORDER	-	**dtINTEGER**	-	-	2005fd
CLASSIFICATION_GROUP_PARENT_ID	-	**dtSTRING**	60	-	-
CLASSIFICATION_GROUP_REMARK	-	**dtMLSTRING**	16000	Yes	2005fd
CLASSIFICATION_GROUP_SHORTNAME	-	**dtMLSTRING**	80	Yes	2005fd
CLASSIFICATION_GROUP_SOURCE	-	-	-	-	2005

Copyright © 2022 BME e.V. - BMEcat® Version 2005.2
Copyright © 2010-2021 BME e.V. - BMEcat® Version 2005.1
Copyright © 2005-2009 BME e.V. - BMEcat® Version 2005
Copyright © 1998–2004 Fraunhofer IAO, Stuttgart; Universität Essen BLI - BMEcat® Version 1.2

Element name	Default value	Data type	Field length	Lang. specific	l.chg. in ver.
CLASSIFICATION_GROUP_SYNONYMS	-	-	-	-	-
CLASSIFICATION_GROUP_UDX	-	**udxCLASSGROUP**	-	-	2005fd
CLASSIFICATION_GROUP_VERSION	-	-	-	-	2005fd
CLASSIFICATION_SYSTEM	-	-	-	-	2005
CLASSIFICATION_SYSTEM_DESCR	-	**dtMLSTRING**	16000	Yes	2005fd
CLASSIFICATION_SYSTEM_FEATURE_TEMPLATE	-	-	-	-	2005
CLASSIFICATION_SYSTEM_FEATURE_TEMPLATES	-	-	-	-	-
CLASSIFICATION_SYSTEM_FULLNAME	-	**dtMLSTRING**	80	Yes	2005fd
CLASSIFICATION_SYSTEM_LEVELS	-	**dtINTEGER**	-	-	-
CLASSIFICATION_SYSTEM_LEVEL_NAME	-	**dtMLSTRING**	80	Yes	2005
CLASSIFICATION_SYSTEM_LEVEL_NAMES	-	-	-	-	-
CLASSIFICATION_SYSTEM_NAME	-	**dtSTRING**	80	-	2005fd
CLASSIFICATION_SYSTEM_PARTY_IDREF	-	**dtSTRING**	250	-	2005fd
CLASSIFICATION_SYSTEM_TYPE	-	-	-	-	2005fd
CLASSIFICATION_SYSTEM_VERSION	-	**dtSTRING**	20	-	-
CLASSIFICATION_SYSTEM_VERSION_DETAILS	-	-	-	-	2005fd
CONFIG_CODE	-	**dtSTRING**	50	-	2005fd
CONFIG_FEATURE	-	-	-	-	2005
CONFIG_FORMULA	-	-	-	-	2005fd
CONFIG_FORMULAS	-	-	-	-	2005fd
CONFIG_INFO	-	-	-	-	2005fd
CONFIG_PARTS	-	-	-	-	2005fd
CONFIG_RULES	-	-	-	-	-
CONFIG_STEP	-	-	-	-	2005fd
CONTACT	-	**dtMLSTRING**	50	Yes	-
CONTACT_DESCR	-	**dtMLSTRING**	250	Yes	2005fd
CONTACT_DETAILS	-	-	-	-	2005
CONTACT_ID	-	**dtSTRING**	60	-	2005
CONTACT_IDREF	-	**dtSTRING**	60	-	2005
CONTACT_NAME	-	**dtMLSTRING**	50	Yes	2005fd

Copyright © 2022 BME e.V. - BMEcat® Version 2005.2
Copyright © 2010-2021 BME e.V. - BMEcat® Version 2005.1
Copyright © 2005-2009 BME e.V. - BMEcat® Version 2005
Copyright © 1998–2004 Fraunhofer IAO, Stuttgart; Universität Essen BLI - BMEcat® Version 1.2

Element name	Default value	Data type	Field length	Lang. specific	l.chg. in ver.
CONTACT_ROLE	-	**dtMLSTRING**	50	Yes	2005fd
CONTENT_UNIT	-	**dtPUNIT**	-	-	-
COST_ACCOUNT	-	**dtSTRING**	64	-	2005fd
COST_CATEGORY_ID	-	**dtSTRING**	64	-	2005fd
COST_TYPE	-	**dtSTRING**	64	-	2005fd
COUNTRY	-	**dtMLSTRING**	50	Yes	-
COUNTRY_CODED	-	**dtCOUNTRIES**	-	-	2005fd
COUNTRY_OF_ORIGIN	-	**dtCOUNTRIES**	-	-	2005fd
CURRENCY	-	**dtCURRENCIES**	-	-	-
CUSTOMS_NUMBER	-	**dtSTRING**	60	-	2005fd
CUSTOMS_TARIFF_NUMBER	-	-	-	-	2005fd
DAILY_PRICE	-	**dtBOOLEAN**	-	-	-
DATE	-	**dtDATETYPE**	-	-	-
DATETIME in the context of AGREEMENT	-	-	-	-	-
DATETIME in the context of CATALOG	-	-	-	-	-
DATETIME in the context of PRODUCT_PRICE_DETAILS	-	-	-	-	-
DATETIME in the context of ARTICLE_PRICE_DETAILS	-	-	-	-	-
DEFAULT_FLAG	-	**dtBOOLEAN**	-	-	2005fd
DELIVERY_TIME	-	**dtNUMBER**	-	-	1.2_fd
DELIVERY_TIMES	-	-	-	-	2005fd
DEPARTMENT	-	**dtMLSTRING**	50	Yes	2005fd
DEPTH	-	**dtNUMBER**	-	-	2005fd
DESCRIPTION_LONG	-	**dtMLSTRING**	64000	Yes	1.2_fd
DESCRIPTION_SHORT	-	**dtMLSTRING**	150	Yes	-
DOCUMENT_CREATOR_IDREF	-	**dtSTRING**	250	-	2005
EAN	-	**dtSTRING**	14	-	-
EMAIL	-	**dtSTRING**	255	-	2005fd
EMAILS	-	-	-	-	2005fd
ENDVALUE	-	**dtNUMBER**	-	-	2005fd
ERP_GROUP_BUYER	-	**dtSTRING**	10	-	-

Copyright © 2022 BME e.V. - BMEcat® Version 2005.2
Copyright © 2010-2021 BME e.V. - BMEcat® Version 2005.1
Copyright © 2005-2009 BME e.V. - BMEcat® Version 2005
Copyright © 1998–2004 Fraunhofer IAO, Stuttgart; Universität Essen BLI - BMEcat® Version 1.2

Element name	Default value	Data type	Field length	Lang. specific	l.chg. in ver.
ERP_GROUP_SUPPLIER	-	**dtSTRING**	10	-	-
EXEMPTION_REASON	-	**dtMLSTRING**	250	Yes	2005
FAX	-	**dtMLSTRING**	50	Yes	-
FDESCR	-	**dtMLSTRING**	250	Yes	1.2_fd
FEATURE	-	-	-	-	2005.2
FEATURE_CONTENT	-	-	-	-	2005
FEATURE_GROUP	-	-	-	-	2005.1
FEATURE_GROUP_DESCRIPTION	-	**dtMLSTRING**	-	-	2005.1
FEATURE_GROUP_NAME	-	**dtMLSTRING**	-	-	2005.1
FEATURE_SYSTEM	-	-	-	-	-
FID	-	**dtSTRING**	-	-	2005.1
FIRST_NAME	-	**dtMLSTRING**	50	Yes	-
FNAME	-	**dtMLSTRING**	80	Yes	2005.2
FORDER	-	**dtINTEGER**	-	-	-
FORMULA	-	-	-	-	2005fd
FORMULAS	-	-	-	-	2005fd
FORMULA_DESCR	-	**dtMLSTRING**	250	Yes	2005fd
FORMULA_FUNCTION	-	-	-	-	2005fd
FORMULA_ID	-	**dtSTRING**	60	-	2005fd
FORMULA_IDREF	-	**dtSTRING**	60	-	2005fd
FORMULA_NAME	-	**dtMLSTRING**	100	Yes	2005fd
FORMULA_SOURCE	-	-	-	-	2005
FORMULA_VERSION	-	-	-	-	2005fd
FPARENT_ID	-	**dtSTRING**	-	-	2005.1
FREF	-	-	-	-	2005
FTEMPLATE	-	-	-	-	2005
FT_ALLOWED_VALUES	-	-	-	-	-
FT_DATATYPE	-	**dtSTRING**	20	-	-
FT_DEPENDENCIES	-	-	-	-	2005
FT_DESCR	-	**dtMLSTRING**	16000	Yes	2005fd

Copyright © 2022 BME e.V. - BMEcat® Version 2005.2
Copyright © 2010-2021 BME e.V. - BMEcat® Version 2005.1
Copyright © 2005-2009 BME e.V. - BMEcat® Version 2005
Copyright © 1998–2004 Fraunhofer IAO, Stuttgart; Universität Essen BLI - BMEcat® Version 1.2

Element name	Default value	Data type	Field length	Lang. specific	l.chg. in ver.
FT_FACET	-	**dtSTRING**	20	-	2005fd
FT_FACETS	-	-	-	-	2005fd
FT_GROUP	-	-	-	-	2005fd
FT_GROUPS	-	-	-	-	2005fd
FT_GROUP_DESCR	-	**dtMLSTRING**	250	Yes	2005fd
FT_GROUP_ID	-	**dtSTRING**	60	-	2005fd
FT_GROUP_IDREF	-	**dtSTRING**	60	-	2005
FT_GROUP_NAME	-	**dtMLSTRING**	80	Yes	2005
FT_GROUP_PARENT_ID	-	**dtSTRING**	60	-	2005fd
FT_ID	-	**dtSTRING**	60	-	-
FT_IDREF	-	**dtSTRING**	60	-	-
FT_MANDATORY	-	**dtBOOLEAN**	-	-	-
FT_NAME	-	**dtMLSTRING**	80	Yes	2005fd
FT_NOTE	-	**dtMLSTRING**	16000	Yes	2005fd
FT_ORDER	-	**dtINTEGER**	-	-	-
FT_REMARK	-	**dtMLSTRING**	16000	Yes	2005fd
FT_SHORTNAME	-	**dtMLSTRING**	80	Yes	2005fd
FT_SOURCE	-	-	-	-	2005
FT_SYMBOL	-	**dtMLSTRING**	20	Yes	1.2
FT_SYNONYMS	-	-	-	-	2005fd
FT_UNIT	-	**dtSTRING**	80	-	2005fd
FT_UNIT_IDREF	-	**dtSTRING**	60	-	2005fd
FT_VALENCY	univalent	**dtSTRING**	20	-	2005fd
FT_VALUE	-	-	-	-	2005
FT_VALUES	-	-	-	-	2005
FT_VERSION	-	-	-	-	2005fd
FUNIT	-	**dtSTRING**	20	-	-
FVALUE	-	**dtMLSTRING**	-	Yes	1.2_fd
FVALUE_DETAILS	-	**dtMLSTRING**	250	Yes	1.2_fd
FVALUE_TYPE	-	**dtSTRING**	20	-	2005fd

Copyright © 2022 BME e.V. - BMEcat® Version 2005.2
Copyright © 2010-2021 BME e.V. - BMEcat® Version 2005.1
Copyright © 2005-2009 BME e.V. - BMEcat® Version 2005
Copyright © 1998–2004 Fraunhofer IAO, Stuttgart; Universität Essen BLI - BMEcat® Version 1.2

Element name	Default value	Data type	Field length	Lang. specific	l.chg. in ver.
GENERATION_DATE	-	**dtDATETIME**	-	-	2005fd
GENERATOR_INFO	-	**dtSTRING**	250	-	-
GROUPID_HIERARCHY	-	**dtBOOLEAN**	-	-	2005fd
GROUP_DESCRIPTION	-	**dtMLSTRING**	250	Yes	-
GROUP_ID	-	**dtSTRING**	50	-	-
GROUP_NAME	-	**dtMLSTRING**	50	Yes	-
GROUP_ORDER	-	**dtINTEGER**	-	-	-
GROUP_PRODUCT_ORDER	-	**dtINTEGER**	-	-	2005
GROUP_SYSTEM_DESCRIPTION	-	**dtMLSTRING**	250	Yes	-
GROUP_SYSTEM_ID	-	**dtSTRING**	50	-	-
GROUP_SYSTEM_NAME	-	**dtMLSTRING**	50	Yes	-
HEADER	-	-	-	-	2005
INCOTERM	-	**dtSTRING**	3	-	2005fd
INHERITANCE	-	**dtBOOLEAN**	-	-	2005fd
INTERNATIONAL_AID	-	**dtSTRING**	100	-	-
INTERNATIONAL_PID	-	**dtSTRING**	100	-	2005fd
INTERNATIONAL_RESTRICTIONS	-	**dtSTRING**	250	-	2005fd
INTERVALVALUE	-	**dtNUMBER**	-	-	2005fd
IPP	-	-	-	-	2005fd
IPP_AUTHENTIFICATION_INFO	-	-	-	-	2005fd
IPP_DEFINITION	-	-	-	-	2005fd
IPP_DEFINITIONS	-	-	-	-	2005fd
IPP_DESCR	-	**dtMLSTRING**	250	Yes	2005fd
IPP_ID	-	**dtSTRING**	60	-	2005fd
IPP_IDREF	-	**dtSTRING**	60	-	2005fd
IPP_INBOUND	-	-	-	-	2005fd
IPP_INBOUND_FORMAT	-	**dtSTRING**	50	-	2005fd
IPP_INBOUND_PARAMS	-	-	-	-	2005fd
IPP_LANGUAGES	-	-	-	-	2005fd
IPP_OPERATION	-	-	-	-	2005fd

Copyright © 2022 BME e.V. - BMEcat® Version 2005.2
Copyright © 2010-2021 BME e.V. - BMEcat® Version 2005.1
Copyright © 2005-2009 BME e.V. - BMEcat® Version 2005
Copyright © 1998–2004 Fraunhofer IAO, Stuttgart; Universität Essen BLI - BMEcat® Version 1.2

Element name	Default value	Data type	Field length	Lang. specific	l.chg. in ver.
IPP_OPERATION_DESCR	-	**dtMLSTRING**	250	Yes	2005fd
IPP_OPERATION_ID	-	**dtSTRING**	60	-	2005fd
IPP_OPERATION_IDREF	-	**dtSTRING**	60	-	2005fd
IPP_OPERATION_TYPE	-	**dtSTRING**	20	-	2005fd
IPP_OPERATOR_IDREF	-	**dtSTRING**	250	-	2005fd
IPP_OUTBOUND	-	-	-	-	2005fd
IPP_OUTBOUND_FORMAT	-	**dtSTRING**	50	-	2005fd
IPP_OUTBOUND_PARAMS	-	-	-	-	2005
IPP_PARAM	-	-	-	-	2005fd
IPP_PARAM_DEFINITION	-	-	-	-	2005fd
IPP_PARAM_DESCR	-	**dtMLSTRING**	250	Yes	2005fd
IPP_PARAM_NAME	-	**dtSTRING**	100	-	2005fd
IPP_PARAM_NAMEREF	-	**dtSTRING**	100	-	2005fd
IPP_PARAM_VALUE	-	**dtSTRING**	3000	-	2005fd
IPP_PRICE_CURRENCIES	-	-	-	-	2005fd
IPP_PRICE_TYPES	-	-	-	-	2005fd
IPP_PRODUCTCONFIG_IDREF	-	-	-	-	2005fd
IPP_PRODUCTLIST_IDREF	-	-	-	-	2005fd
IPP_RESPONSE_TIME	-	**dtDURATION**	-	-	2005fd
IPP_SUPPLIER_PID	-	-	-	-	2005fd
IPP_TERRITORIES	-	-	-	-	2005fd
IPP_TYPE	-	**dtSTRING**	20	-	2005fd
IPP_URI	-	**dtMLSTRING**	255	Yes	2005fd
IPP_USER_INFO	-	-	-	-	2005fd
JURISDICTION	-	**dtMLSTRING**	250	Yes	2005
KEYWORD	-	**dtMLSTRING**	50	Yes	-
LANGUAGE	-	**dtLANG**	-	-	-
LEADTIME	-	**dtFLOAT**	-	-	2005fd
LEGAL_INFO	-	-	-	-	2005
LEGAL_TEXT	-	**dtMLSTRING**	64000	Yes	2005fd

Copyright © 2022 BME e.V. - BMEcat® Version 2005.2
Copyright © 2010-2021 BME e.V. - BMEcat® Version 2005.1
Copyright © 2005-2009 BME e.V. - BMEcat® Version 2005
Copyright © 1998–2004 Fraunhofer IAO, Stuttgart; Universität Essen BLI - BMEcat® Version 1.2

Element name	Default value	Data type	Field length	Lang. specific	l.chg. in ver.
LENGTH	-	**dtNUMBER**	-	-	2005fd
LOCALE	-	**dtLOCALE**	-	-	2005.1
LOCATION	-	**dtSTRING**	250	-	2005fd
LOGIN	-	**dtSTRING**	60	-	2005fd
LOWER_BOUND	-	**dtNUMBER**	-	-	-
MANUFACTURER_AID	-	**dtSTRING**	50	-	-
MANUFACTURER_IDREF	-	**dtSTRING**	250	-	2005fd
MANUFACTURER_NAME	-	**dtSTRING**	50	-	-
MANUFACTURER_PID	-	**dtSTRING**	50	-	2005fd
MANUFACTURER_TYPE_DESCR	-	**dtMLSTRING**	50	Yes	1.2_fd
MAPPING_LEVEL	-	**dtSTRING**	20	-	2005fd
MAPPING_TYPE	-	**dtSTRING**	20	-	2005fd
MAX_OCCURANCE	-	**dtCOUNT**	-	-	2005fd
MEANS_OF_TRANSPORT	-	-	-	-	2005fd
MEANS_OF_TRANSPORT_ID	-	**dtSTRING**	50	-	2005fd
MEANS_OF_TRANSPORT_NAME	-	**dtMLSTRING**	50	Yes	2005fd
MIME	-	-	-	-	-
MIME_ALT	-	**dtMLSTRING**	80	Yes	2005fd
MIME_DESCR	-	**dtMLSTRING**	250	Yes	-
MIME_INFO	-	-	-	-	-
MIME_ORDER	-	**dtINTEGER**	-	-	-
MIME_PURPOSE	-	**dtSTRING**	20	-	2005fd
MIME_ROOT	-	**dtMLSTRING**	250	Yes	-
MIME_SOURCE	-	**dtMLSTRING**	255	Yes	-
MIME_TYPE	-	**dtSTRING**	100	-	2005.2
MIN_OCCURANCE	-	**dtCOUNT**	-	-	2005fd
NAME	-	**dtMLSTRING**	50	Yes	-
NAME2	-	**dtMLSTRING**	50	Yes	-
NAME3	-	**dtMLSTRING**	50	Yes	-
NO_CU_PER_OU	1	**dtNUMBER**	-	-	2005

Copyright © 2022 BME e.V. - BMEcat® Version 2005.2
Copyright © 2010-2021 BME e.V. - BMEcat® Version 2005.1
Copyright © 2005-2009 BME e.V. - BMEcat® Version 2005
Copyright © 1998–2004 Fraunhofer IAO, Stuttgart; Universität Essen BLI - BMEcat® Version 1.2

Element name	Default value	Data type	Field length	Lang. specific	l.chg. in ver.
ORDER_UNIT	-	**dtPUNIT**	-	-	-
ORIGINAL_DATE	-	**dtDATETIME**	-	-	2005fd
PACKING_UNIT	-	-	-	-	2005
PACKING_UNITS	-	-	-	-	2005fd
PACKING_UNIT_CODE	-	**dtPUNIT**	-	-	2005fd
PACKING_UNIT_DESCR	-	**dtMLSTRING**	250	Yes	2005fd
PARAMETER	-	-	-	-	2005fd
PARAMETERS	-	-	-	-	2005fd
PARAMETER_BASICS	-	-	-	-	2005fd
PARAMETER_DEFAULT_VALUE	-	**dtSTRING**	250	-	2005fd
PARAMETER_DEFINITION	-	-	-	-	2005
PARAMETER_DEFINITIONS	-	-	-	-	2005fd
PARAMETER_DESCR	-	**dtMLSTRING**	250	Yes	2005fd
PARAMETER_MEANING	-	**dtSTRING**	20	-	2005fd
PARAMETER_NAME	-	**dtMLSTRING**	100	Yes	2005fd
PARAMETER_ORDER	-	**dtINTEGER**	-	-	2005fd
PARAMETER_ORIGIN	-	**dtMLSTRING**	6000	Yes	2005fd
PARAMETER_SYMBOL	-	**dtSTRING**	60	-	2005fd
PARAMETER_SYMBOLREF	-	**dtSTRING**	60	-	2005fd
PARAMETER_UNIT	-	**dtMLSTRING**	60	Yes	2005
PARAMETER_VALUE	-	**dtSTRING**	250	-	2005fd
PARENT_ID	-	**dtSTRING**	50	-	-
PARTIES	-	-	-	-	2005fd
PARTY	-	-	-	-	2005fd
PARTY_ID	-	**dtSTRING**	250	-	2005fd
PARTY_IDREF	-	**dtSTRING**	250	-	2005fd
PARTY_ROLE	-	**dtSTRING**	20	-	2005fd
PART_ALTERNATIVE	-	-	-	-	2005fd
PART_SELECTION_TYPE	non-distinct	**dtSTRING**	20	-	2005fd

Copyright © 2022 BME e.V. - BMEcat® Version 2005.2
Copyright © 2010-2021 BME e.V. - BMEcat® Version 2005.1
Copyright © 2005-2009 BME e.V. - BMEcat® Version 2005
Copyright © 1998–2004 Fraunhofer IAO, Stuttgart; Universität Essen BLI - BMEcat® Version 1.2

Element name	Default value	Data type	Field length	Lang. specific	l.chg. in ver.
PASSWORD	-	**dtSTRING**	20	-	2005fd
PHONE	-	**dtMLSTRING**	50	Yes	2005fd
PREDEFINED_CONFIG	-	-	-	-	2005fd
PREDEFINED_CONFIGS	-	-	-	-	2005fd
PREDEFINED_CONFIG_CODE	-	**dtSTRING**	6000	-	2005fd
PREDEFINED_CONFIG_COVERAGE	partial	**dtSTRING**	20	-	2005fd
PREDEFINED_CONFIG_DESCR	-	**dtMLSTRING**	250	Yes	2005fd
PREDEFINED_CONFIG_NAME	-	**dtMLSTRING**	100	Yes	2005fd
PREDEFINED_CONFIG_ORDER	-	**dtINTEGER**	-	-	2005fd
PRICE_AMOUNT	-	**dtNUMBER**	-	-	-
PRICE_BASE	-	-	-	-	2005fd
PRICE_CURRENCY	-	**dtCURRENCIES**	-	-	-
PRICE_FACTOR	1	**dtNUMBER**	-	-	2005
PRICE_FLAG	-	**dtBOOLEAN**	-	-	-
PRICE_FORMULA	-	-	-	-	2005fd
PRICE_QUANTITY	1	**dtNUMBER**	-	-	2005
PRICE_TYPE	-	**dtSTRING**	20	-	2005fd
PRICE_UNIT	-	**dtPUNIT**	-	-	2005fd
PRICE_UNIT_FACTOR	1	**dtFLOAT**	-	-	2005
PRODUCT in context T_NEW_CATALOG	-	-	-	-	2005
PRODUCT in context T_UPDATE_PRICES	-	-	-	-	2005fd
PRODUCT in context T_UPDATE_PRODUCTS	-	-	-	-	2005
PRODUCT_CATEGORY	-	**dtSTRING**	20	-	2005fd
PRODUCT_CONFIG_DETAILS	-	-	-	-	2005fd
PRODUCT_CONTACTS	-	-	-	-	2005
PRODUCT_DETAILS	-	-	-	-	2005fd
PRODUCT_DIMENSIONS	-	-	-	-	2005fd
PRODUCT_FEATURES	-	-	-	-	2005
PRODUCT_IPP_DETAILS	-	-	-	-	2005fd
PRODUCT_LOGISTIC_DETAILS	-	-	-	-	2005

Copyright © 2022 BME e.V. - BMEcat® Version 2005.2
Copyright © 2010-2021 BME e.V. - BMEcat® Version 2005.1
Copyright © 2005-2009 BME e.V. - BMEcat® Version 2005
Copyright © 1998–2004 Fraunhofer IAO, Stuttgart; Universität Essen BLI - BMEcat® Version 1.2

Element name	Default value	Data type	Field length	Lang. specific	l.chg. in ver.
PRODUCT_ORDER	-	**dtINTEGER**	-	-	2005fd
PRODUCT_ORDER_DETAILS	-	-	-	-	2005fd
PRODUCT_PRICE	-	-	-	-	2005
PRODUCT_PRICE_DETAILS	-	-	-	-	2005fd
PRODUCT_REFERENCE	-	-	-	-	2005
PRODUCT_STATUS	-	**dtMLSTRING**	250	Yes	2005fd
PRODUCT_TO_CATALOGGROUP_MAP in context T_NEW_CATALOG	-	-	-	-	2005fd
PRODUCT_TO_CATALOGGROUP_MAP in context T_UPDATE_PRODUCTS	-	-	-	-	2005fd
PRODUCT_TO_CATALOGGROUP_MAP_ORDER	-	**dtINTEGER**	-	-	1.2
PRODUCT_TYPE	-	**dtSTRING**	50	-	2005fd
PROD_ID	-	**dtSTRING**	32	-	-
PROD_ID_TO	-	**dtSTRING**	80	-	2005fd
PUBLIC_KEY	-	**dtSTRING**	64000	-	1.2_fd
QUANTITY_INTERVAL	1	**dtFLOAT**	-	-	2005
QUANTITY_MAX	-	**dtFLOAT**	-	-	2005fd
QUANTITY_MIN	1	**dtFLOAT**	-	-	2005
REFERENCE_DESCR	-	**dtMLSTRING**	250	Yes	2005fd
REFERENCE_FEATURE_GROUP_ID	-	**dtSTRING**	60	-	-
REFERENCE_FEATURE_GROUP_ID2	-	**dtSTRING**	60	-	2005fd
REFERENCE_FEATURE_GROUP_NAME	-	**dtMLSTRING**	60	Yes	-
REFERENCE_FEATURE_SYSTEM_NAME	-	**dtSTRING**	80	-	-
REMARKS	-	**dtMLSTRING**	64000	Yes	-
REVISION	-	**dtSTRING**	20	-	2005fd
REVISION_DATE	-	**dtDATETIME**	-	-	2005fd
SEGMENT	-	**dtMLSTRING**	100	Yes	1.2_fd
SOURCE_NAME	-	**dtMLSTRING**	80	Yes	2005
SOURCE_URI	-	**dtSTRING**	255	-	2005fd
SPECIAL_TREATMENT_CLASS	-	**dtSTRING**	20	-	-
STARTVALUE	-	**dtNUMBER**	-	-	2005fd
STATE	-	**dtMLSTRING**	50	Yes	-

Copyright © 2022 BME e.V. - BMEcat® Version 2005.2
Copyright © 2010-2021 BME e.V. - BMEcat® Version 2005.1
Copyright © 2005-2009 BME e.V. - BMEcat® Version 2005
Copyright © 1998–2004 Fraunhofer IAO, Stuttgart; Universität Essen BLI - BMEcat® Version 1.2

Element name	Default value	Data type	Field length	Lang. specific	l.chg. in ver.
STATISTICS_FACTOR	-	**dtNUMBER**	-	-	2005
STEP_DESCR_LONG	-	**dtMLSTRING**	64000	Yes	2005fd
STEP_DESCR_SHORT	-	**dtMLSTRING**	3000	Yes	2005fd
STEP_HEADER	-	**dtMLSTRING**	250	Yes	2005fd
STEP_ID	-	**dtSTRING**	60	-	2005fd
STEP_INTERACTION_TYPE	force_ userinput	**dtSTRING**	20	-	2005fd
STEP_ORDER	-	**dtINTEGER**	-	-	2005fd
STREET	-	**dtMLSTRING**	50	Yes	-
SUB_TIME_SPANS	-	-	-	-	2005
SUPPLIER	-	-	-	-	-
SUPPLIER_AID	-	**dtSTRING**	32	-	-
SUPPLIER_AID_SUPPLEMENT	-	**dtSTRING**	31	-	-
SUPPLIER_ALT_AID	-	**dtSTRING**	50	-	-
SUPPLIER_ALT_PID	-	**dtSTRING**	50	-	2005fd
SUPPLIER_ID	-	**dtSTRING**	250	-	2005fd
SUPPLIER_IDREF	-	**dtSTRING**	250	-	2005fd
SUPPLIER_NAME	-	**dtSTRING**	50	-	-
SUPPLIER_PID	-	**dtSTRING**	32	-	2005
SUPPLIER_PIDREF	-	**dtSTRING**	32	-	2005fd
SYNONYM	-	**dtMLSTRING**	80	Yes	2005fd
TAX	-	**dtNUMBER**	-	-	-
TAX_CATEGORY	-	**dtSTRING**	80	-	2005
TAX_DETAILS	-	-	-	-	2005
TAX_TYPE	vat	**dtSTRING**	250	-	2005
TERM	-	-	-	-	2005fd
TERM_CONDITION	-	**dtSTRING**	3000	-	2005fd
TERM_EXPRESSION	-	**dtSTRING**	3000	-	2005fd
TERM_ID	-	**dtSTRING**	20	-	2005fd
TERRITORIES	-	-	-	-	2005fd

Copyright © 2022 BME e.V. - BMEcat® Version 2005.2
Copyright © 2010-2021 BME e.V. - BMEcat® Version 2005.1
Copyright © 2005-2009 BME e.V. - BMEcat® Version 2005
Copyright © 1998–2004 Fraunhofer IAO, Stuttgart; Universität Essen BLI - BMEcat® Version 1.2

Element name	Default value	Data type	Field length	Lang. specific	l.chg. in ver.
TERRITORY	-	**dtCOUNTRIES**	-	-	1.2_fd
TIME	-	**dtTIMETYPE**	-	-	-
TIMEZONE	-	**dtTIMEZONETYPE**	-	-	-
TIME_BASE	-	**dtSTRING**	20	-	2005
TIME_SPAN	-	-	-	-	2005
TIME_VALUE_DURATION	-	**dtSTRING**	20	-	2005
TIME_VALUE_END	-	**dtSTRING**	50	-	2005fd
TIME_VALUE_INTERVAL	1	**dtSTRING**	20	-	2005
TIME_VALUE_START	-	**dtSTRING**	50	-	2005fd
TITLE	-	**dtMLSTRING**	20	Yes	2005fd
TRANSPORT	-	-	-	-	2005fd
TRANSPORT_REMARK	-	**dtMLSTRING**	64000	Yes	2005fd
T_NEW_CATALOG	-	-	-	-	2005
T_UPDATE_PRICES	-	-	-	-	2005
T_UPDATE_PRODUCTS	-	-	-	-	2005
UNIT	-	-	-	-	2005fd
UNITS	-	-	-	-	-
UNIT_CODE	-	**dtSTRING**	20	-	2005fd
UNIT_DESCR	-	**dtMLSTRING**	16000	Yes	2005
UNIT_ID	-	**dtSTRING**	60	-	-
UNIT_NAME	-	**dtMLSTRING**	80	Yes	2005fd
UNIT_SHORTNAME	-	**dtMLSTRING**	80	Yes	2005fd
UNIT_URI	-	**dtSTRING**	255	-	2005fd
URL	-	**dtSTRING**	255	-	2005fd
USER_DEFINED_EXTENSIONS	-	**udxPRODUCT**	-	-	-
USER_DEFINED_EXTENSIONS in context HEADER	-	**udxCATALOGGROUP**	-	-	-
USER_DEFINED_EXTENSIONSin context CATALOG_STRUCTURE	-	**udxHEADER**	-	-	-
VALID_END_DATE	-	**dtDATETIME**	-	-	2005fd
VALID_START_DATE	-	**dtDATETIME**	-	-	2005fd
VALUE_IDREF	-	**dtSTRING**	60	-	2005fd

Copyright © 2022 BME e.V. - BMEcat® Version 2005.2
Copyright © 2010-2021 BME e.V. - BMEcat® Version 2005.1
Copyright © 2005-2009 BME e.V. - BMEcat® Version 2005
Copyright © 1998–2004 Fraunhofer IAO, Stuttgart; Universität Essen BLI - BMEcat® Version 1.2

Element name	Default value	Data type	Field length	Lang. specific	l.chg. in ver.
VALUE_ORDER	-	**dtINTEGER**	-	-	2005fd
VALUE_RANGE	-	-	-	-	2005fd
VALUE_SIMPLE	-	**dtSTRING**	80	-	2005fd
VALUE_TEXT	-	**dtMLSTRING**	80	Yes	2005fd
VARIANT	-	-	-	-	-
VARIANTS	-	-	-	-	1.2_fd
VAT_ID	-	**dtSTRING**	50	-	2005fd
VERSION	-	**dtSTRING**	20	-	2005fd
VERSION_DATE	-	**dtDATETIME**	-	-	2005fd
VOLUME	-	**dtNUMBER**	-	-	2005fd
VORDER	-	**dtINTEGER**	-	-	-
WEIGHT	-	**dtNUMBER**	-	-	2005fd
WIDTH	-	**dtNUMBER**	-	-	2005fd
ZIP	-	**dtMLSTRING**	20	Yes	-
ZIPBOX	-	**dtMLSTRING**	20	Yes	-

Copyright © 2022 BME e.V. - BMEcat® Version 2005.2
Copyright © 2010-2021 BME e.V. - BMEcat® Version 2005.1
Copyright © 2005-2009 BME e.V. - BMEcat® Version 2005
Copyright © 1998–2004 Fraunhofer IAO, Stuttgart; Universität Essen BLI - BMEcat® Version 1.2