US 20130242379A1

(19) United States

(12) Patent Application Publication

(10) Pub. No.: US 2013/0242379 A1

(43) Pub. Date: Sep. 19, 2013

Atlas et al.

(54) METHOD FOR CONTROLLING SIGNAL GAIN OF A RAMAN AMPLIFIER

(75) Inventors: **Dogan Atlas**, Johns Creek, GA (US); **Mohammad Taleghani**, Roswell, GA (US); **Mohammad Mahbobzadeh**, Suwanee, GA (US); **Kyle Hamilton**, Norcross, GA (US)

(73) Assignee: **ADVA AG Optical Networking**, Martinsried (DE)

(21) Appl. No.: **13/419,422**

(22) Filed: **Mar. 13, 2012**

Publication Classification

(51) **Int. Cl.**
H01S 3/30 (2006.01)

(52) **U.S. Cl.**
USPC **359/334**

(57) **ABSTRACT**

A Raman amplifier comprising

a gain control unit adapted to control a pump power of an optical pump signal in response to at least one monitored optical feedback signal reflected back from a transmission line fiber connected to said pumped Raman amplifier.

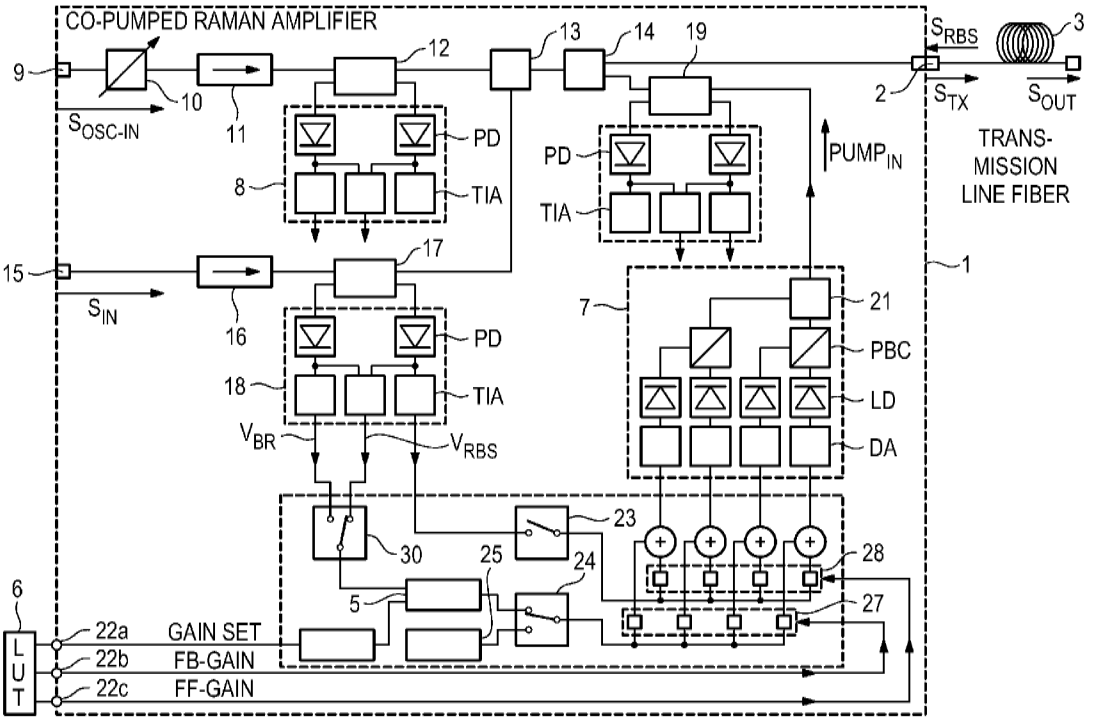

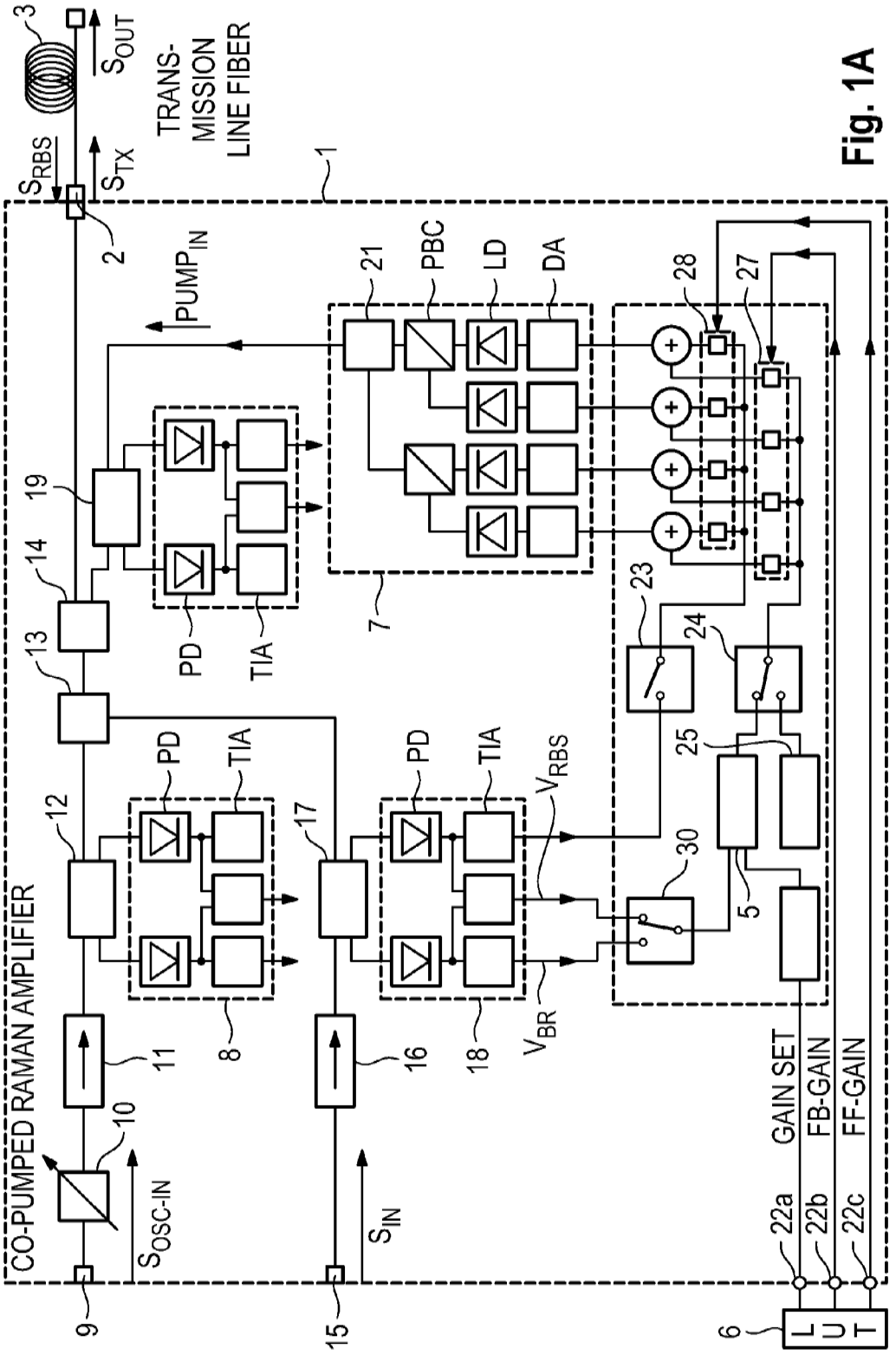
CO-PUMPED RAMAN AMPLIFIER
TRANS-
MISSION
LINE FIBER
S_{RBS}
S_{TX}
S_{OUT}
$PUMP_{IN}$
S_{OSC-IN}
S_{IN}
V_{RBS}
V_{BR}
PD
TIA
PBC
LD
DA
GAIN SET
FB-GAIN
FF-GAIN
LUT
1
2
3
5
6
7
8
9
10
11
12
13
14
15
16
17
18
19
21
22a
22b
22c
23
24
25
27
28
30

Fig. 1A