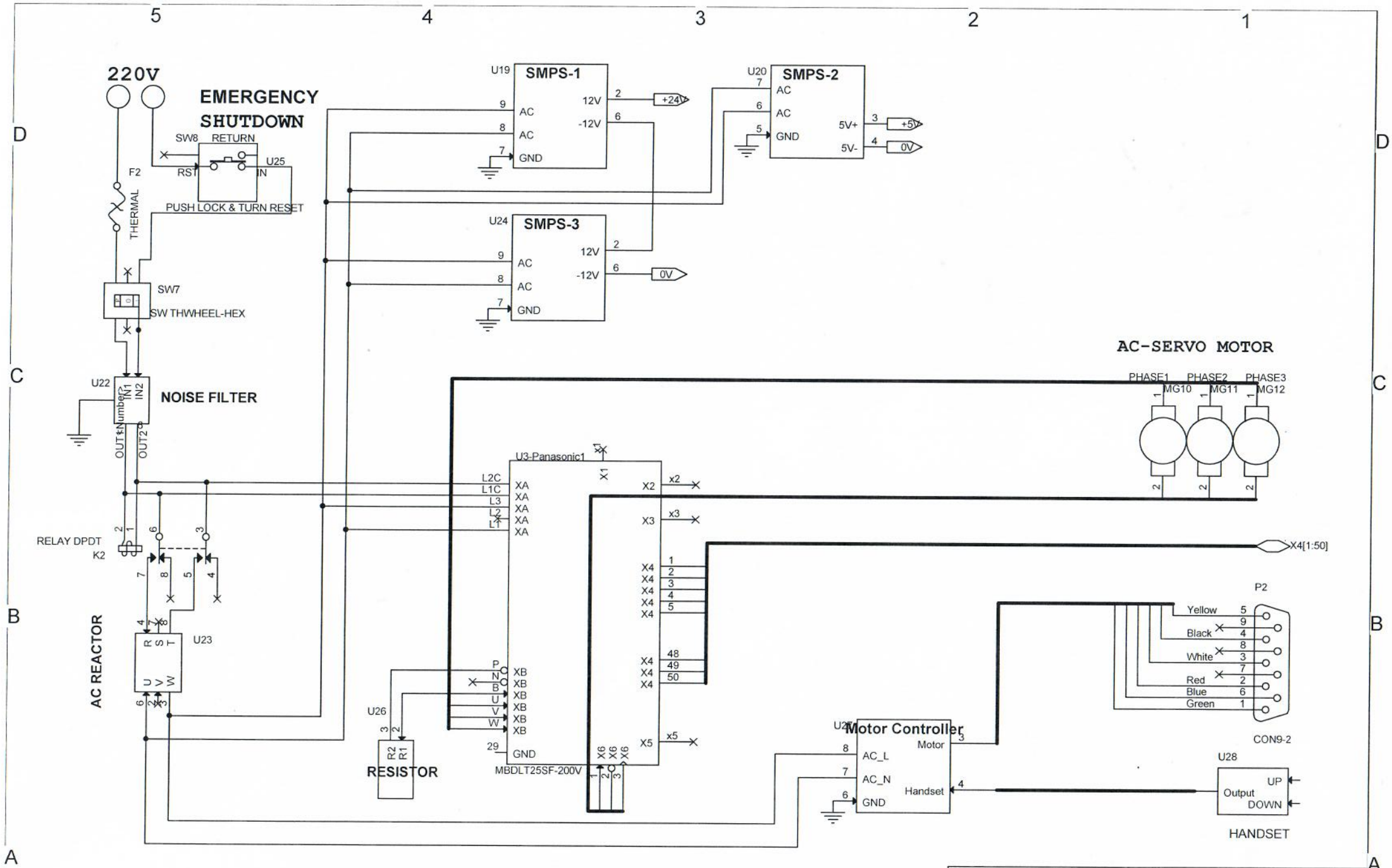

Title	Control Box - AC	
Size A4	Document Number GCUBME-01-2	Rev 1/4
Date: Thursday, September 17, 2020	Sheet 1 of 1	

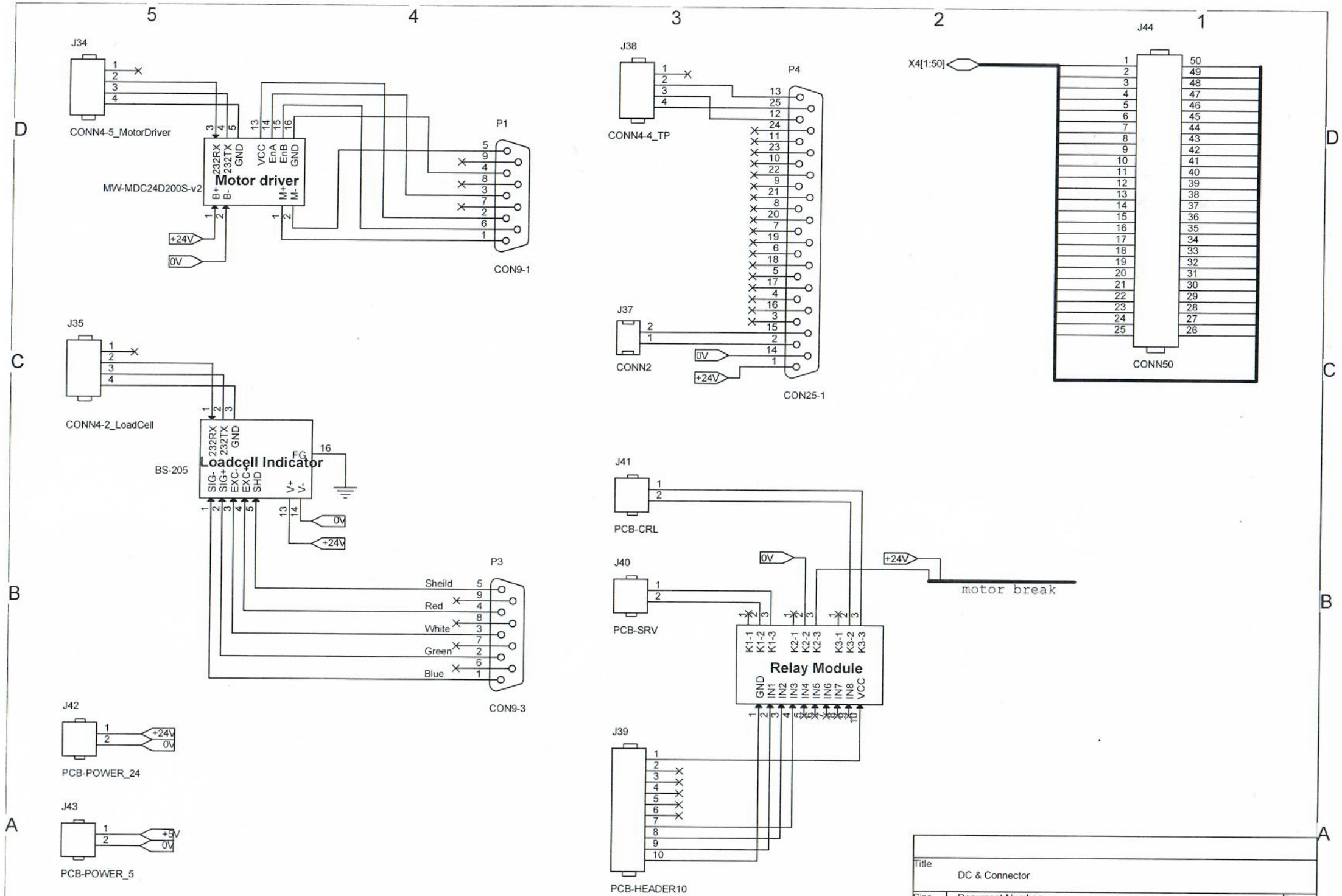

Title	DC & Connector
Size A4	Document Number GCUBME-01-2
Rev	2/4
Date:	Thursday, September 17, 2020
Sheet	1 of 1