1-1. 제어모듈 구조

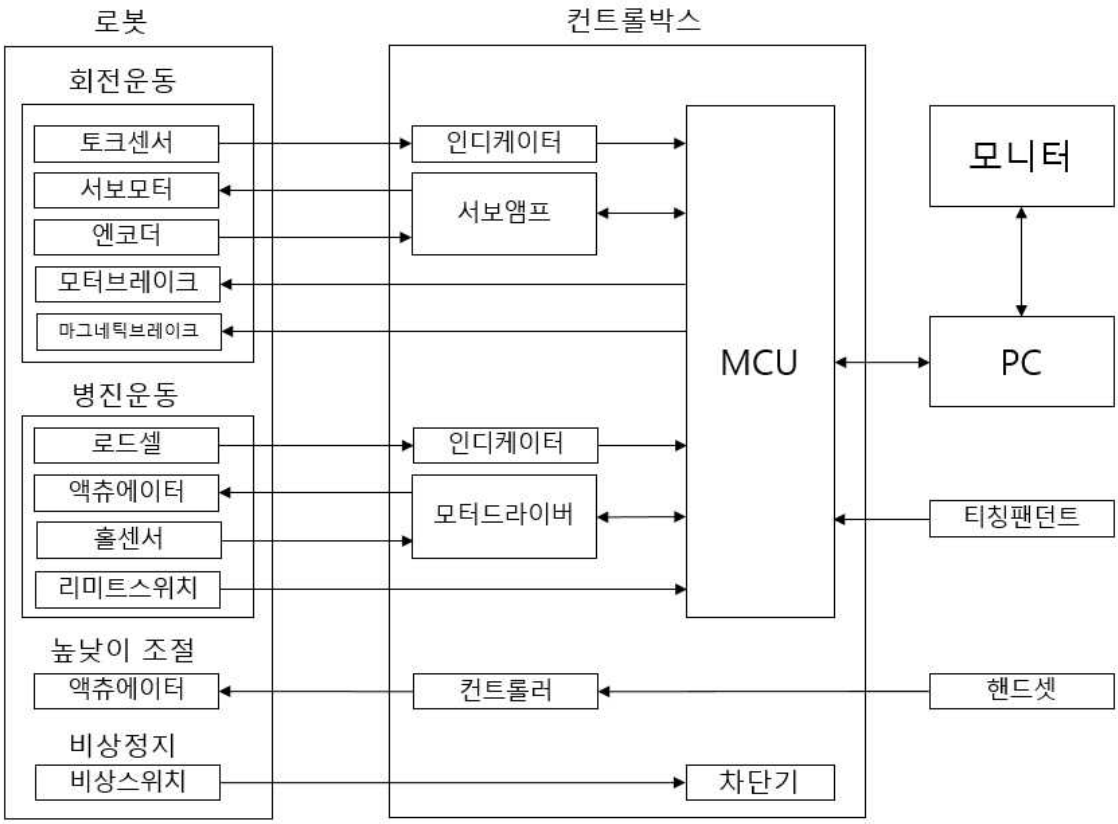

1-2. 시스템 구조

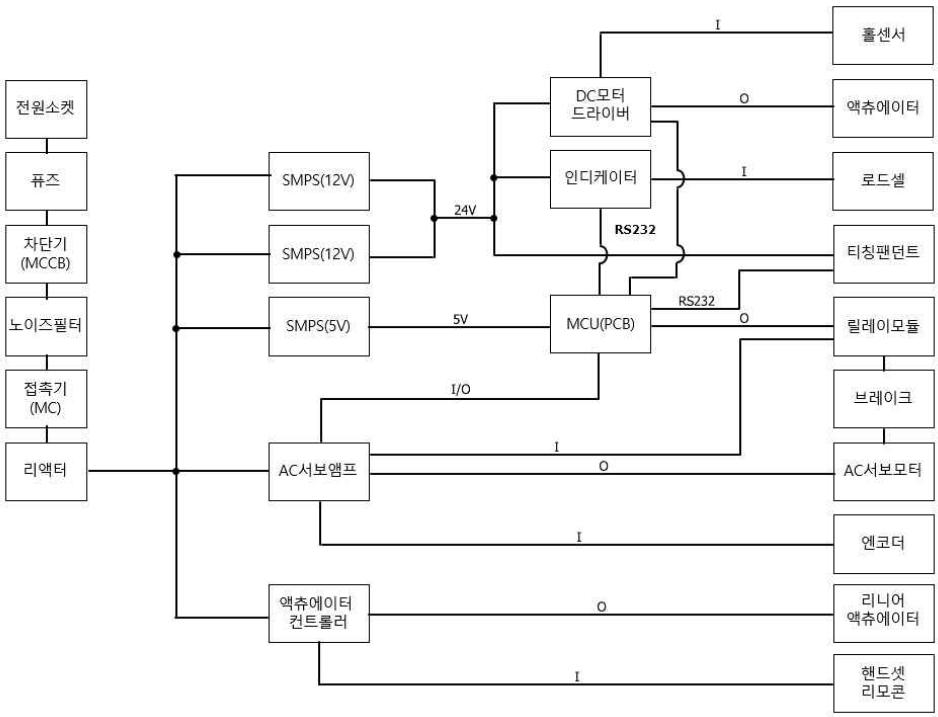

2. 제작부품 목록

품목	모델명	규격	수량	용도
배선용차단기	ABE33Fb	10A / 3P	1	과전류차단
전자접촉기	DMC22b	AC220V, 20A / 1a1b	1	회로개폐
비상스위치	PR-25ER	25파이	1	비상스위치
소켓	SS-120BEL	AC250V, 10A / 40*27	1	전원케이블 연결
퓨즈	FA-02H	10A / 5*20	1	퓨즈
SMPS(5V)	UP50DAA	50W, DC5V, 8A	1	DC 5V
SMPS(12V)	S-350W-12V	350W, DC12V	2	DC 12V, DC 24V
릴레이 모듈	SZH-RLBG-009	8ch / DC5V	1	회로개폐
마이크로컨트롤러	NUCLEO-F429ZI	Cortex M4 / 180MHz / 144pin	1	모듈 제어
티칭팬던트	DTP3		1	사용자 I/F
AC서보모터	MSMF042L1T2	A6, 400W	1	회전운동
AC서보앰프	MBDLT25SF	A6, AC 250V	1	서보모터 제어모듈
회생저항기	MCRA-100	100W	1	모터과부하 방지
리액터	WYACR2-0.75	400W, AC200V	1	고조파 방지
노이즈필터	WYNF-S06T2M	AC250V, 6A	1	노이즈필터
리니어액츄에이터	TA2P	DC24V / 4A(max) / 300mm stroke	2	병진운동
컨트롤러	TC2B	AC220V, 30A	1	높낮이조절 리모콘
모터드라이버	MW-MDC24D200D	10A / 8~30A	1	리니어액츄에이터 제어모듈
로드셀	DBBP-50	50kg(max)	1	압력측정
인디케이터	BS-205	DC24V, RS232	1	ADC, 측정값 전송
회전토크센서	BRDM-N-100	100Nm(max)	1	토크측정
인디케이터	BS-3520	AC220V, RS232	1	ADC, 측정값 전송

3-1. 내부 부품 배치도

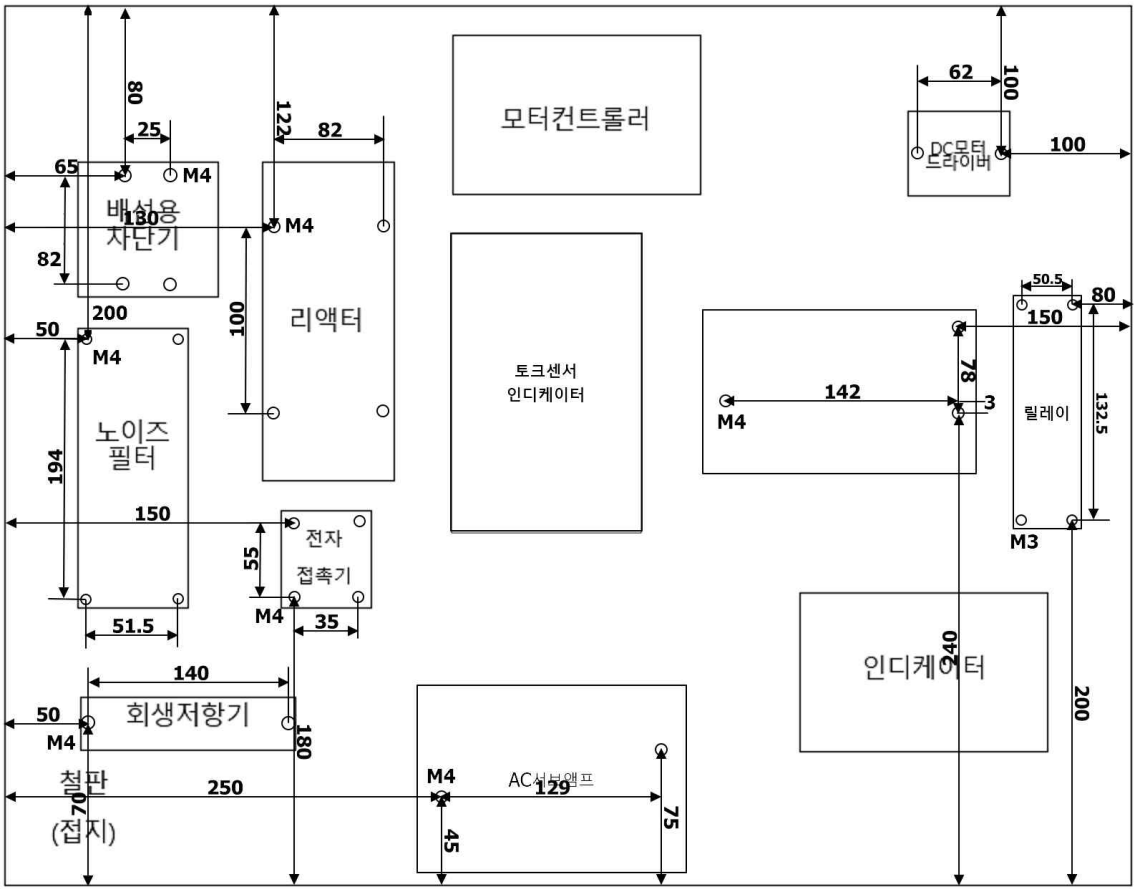

3-2. 내부 도어 부품 배치도

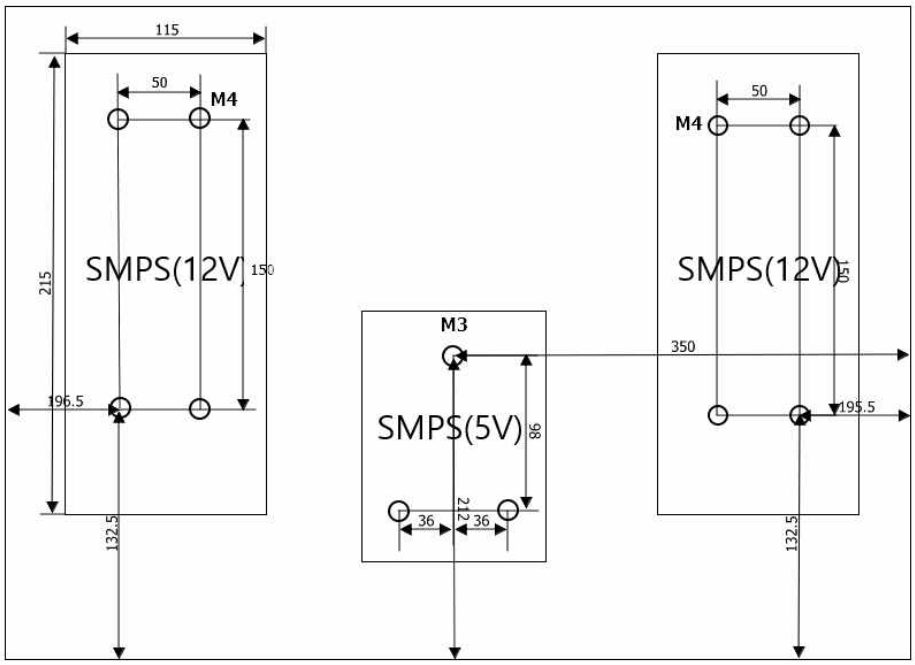

3-3. 내부 벽면 배치도

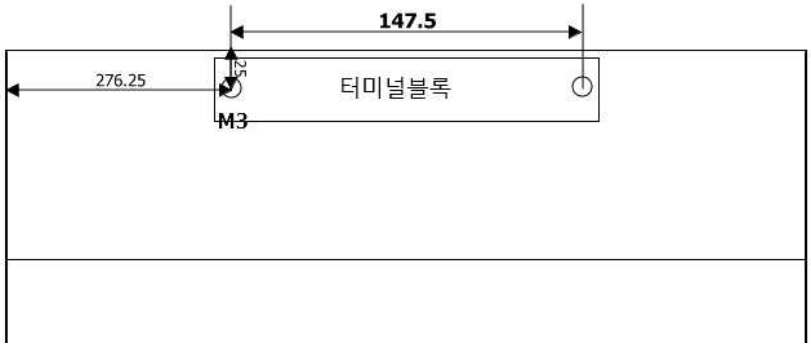

3-3. 외부 좌측 배치도

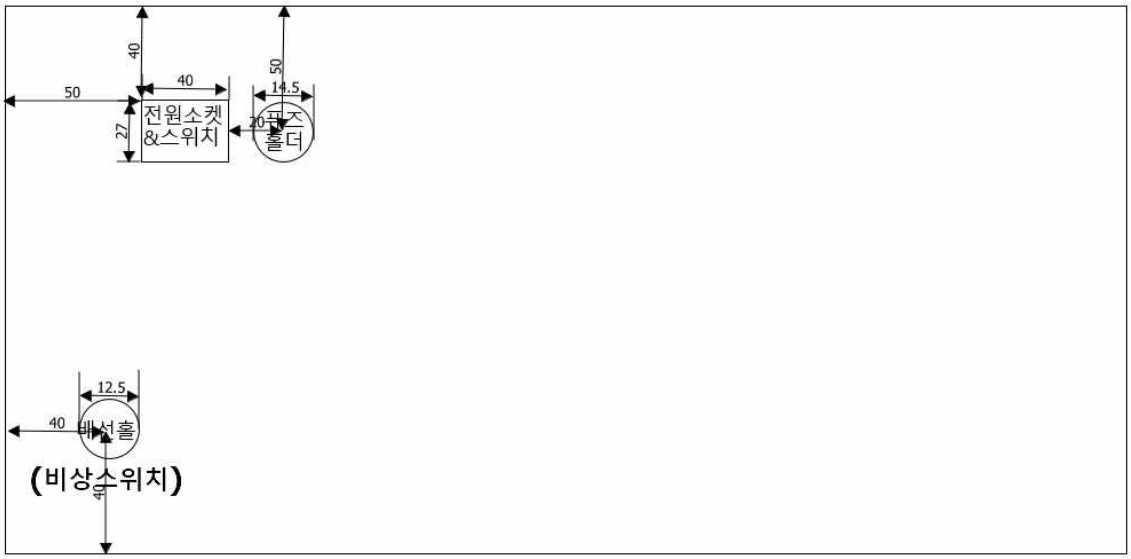

3-4. 외부 우측 배치도

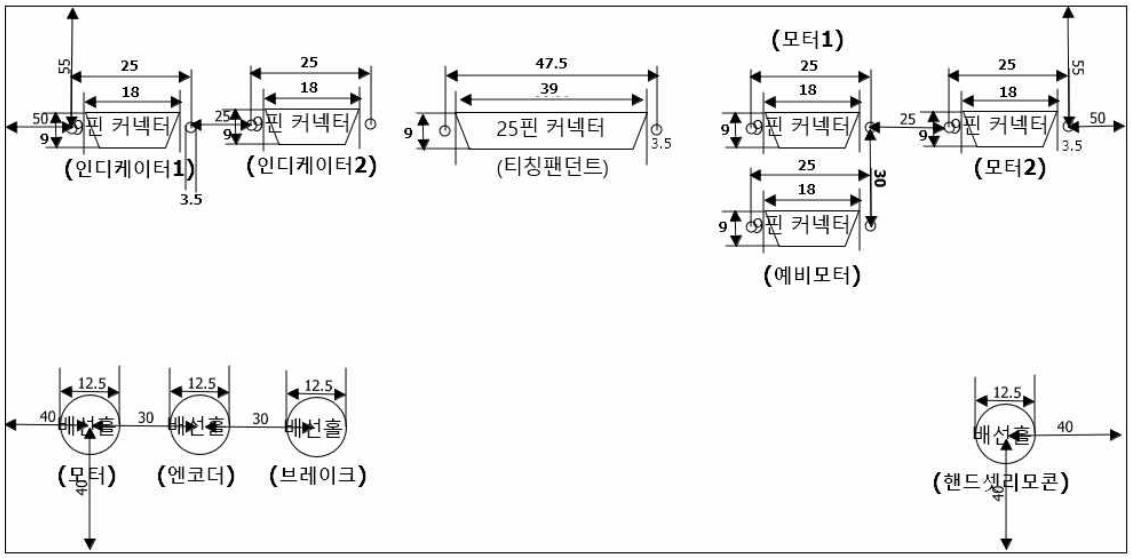

4-1. AC 회로도

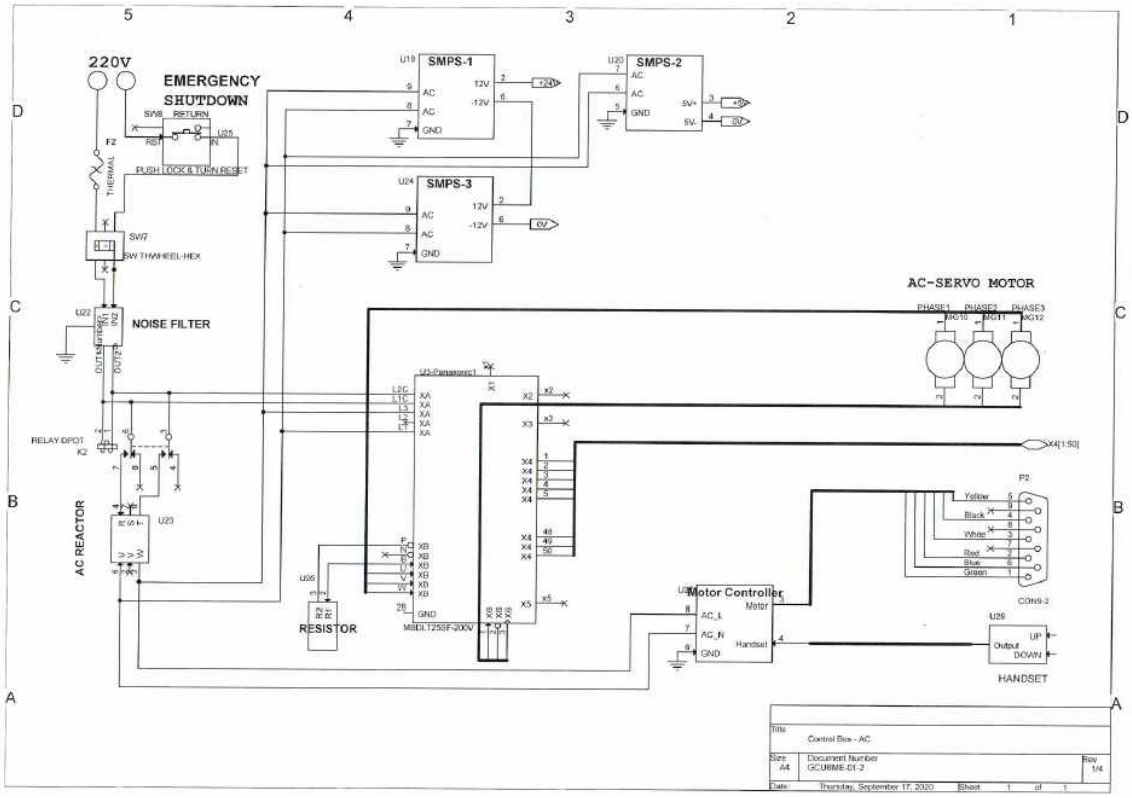

4-2. DC 회로도

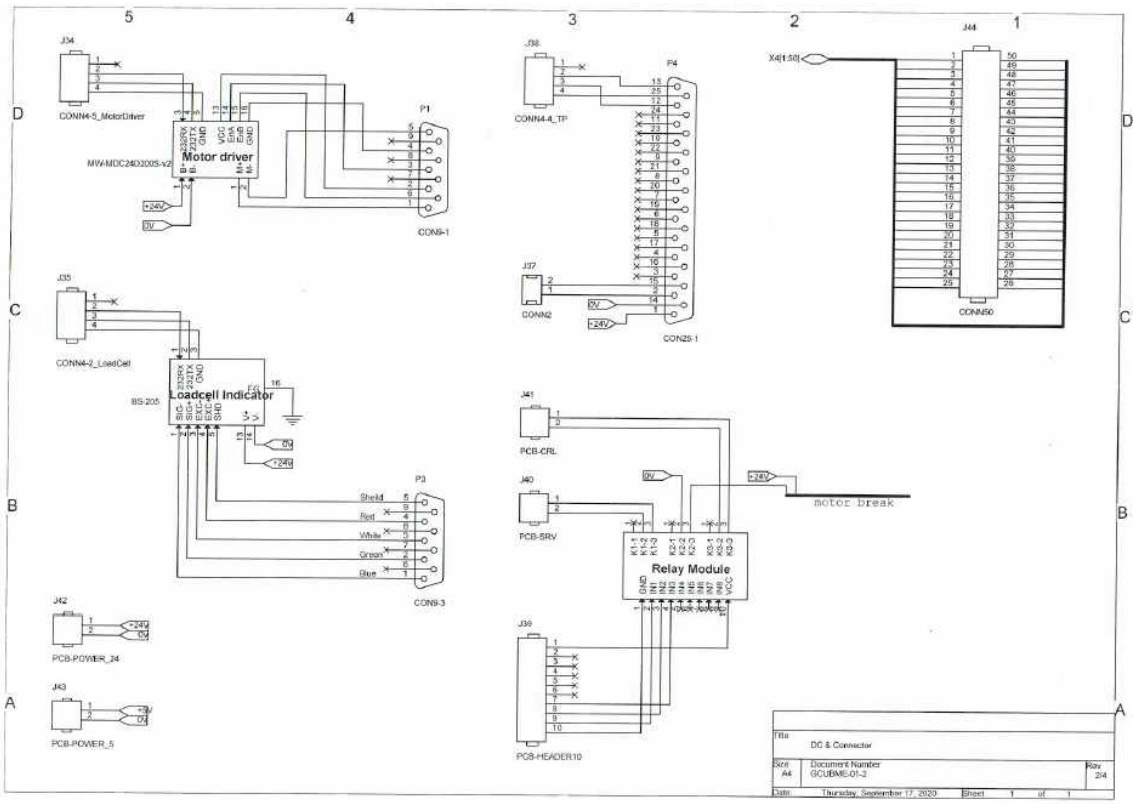

5-1. PCB 회로도 (MCU 커넥터)

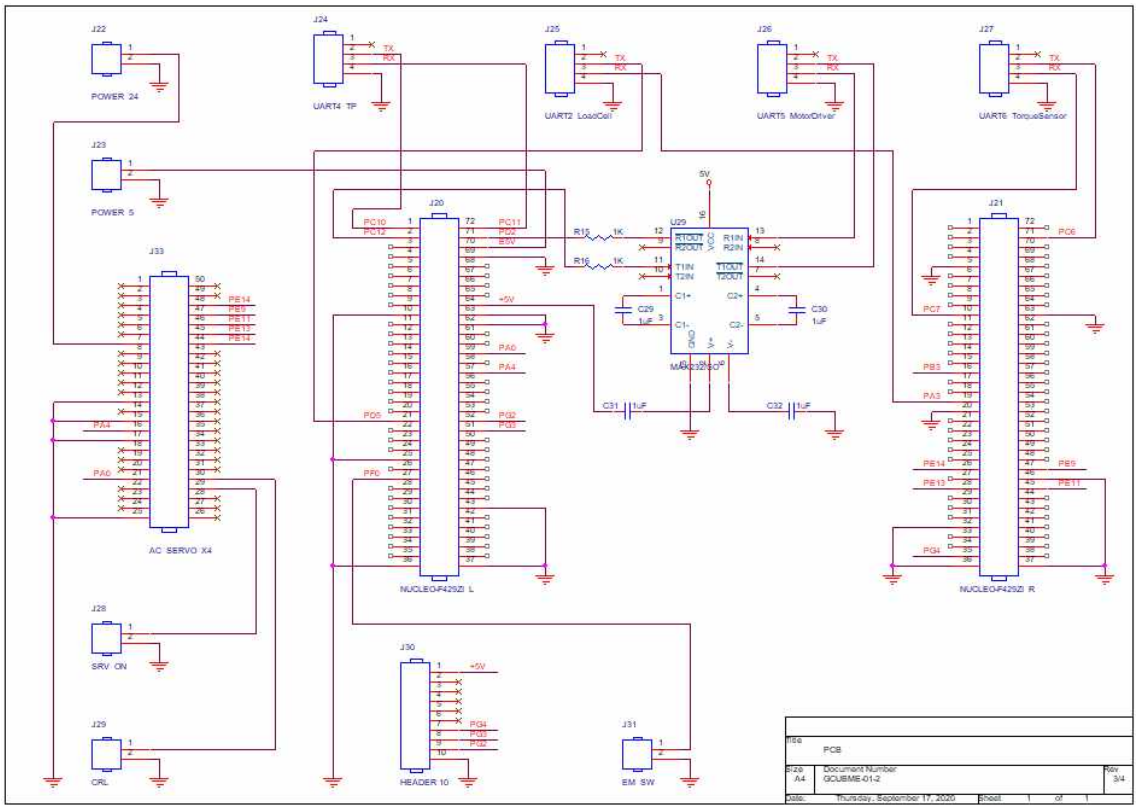

5-2 아트웍 및 조립

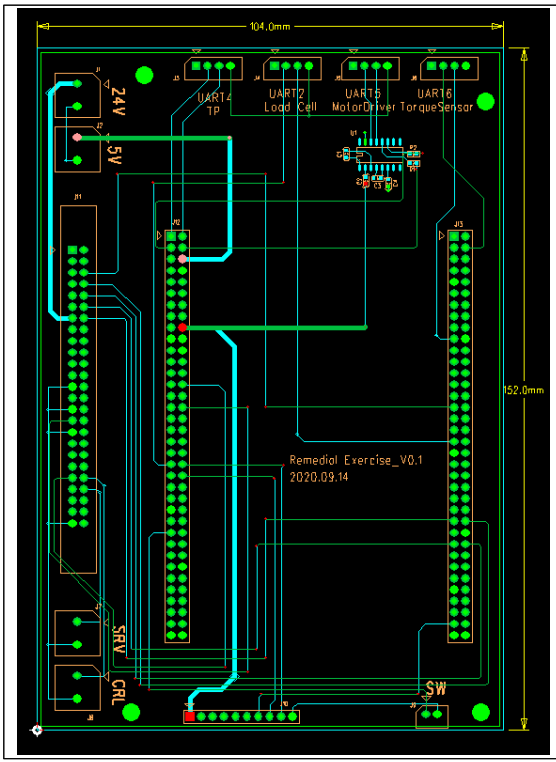

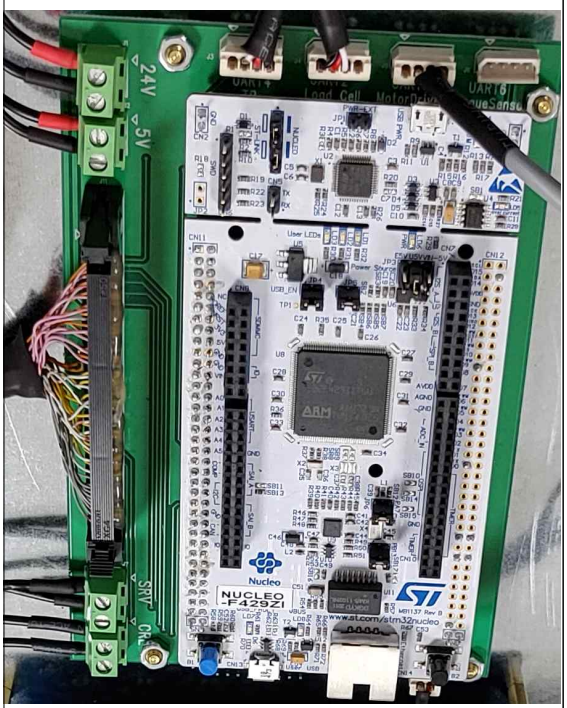

6-1. 배선도(AC)

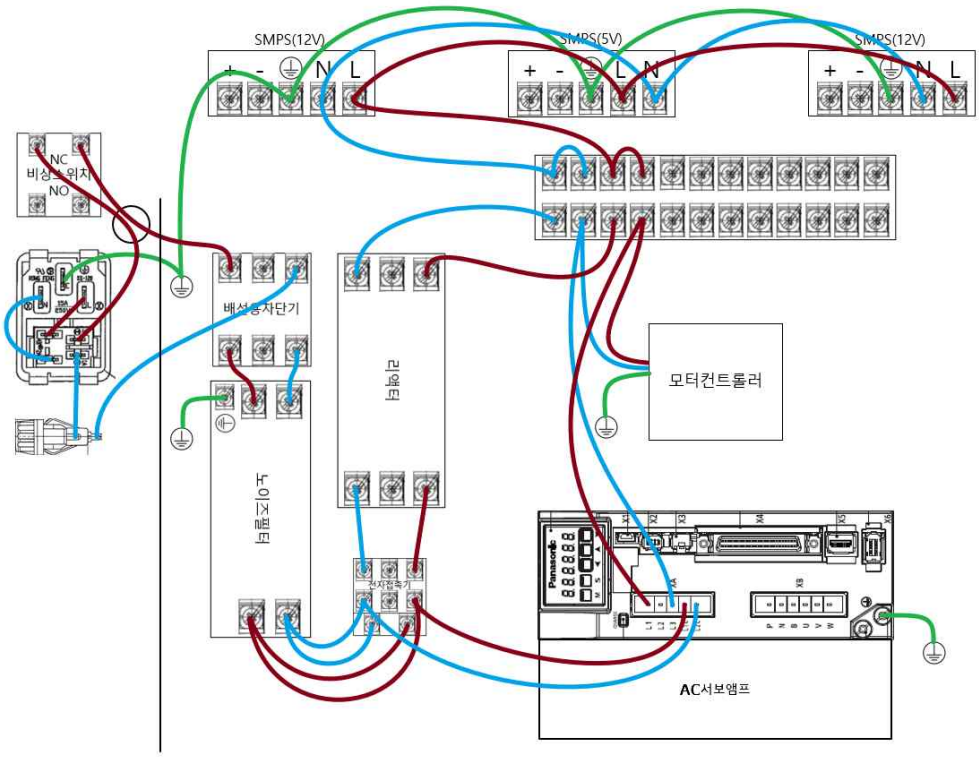

6-2. 배선도(DC)

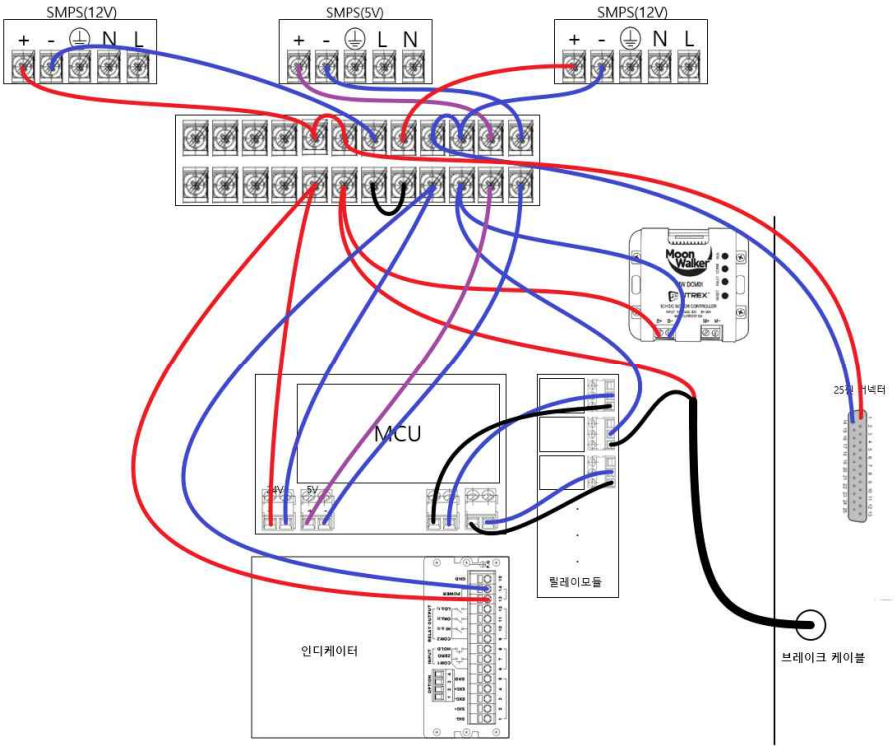

7. AC서보앰프

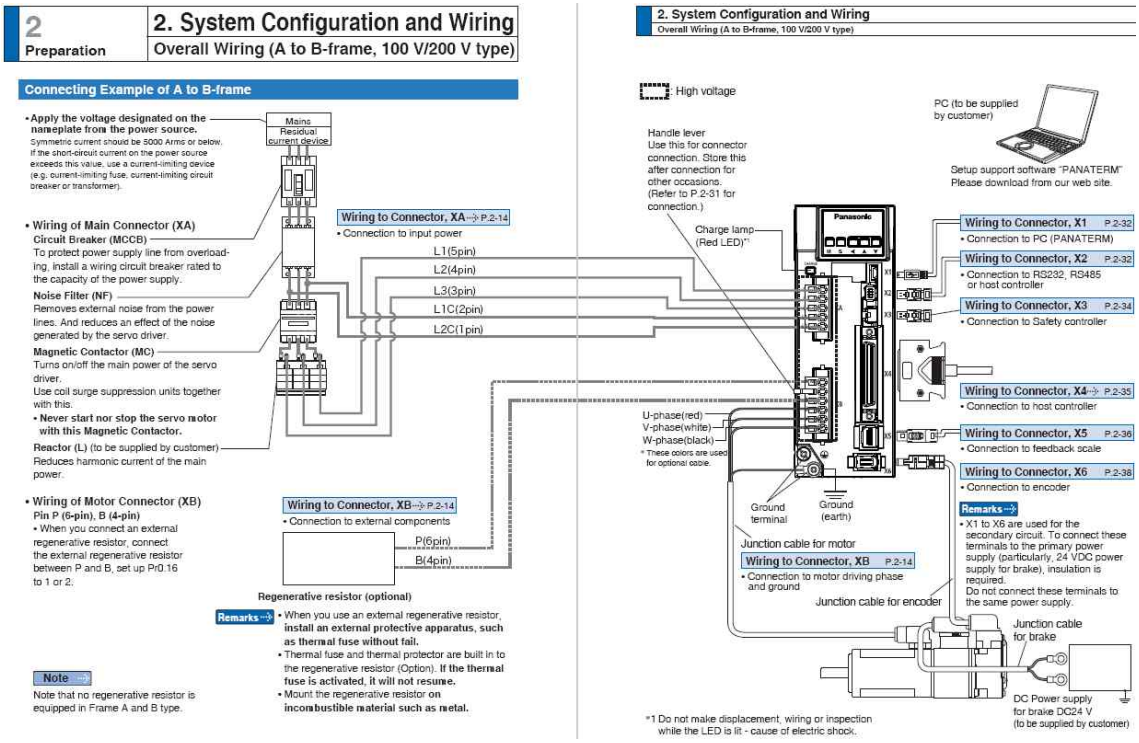
2
Preparation
2. System Configuration and Wiring
Overall Wiring (A to B-frame, 100 V/200 V type)
Connecting Example of A to B-frame
• Apply the voltage designated on the nameplate from the power source.
Symmetric current should be 5000 Arms or below. If the short-circuit current on the power source exceeds this value, use a current-limiting device (e.g. current-limiting fuse, current-limiting circuit breaker or transformer).
Mains
Residual current device
• Wiring of Main Connector (XA)
Circuit Breaker (MCCB)
To protect power supply line from overloading, install a wiring circuit breaker rated to the capacity of the power supply.
Noise Filter (NF)
Removes external noise from the power lines. And reduces an effect of the noise generated by the servo driver.
Magnetic Contactor (MC)
Turns on/off the main power of the servo driver.
Use coil surge suppression units together with this.
• Never start nor stop the servo motor with this Magnetic Contactor.
Reactor (L) (to be supplied by customer)
Reduces harmonic current of the main power.
Wiring to Connector, XA P.2-14
• Connection to input power
L1(5pin)
L2(4pin)
L3(3pin)
L1C(2pin)
L2C(1pin)
• Wiring of Motor Connector (XB)
Pin P (6-pin), B (4-pin)
• When you connect an external regenerative resistor, connect the external regenerative resistor between P and B, set up Pr0.16 to 1 or 2.
Wiring to Connector, XB P.2-14
• Connection to external components
P(6pin)
B(4pin)
Regenerative resistor (optional)
Remarks
• When you use an external regenerative resistor, install an external protective apparatus, such as thermal fuse without fail.
• Thermal fuse and thermal protector are built in to the regenerative resistor (Option). If the thermal fuse is activated, it will not resume.
• Mount the regenerative resistor on incombustible material such as metal.
Note
Note that no regenerative resistor is equipped in Frame A and B type.
2. System Configuration and Wiring
Overall Wiring (A to B-frame, 100 V/200 V type)
: High voltage
PC (to be supplied by customer)
Setup support software "PANATERM"
Please download from our web site.
Handle lever
Use this for connector connection. Store this after connection for other occasions.
(Refer to P.2-31 for connection.)
Charge lamp
(Red LED)*1
Panasonic
Wiring to Connector, X1 P.2-32
• Connection to PC (PANATERM)
Wiring to Connector, X2 P.2-32
• Connection to RS232, RS485 or host controller
Wiring to Connector, X3 P.2-34
• Connection to Safety controller
Wiring to Connector, X4 P.2-35
• Connection to host controller
Wiring to Connector, X5 P.2-36
• Connection to feedback scale
Wiring to Connector, X6 P.2-38
• Connection to encoder
U-phase(red)
V-phase(white)
W-phase(black)
* These colors are used for optional cable.
Ground terminal
Ground (earth)
Junction cable for motor
Wiring to Connector, XB P.2-14
• Connection to motor driving phase and ground
Junction cable for encoder
Remarks
• X1 to X6 are used for the secondary circuit. To connect these terminals to the primary power supply (particularly, 24 VDC power supply for brake), insulation is required.
Do not connect these terminals to the same power supply.
Junction cable for brake
DC Power supply for brake DC24 V (to be supplied by customer)
*1 Do not make displacement, wiring or inspection while the LED is lit - cause of electric shock.

배선도

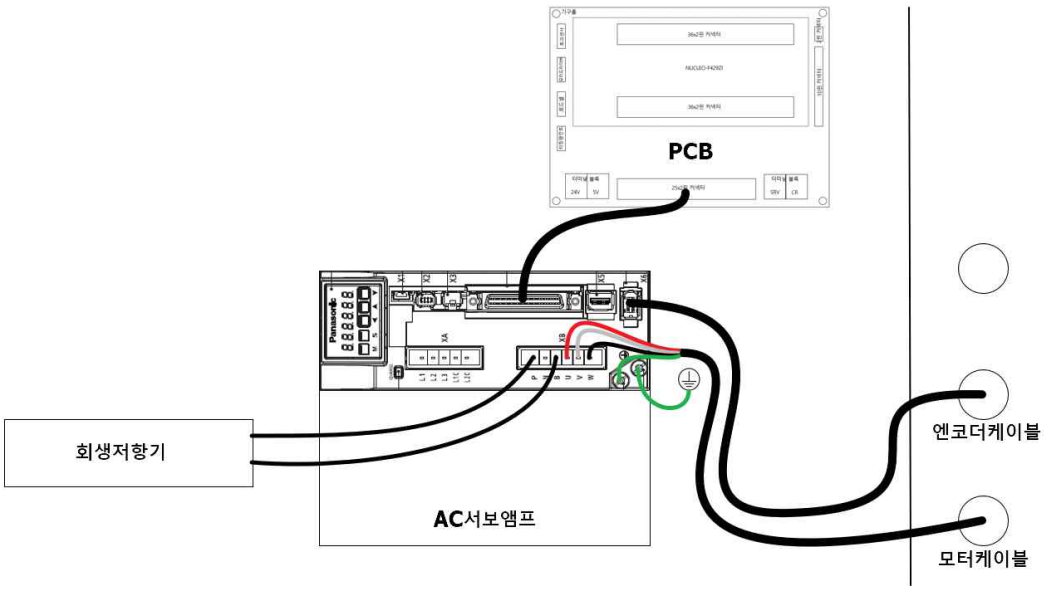
PCB
회생저항기
AC서보앰프
엔코더케이블
모터케이블

커넥터 연결

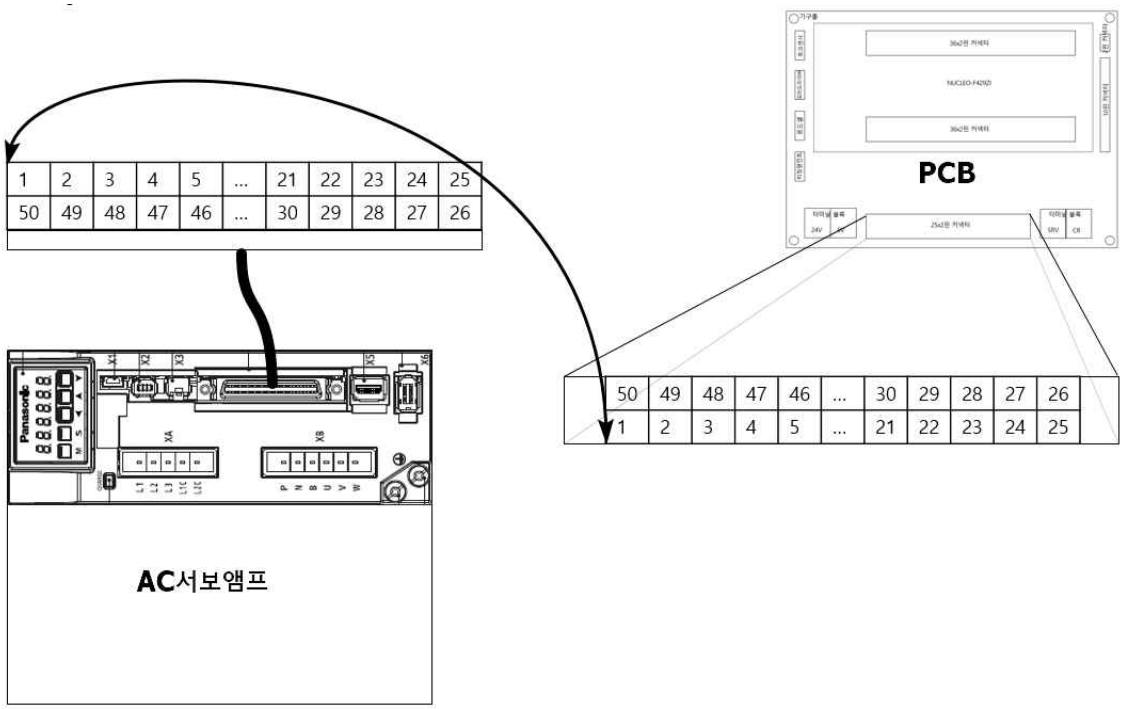
1 2 3 4 5 ... 21 22 23 24 25
50 49 48 47 46 ... 30 29 28 27 26
PCB
50 49 48 47 46 ... 30 29 28 27 26
1 2 3 4 5 ... 21 22 23 24 25
AC서보앰프

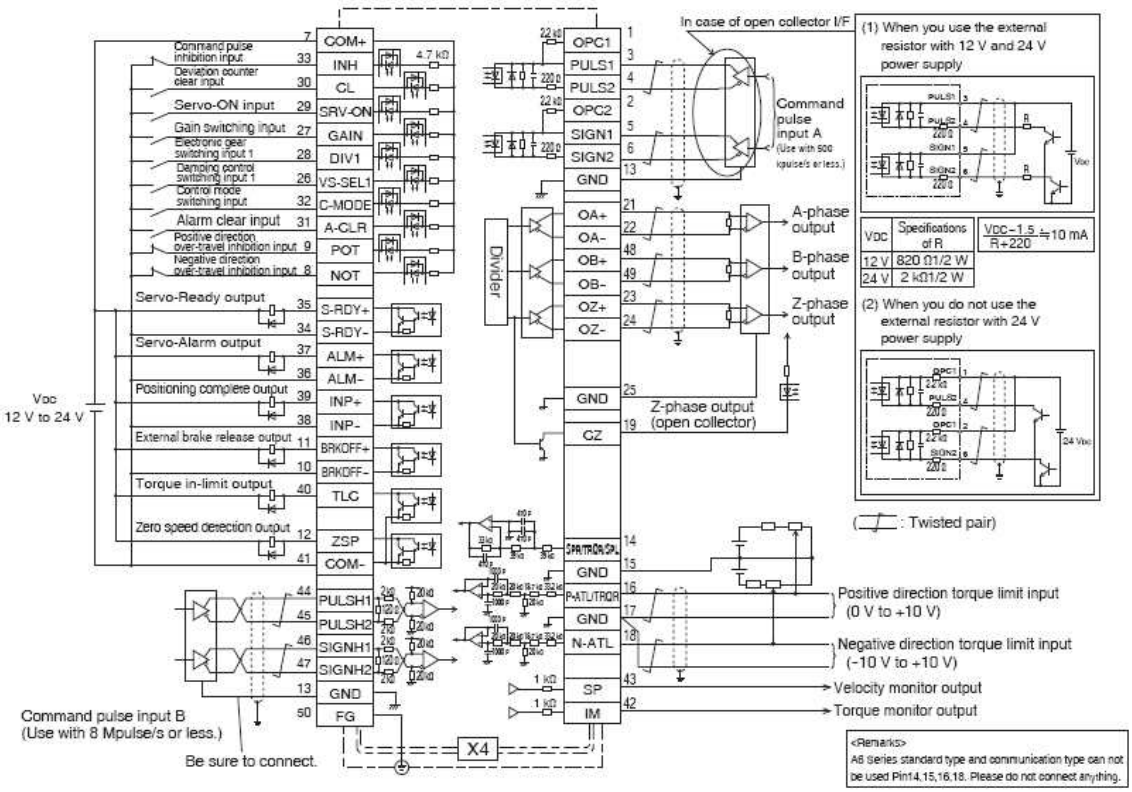
Command pulse inhibition input
Deviation counter clear input
Servo-ON input
Gain switching input
Electronic gear switching input 1
Damping control switching input 1
Control mode switching input
Alarm clear input
Positive direction over-travel inhibition input
Negative direction over-travel inhibition input
Servo-Ready output
Servo-Alarm output
Positioning complete output
External brake release output
Torque in-limit output
Zero speed detection output
COM+
INH
CL
SRV-ON
GAIN
DIV1
VS-SEL1
C-MODE
A-CLR
POT
NOT
S-RDY+
S-RDY-
ALM+
ALM-
INP+
INP-
BRKOFF+
BRKOFF-
TLC
ZSP
COM-
PULSH1
PULSH2
SIGNH1
SIGNH2
GND
FG
Vcc
12 V to 24 V
Command pulse input B
(Use with 8 Mpulse/s or less.)
Be sure to connect.
X4
OPC1
PULS1
PULS2
OPC2
SIGN1
SIGN2
GND
OA+
OA-
OB+
OB-
OZ+
OZ-
GND
GZ
Divider
In case of open collector I/F
Command pulse input A
(Use with 500 kpulse/s or less.)
A-phase output
B-phase output
Z-phase output
Z-phase output (open collector)
P-ATUTRQR
GND
N-ATL
SP
IM
Positive direction torque limit input (0 V to +10 V)
Negative direction torque limit input (-10 V to +10 V)
Velocity monitor output
Torque monitor output
(1) When you use the external resistor with 12 V and 24 V power supply
(2) When you do not use the external resistor with 24 V power supply
Vcc
Specifications of R
12 V
820 Ω1/2 W
24 V
2 kΩ1/2 W
: Twisted pair)
<Remarks>
A6 Series standard type and communication type can not be used Pin14,15,16,18. Please do not connect anything.

8. 회전토크센서(인디케이터2)

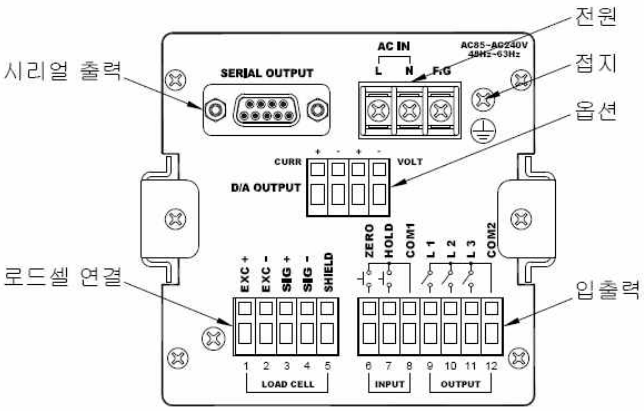

단자 번호	명 칭	내 용
1	EXC +	Load Cell 인가 전압 (+) , 적색 wire
2	EXC -	Load Cell 인가 전압 (-) , 백색 wire
3	SIG +	Load Cell 입력 전압 (+) , 녹색 wire
4	SIG -	Load Cell 입력 전압 (-) , 청색 wire
5	SHIELD	Load Cell 접지

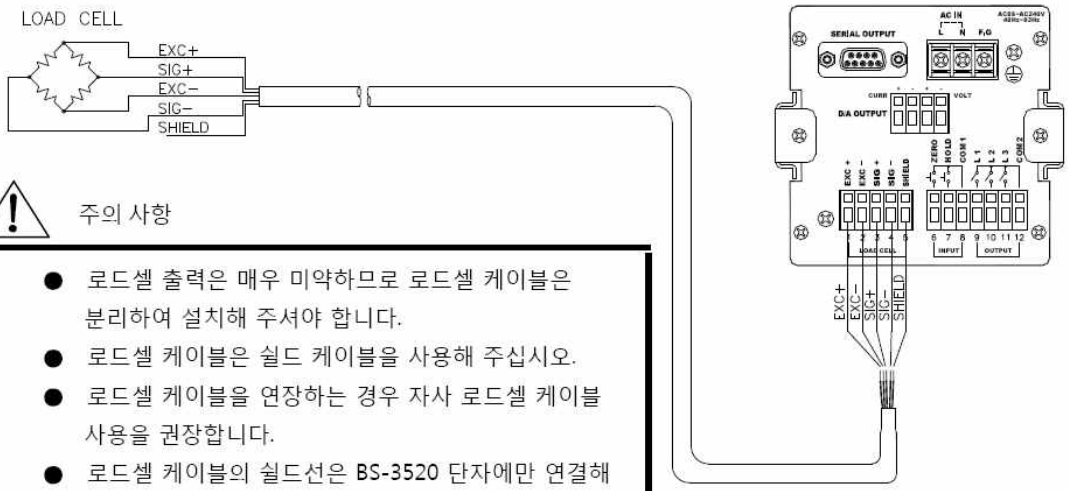

주의 사항

- 로드셀 출력은 매우 미약하므로 로드셀 케이블은 분리하여 설치해 주셔야 합니다.
- 로드셀 케이블은 쉴드 케이블을 사용해 주십시오.
- 로드셀 케이블을 연장하는 경우 자사 로드셀 케이블 사용을 권장합니다.
- 로드셀 케이블의 쉴드선은 BS-3520 단자에만 연결해 주십시오.

RS-232C 사용시

Pin No.	Signal name	Direction	Description
2	TXD	Output	Transmit data
3	RXD	Input	Receive data
5	SG	-	Signal ground
Others			No connection
Casing			Shield

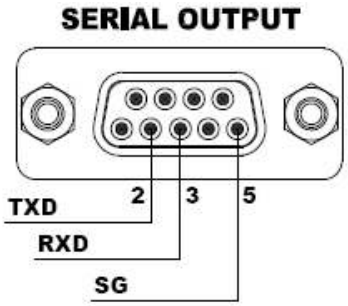

9. 로드셀(인디케이터1)

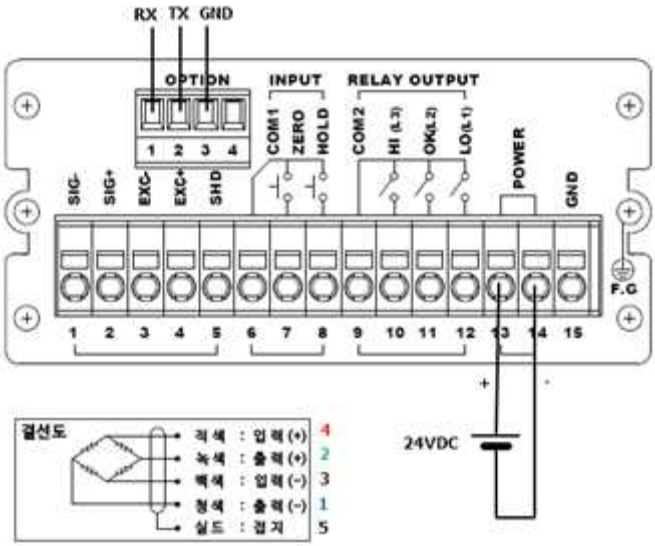
RX TX GND
OPTION
INPUT
RELAY OUTPUT
COM1
ZERO
HOLD
COM2
HI (L-3)
OK(L-2)
LO(L-1)
POWER
GND
SIG-
SIG+
EXC-
EXC+
SHD
F.G
1 2 3 4 5 6 7 8 9 10 11 12 13 14 15
24VDC
결선도
적색 : 입력(+) 4
녹색 : 출력(+) 2
백색 : 입력(-) 3
청색 : 출력(-) 1
실드 : 접지 5

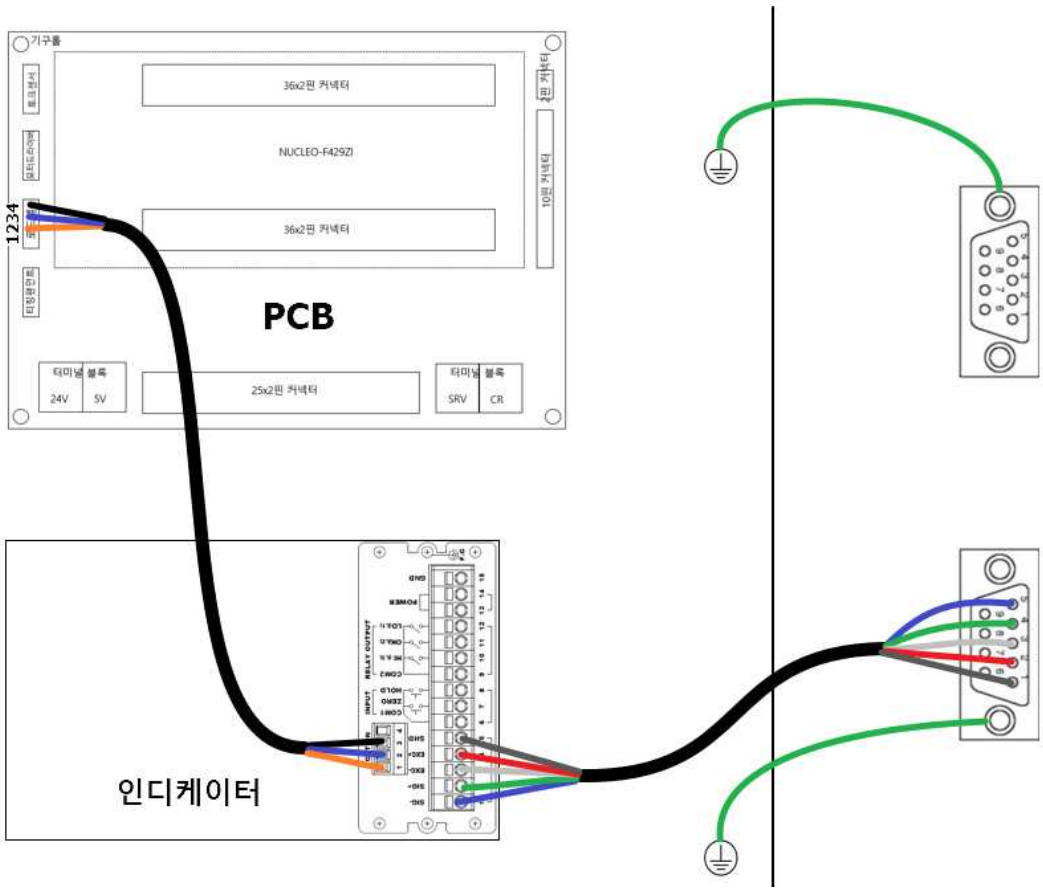
기구물
36x2핀 커넥터
NUCLEO-F429ZI
36x2핀 커넥터
2핀 커넥터
10핀 커넥터
1234
PCB
터미널 블록
24V
5V
25x2핀 커넥터
터미널 블록
SRV
CR
인디케이터

10. 리니어액츄에이터(모터드라이버)

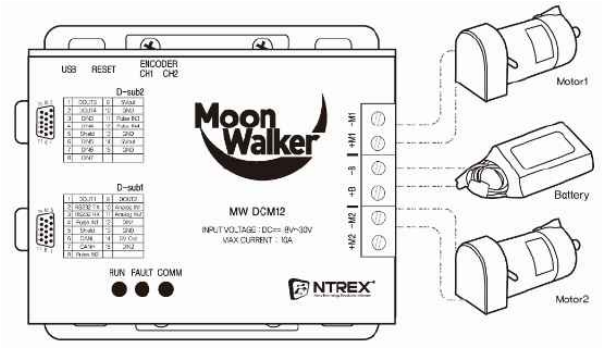

그림 1 전원 및 모터 연결

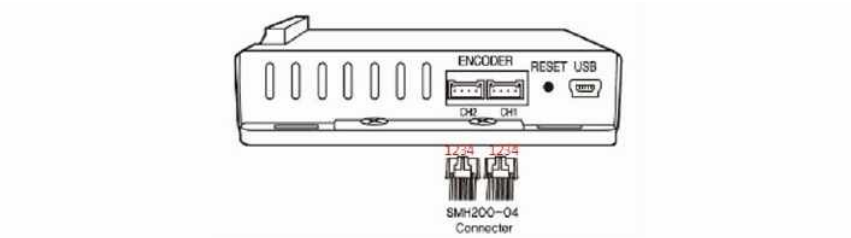

그림 3 엔코더 커넥터 연결

	Motor 2 Encoder	Motor 1 Encoder
1	Motor 2 VCC	Motor 1 VCC
2	Motor 2 Encoder A	Motor 1 Encoder A
3	Motor 2 Encoder B	Motor 1 Encoder B
4	Motor 2 GND	Motor 1 GND

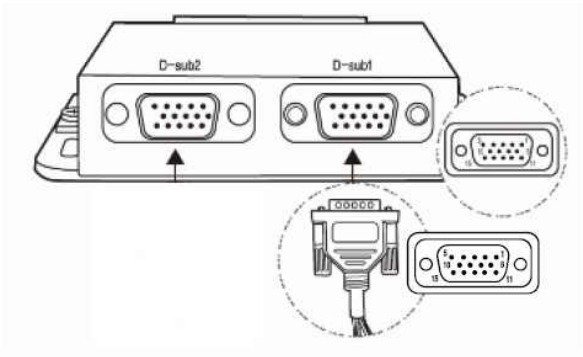

그림 4 D-Sub 1 커넥터 연결

Pin	Power	COM	DOUT	DIN	Ana	Pulse	Default Config
1			DOUT1				Unused
2		TxData					RS-232 Tx
3		RxData					RS-232 Rx
4						RC1	Unused
5	Shield						
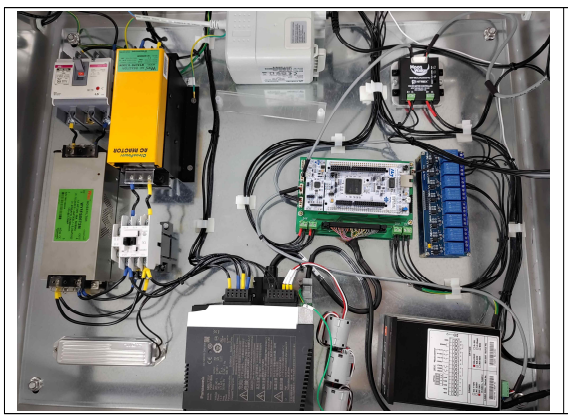
11. 실제작품