µC Serial I/O Examples

Microcontroller	UARTs	SPI	I²C	TWI	SSC	USB	Network
68HC11A8	1	✓					
PIC18F6520	2	✓	✓				
eZ80F91	2	✓	✓				Ethernet
ATMega128	2	✓		✓			
AT91RM9200	4	✓		✓	3	2	Ethernet
STM32WB55	2	2	2		2	1	BLE
CC2652R1	2	✓	2		2		BLE

68HC11A8

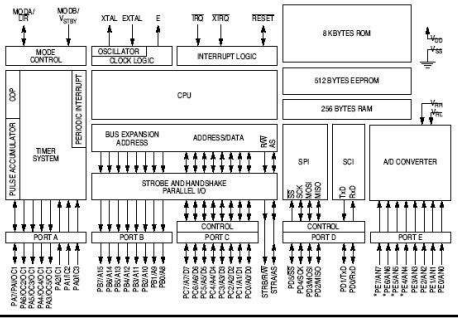

Asynchronous Serial I/O

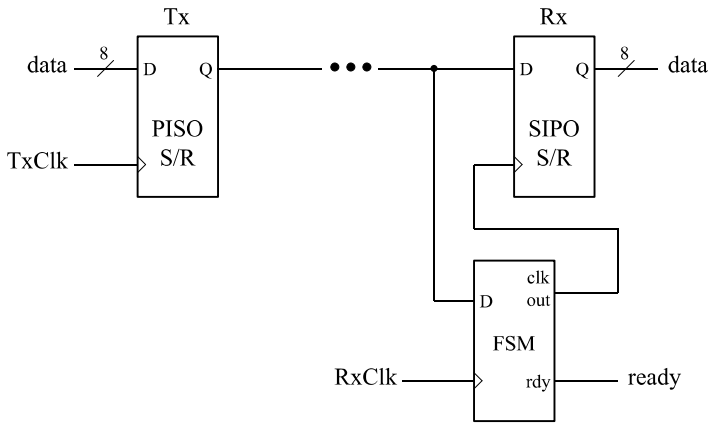

Examples:
- RS-232
- Ethernet
- Wi-Fi
- Bluetooth

Asynchronous Serial I/O Standards - RS-232

Voltage Levels

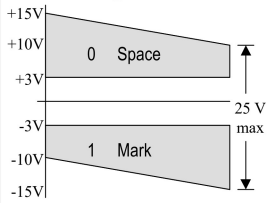

DB-25 Connector

Source	Signal	Pin
DTE	Secondary Transmitted Data	14
DCE	DCE Tran. Sig. Elem. Timing	15
DCE	Secondary Received Data	16
DCE	Receiver Signal Element Timing	17
---	undefined	18
DTE	Secondary Request to Send	19
DTE	Data Terminal Ready (DTR)	20
DTE	Signal Quality Detector	21
DCE	Ring Indicator (RI)	22
either	Data Signal Rate Selector	23
DTE	DTE Tran. Sig. Elem. Timing	24
---	undefined	25

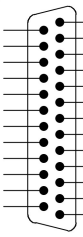

Pin	Signal	Source
1	Protective Ground	---
2	Transmitted Data (TxD)	DTE
3	Received Data (RxD)	DCE
4	Request to Send (RTS)	DTE
5	Clear to Send (CTS)	DCE
6	Data Set Ready (DSR)	DCE
7	Signal Ground	---
8	Received Line Signal Detector	DCE
9	reserved	---
10	reserved	---
11	undefined	---
12	Secondary Rec. Line Sig. Det.	DCE
13	Secondary Clear to Send	DCE

Transmission Format

General Format

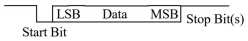

Transmitting an ASCII ‘A’

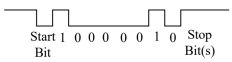

DE-9 Connector

Source	Signal	Pin
DCE	Data Set Ready (DSR)	6
DTE	Request to Send (RTS)	7
DCE	Clear to Send (CTS)	8
DCE	Ring Indicator (RI)	9

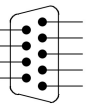

Pin	Signal	Source
1	Data Carrier Detect (DCD)	DCE
2	Received Data (RxD)	DCE
3	Transmitted Data (TxD)	DTE
4	Data Terminal Ready (DTR)	DTE
5	Signal Ground	---

Asynchronous Serial I/O Hardware

Receive Shift Register (SIPO)

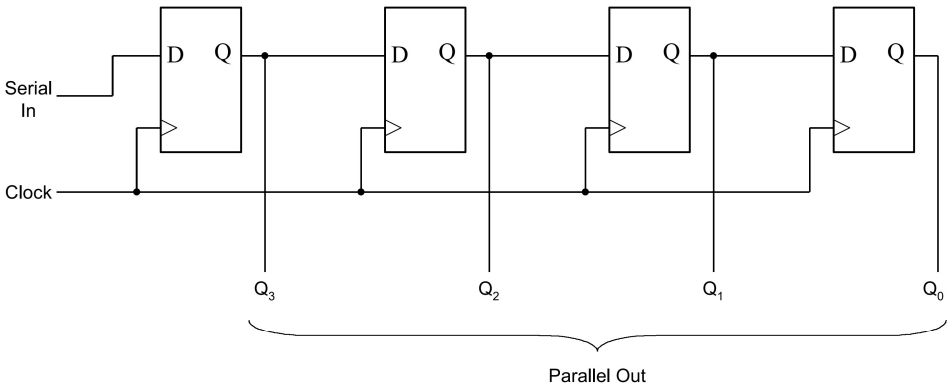

Asynchronous Serial I/O Hardware

Receive Shift Register (SIPO)

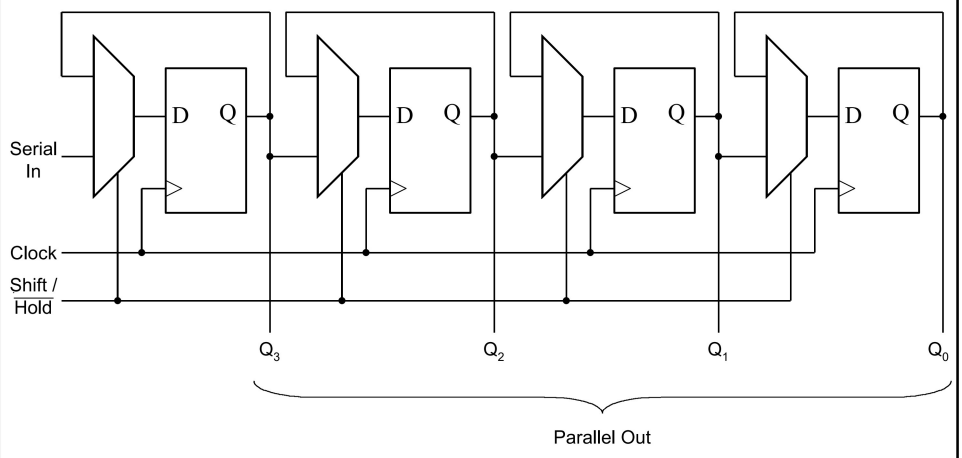

Asynchronous Serial I/O Hardware

Transmit Shift Register (PISO)

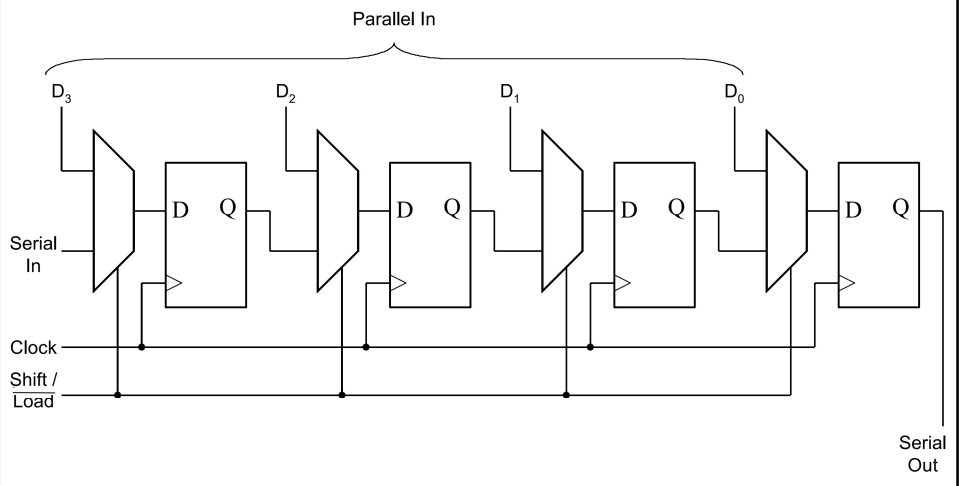

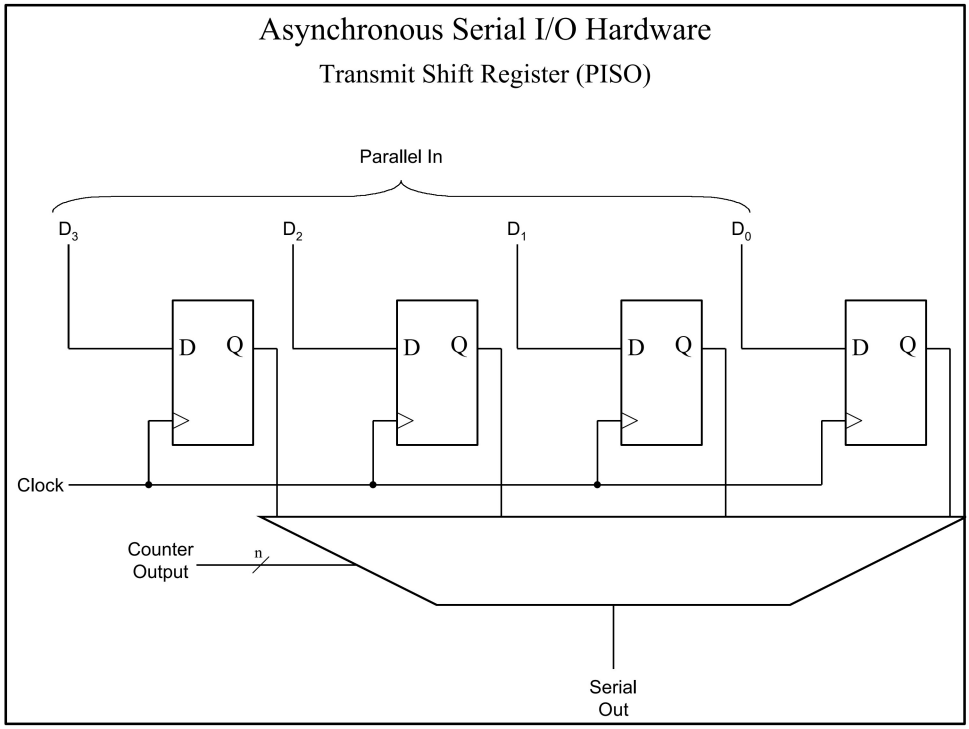
Asynchronous Serial I/O Hardware
Transmit Shift Register (PISO)
Parallel In
D3
D2
D1
D0
D Q
D Q
D Q
D Q
Clock
Counter Output
n
Serial Out

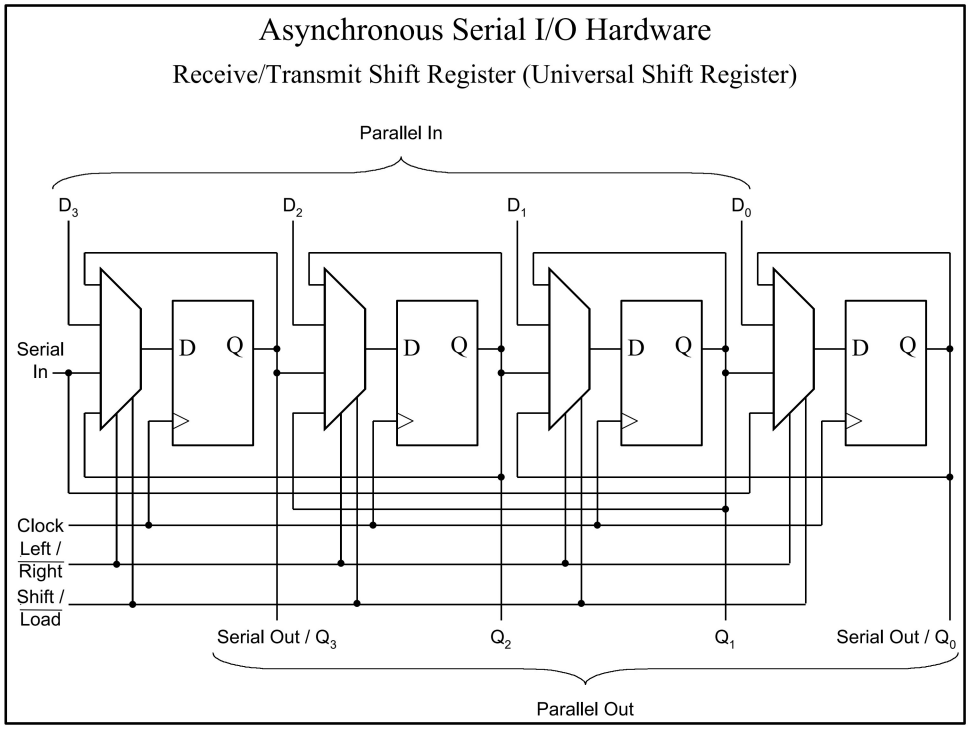
Asynchronous Serial I/O Hardware
Receive/Transmit Shift Register (Universal Shift Register)
Parallel In
D3
D2
D1
D0
Serial In
D Q
D Q
D Q
D Q
Clock
Left / Right
Shift / Load
Serial Out / Q3
Q2
Q1
Serial Out / Q0
Parallel Out

Asynchronous Serial I/O Hardware

Receiver FSM (RxCLK = 8 × TxCLK)

Transmission Format

General Format

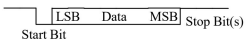

Transmitting an ASCII 'A'

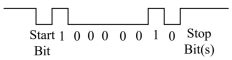

Syncing Rx with Tx

TxCLK

Serial Data

RxCLK = 8 × TxCLK

Asynchronous Serial I/O Hardware

Receiver FSM (RxCLK = 8 × TxCLK)

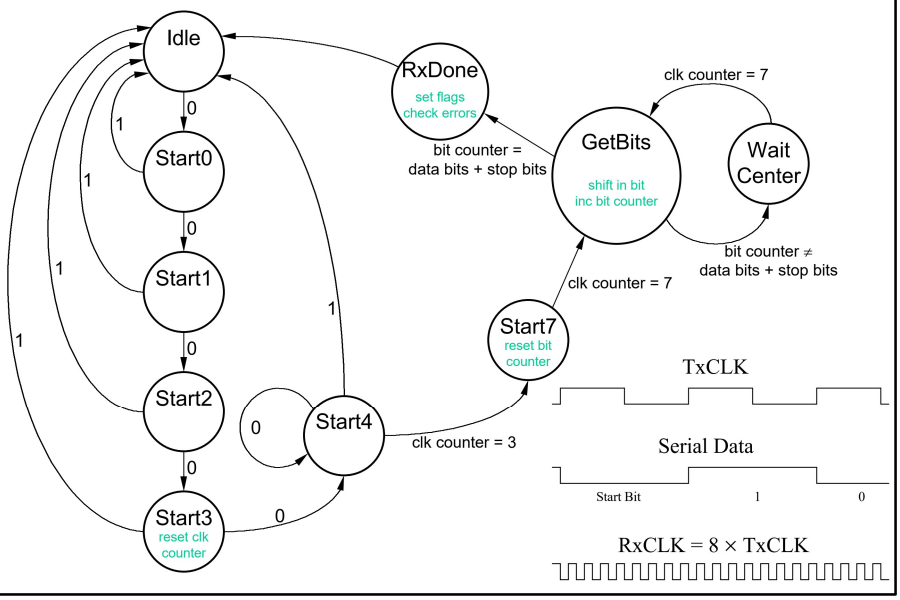

Bit Synchronous Serial I/O

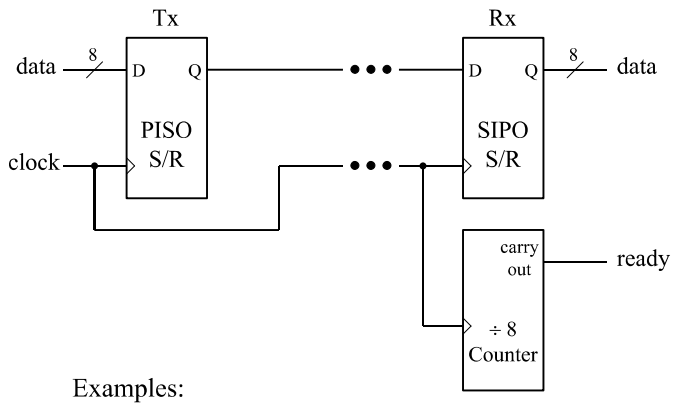

Examples:
- SPI
- TWI
- I^2C
- I^2S

SPI

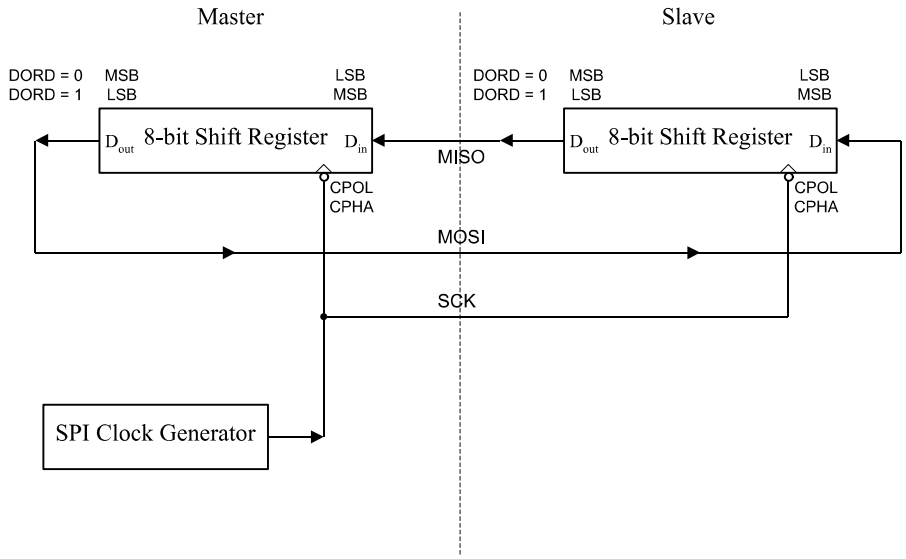

SPI Clocking

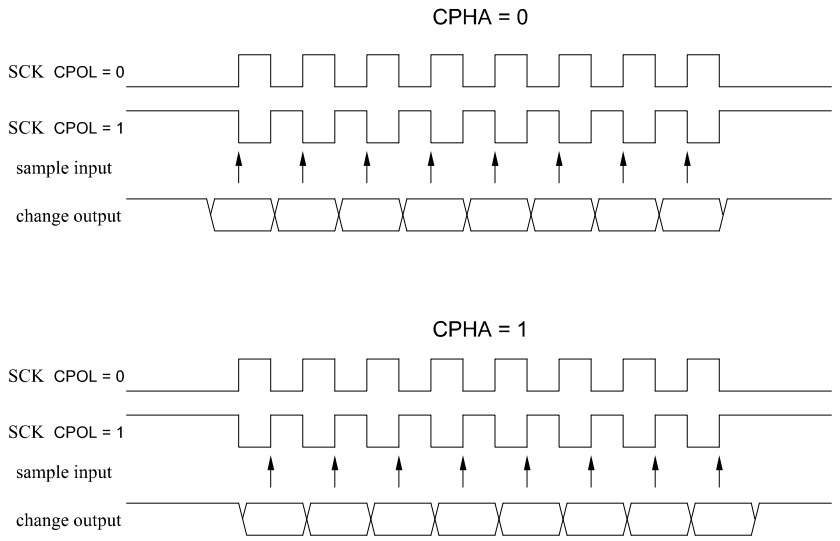

SPI Master Hardware

Conceptual Block Diagram

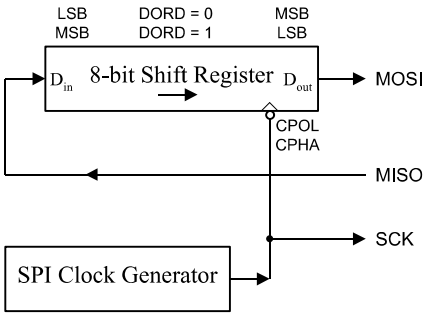

Circuit Block Diagram

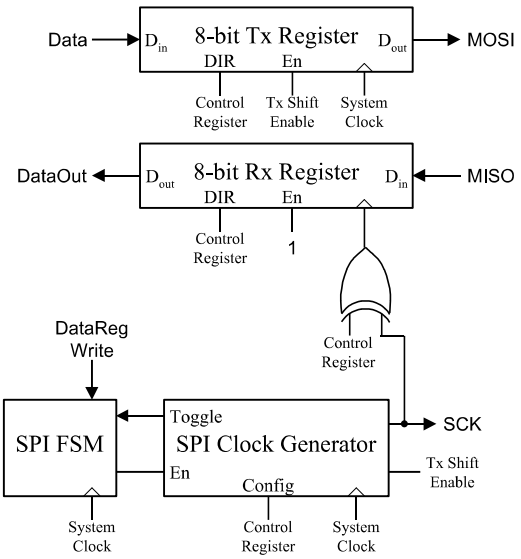

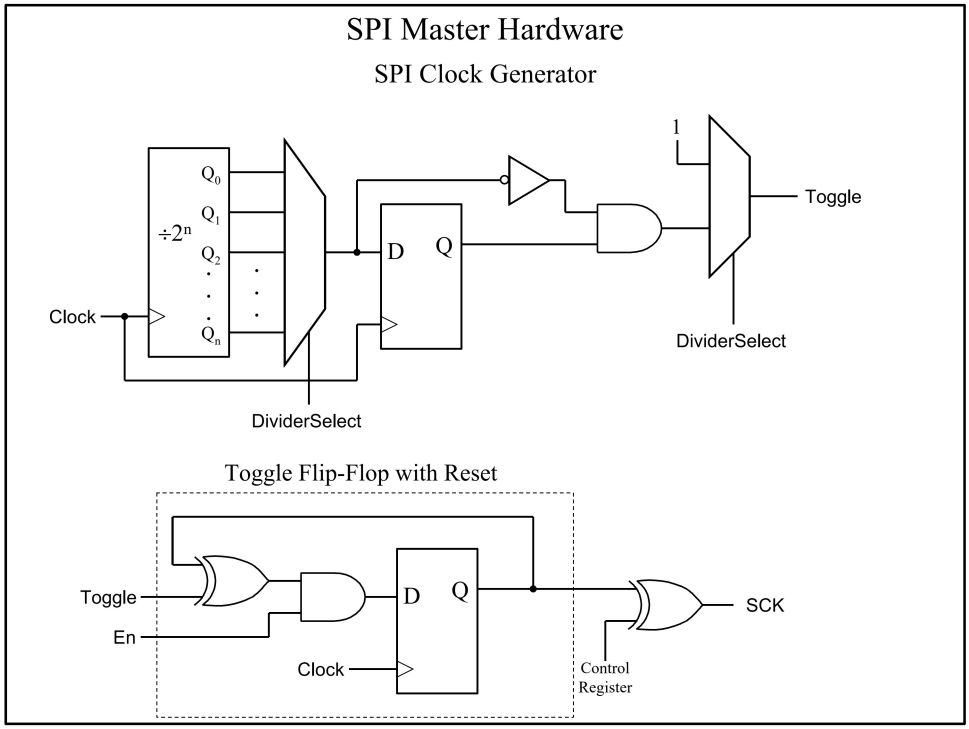
SPI Master Hardware
SPI Clock Generator
1
Toggle
÷2n
Q0
Q1
Q2
Qn
D
Q
Clock
DividerSelect
DividerSelect
Toggle Flip-Flop with Reset
Toggle
En
D
Q
Clock
SCK
Control
Register