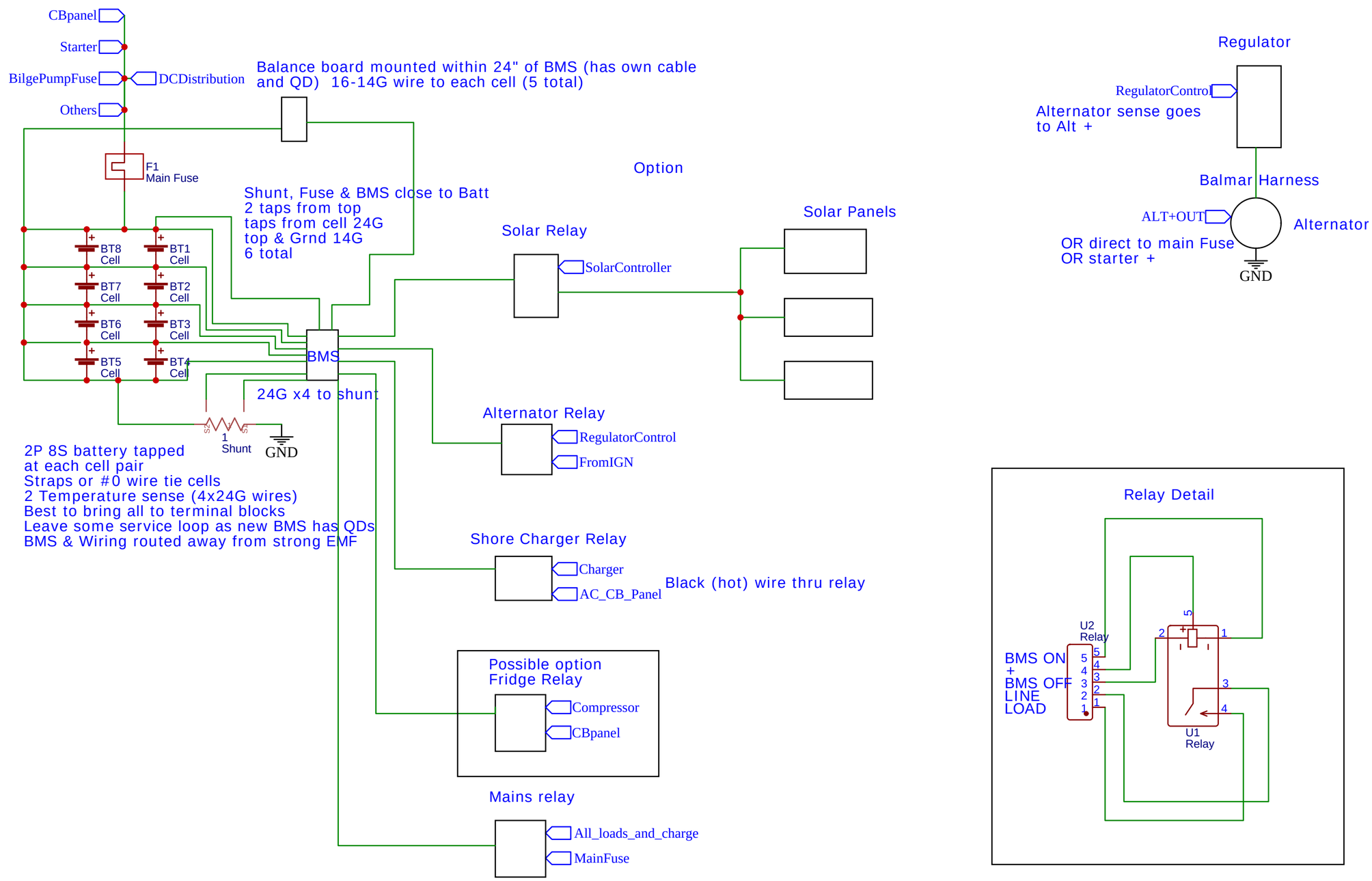

All Relays get 3 wire 16-14G From BMS to relay.
(ON , OFF , +)
All relays need + source. Must be tied together
with TOP term of BMS thru a 10A fuse. Any point before F1 around batt OK.

TITLE: Overview of Install	REV: 1.0
EasyEDA	Company: Skylark / Sheet: 1/2
	Date: 2024-06-03 Drawn By: Steve Schroeder

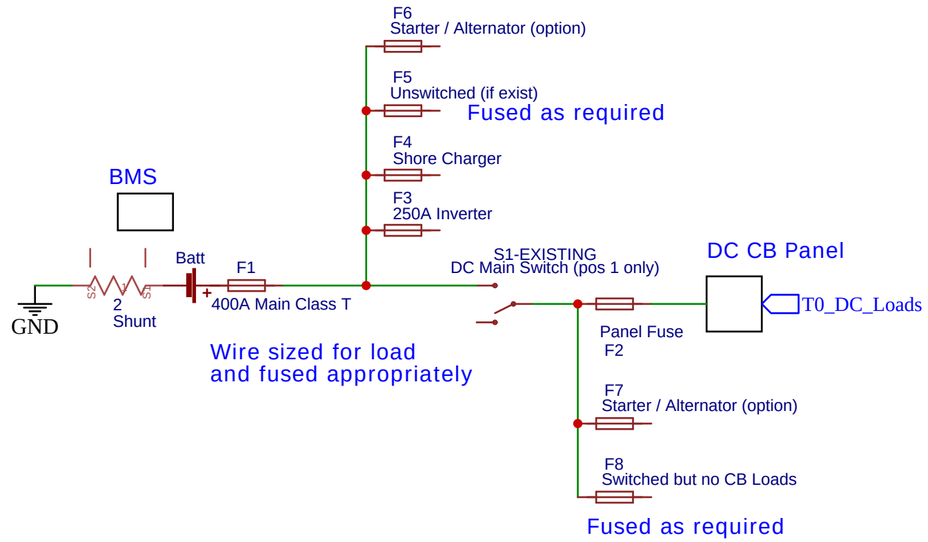

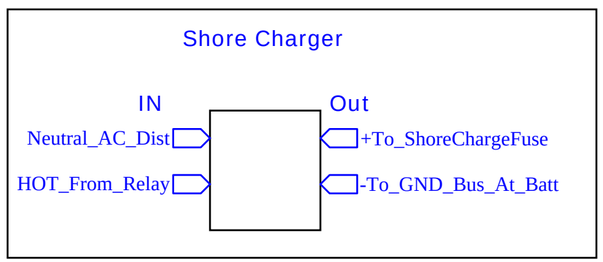

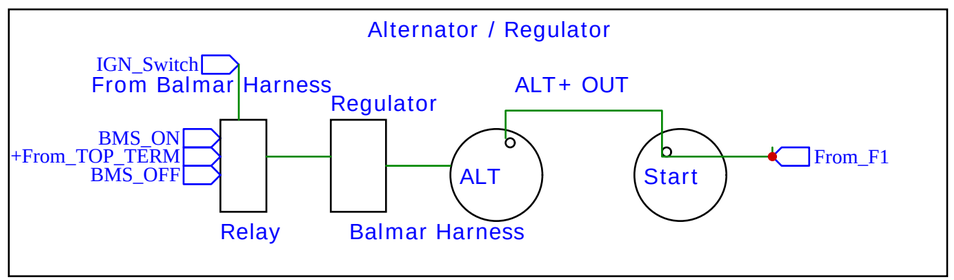

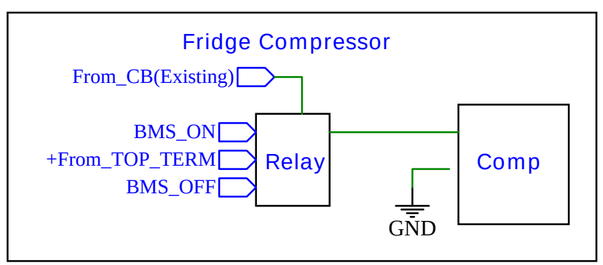

TITLE: Typical Fusing		REV: 1.0
EasyEDA	Company: Skylark	Sheet: 2/2
	Date: 2024-06-04 Drawn By: Steve Schroeder	