T1

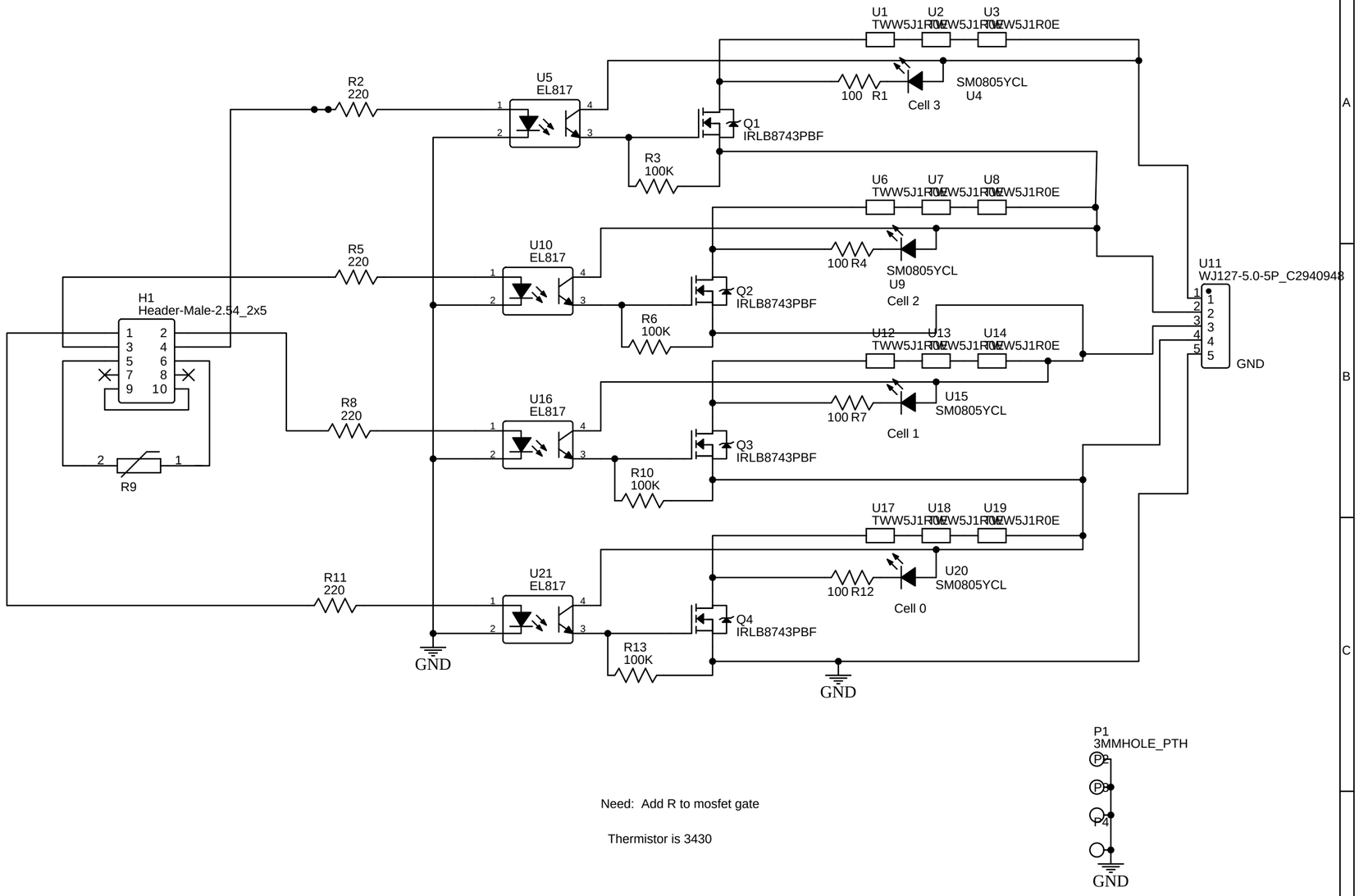

Need: Add R to mosfet gate

Thermistor is 3430

4/11/22 deleted unesasary battery connections

TITLE: Balance Board		REV: 1.01
EasyEDA	Company: S/V Skylark	Sheet: 1/1
	Date: 2022-02-14 Drawn By: Steve Schroeder	